No.	DATE	DESCRIPTION	REV	REMARK : RoHS REQUIREMENT APPLIED (符合RoHS)	DATE	DRAWING NO.

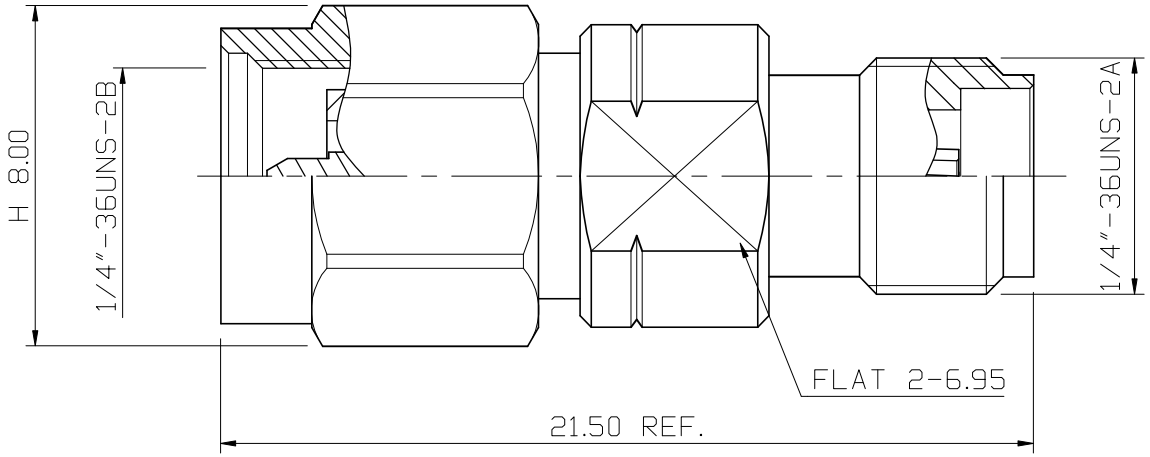

Electrical Specification:
1.Impedance : 50 ohm
2.Frequency Range : DC ~ 34 GHz
3.VSWR : 1.25 max.

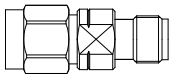

S 1 : 1

NO.	Description	Unit	Materials	Finish	Drawing No.
–	shell	1	SUS303	passivated	
–	gasket	1	silicone	red	
–	c ring	1	steel	passivated	
–	contact pin	1	beryllium copper	gold (3u")	
–	body b	1	SUS303	passivated	
–	insulator	1	PEI	nature	
–	body a	1	SUS303	passivated	

DIMENSIONS ARE IN MILLIMETERS

UNLESS OTHRWISE PECIFIED TOLERANCES
(一般公差)
0.5~6 = ±0.2
>6~30 = ±0.4
>30~120 = ±0.6
>120~315 = ±1
>315~1000 = ±1.6
ANGLES(角度) = ±5°

SCALE 5 : 1 UNIT MM

CHECKED

DRAWN *Jordan*

DATE 2024. 12. 05

雅鈦企業有限公司
Aec Connectors Co., Ltd.

TITLE
2.92mm Male TO 3.5mm Female ADAPTOR

DRAWING NO.
ADT-3040S-KS15IP-3.525IP

FILE NO. DRAWING\RF\ADTPTOR\ADT-3040S-KS15IP-3.525IP