No.	DATE	DESCRIPTION	REV	REMARK : RoHS REQUIREMENT APPLIED (符合RoHS)	DATE	DRAWING NO.

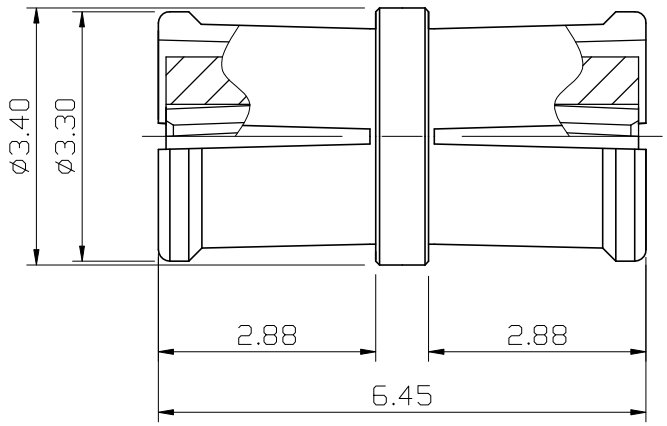

Electrical Specification:
1.Impedance : 50 ohm
2.Frequency Range : DC ~40 GHz
3.VSWR : 1.2:1 max. @DC ~ 18 GHz
1.3:1 max. @18 ~ 26.5 GHz
1.5:1 max. @26.5 ~ 40 GHz

S 1 : 1

NO.	Description	Unit	Materials	Finish	Drawing No.
–					
–					
–					
–					
–	contact pin	1	beryllium copper	gold (3u")	
–	insulator	1	PTFE	white	
–	body	1	beryllium copper	gold	

DIMENSIONS ARE IN MILLIMETERS

UNLESS OTHRWISE PECIFIED TOLERANCES
(一般公差)
0.5~6 = ±0.2
>6~30 = ±0.4
>30~120 = ±0.6
>120~315 = ±1
>315~1000 = ±1.6
ANGLES(角度) = ±5°

SCALE 10 : 1 UNIT MM

CHECKED

DRAWN *Owen*

DATE 2024. 11. 14

雅鈦企業有限公司
Aec Connectors Co., Ltd.

TITLE
SMP Female TO SMP Female ADAPTOR

DRAWING NO.
ADT-3037S-SP25TG-SP25TG

FILE NO. DRAWING\RF\ADT\ADT-3037S-SP25TG-SP25TG