No.	DATE	DESCRIPTION	REV	REMARK : RoHS REQUIREMENT APPLIED (符合RoHS)	DATE	DRAWING NO.

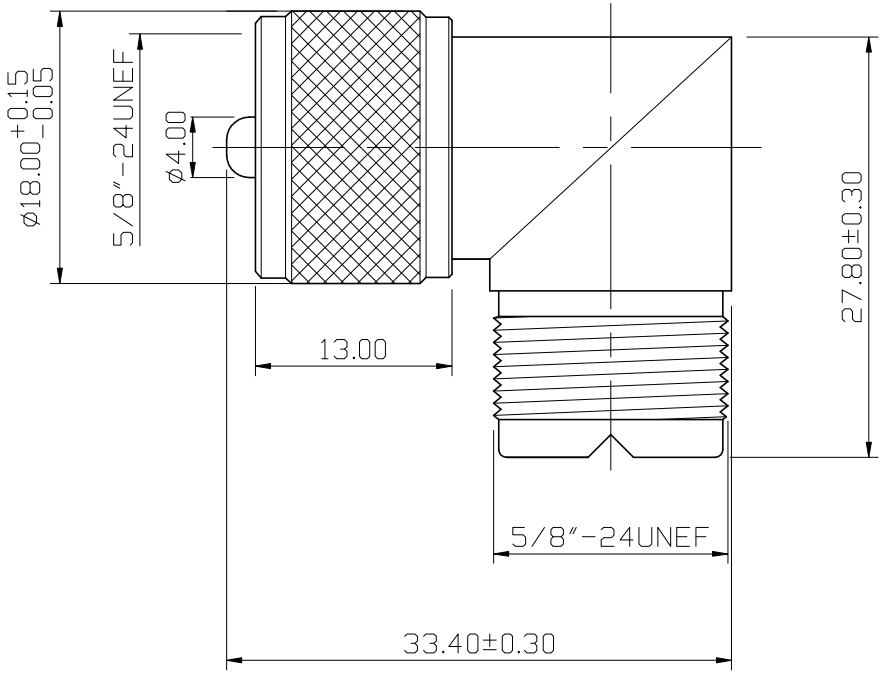

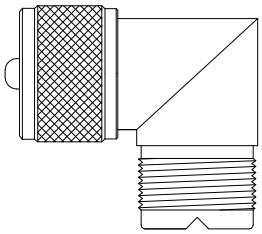

S 1 : 1

NO.	Description	Unit	Materials	Finish	Drawing No.
–	washer	1	brass	nickel	
–	shell	1	brass	nickel	
–	insulator	1	POM	none	
–	insulator	1	POM	none	
–	contact pin	1	brass	gold	
–	contact pin	1	brass	gold	
–	body	1	zinc	nickel	

DIMENSIONS ARE IN MILLIMETERS

UNLESS OTHRWISE PECIFIED TOLERANCES
(一般公差)
0.5~6 = ±0.2
>6~30 = ±0.4
>30~120 = ±0.6
>120~315 = ±1
>315~1000 = ±1.6
ANGLES(角度) = ±5°

SCALE 2 : 1 UNIT MM

CHECKED

DRAWN *Jordan*

DATE 2017. 06. 13

雅鈦企業有限公司
Aec Connectors Co., Ltd.

TITLE
RIGHT ANGEL UHF MALE TO FEMALE

DRAWING NO.
ADT-2712R-US10DA-US20DA

FILE NO. DRAWING\RF\ADT\ADT-2712R-US10DA-US20DA