No.	DATE	DESCRIPTION	REV
2	2014. 04. 21	Material for change 材質變更	B
3	2025. 12. 02	Drawing updated 圖面更新	C
4	2026. 03. 18	Drawing updated 圖面更新	D

REMARK : RoHS REQUIREMENT APPLIED
(符合RoHS)

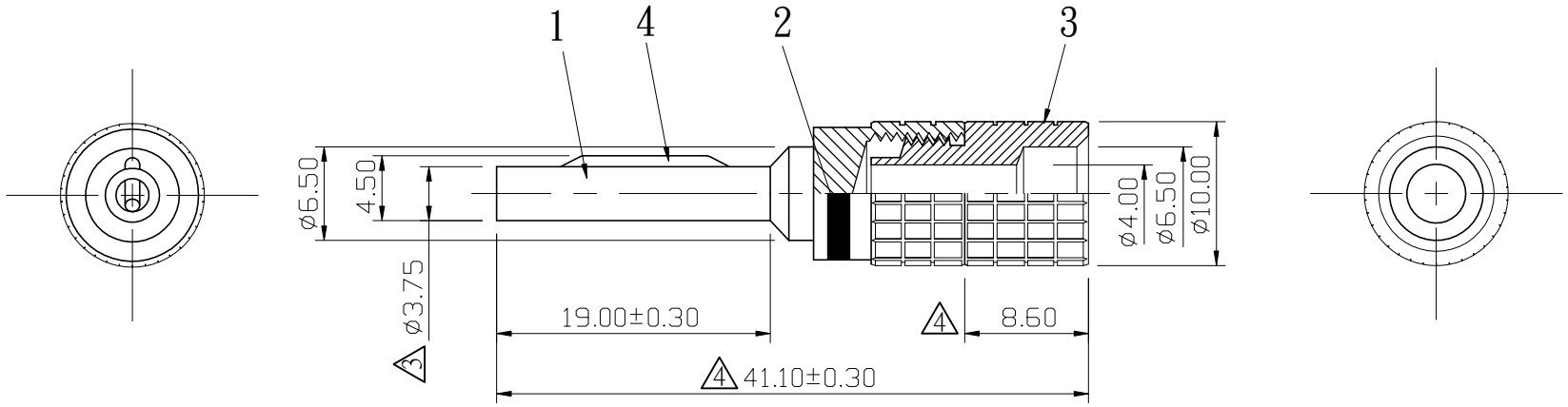

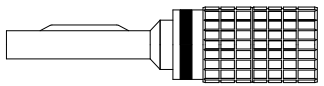

S 1：1

NO.	Description	Unit	Materials	Finish	Drawing No.
7					
6					
5					
4	spring	1	steel	gold	
3	headlock	1	brass	gold	
2	color ring	1	painting	red/black/blue white/yellow/green	
1	body	1	brass	gold	

DIMENSIONS ARE IN MILLIMETERS

UNLESS OTHRWISE PECIFIED TOLERANCES
(一般公差)
0.5~6 = ±0.2
>6~30 = ±0.4
>30~120 = ±0.6
>120~315 = ±1
>315~1000 = ±1.6
ANGLES(角度) = ±5°

SCALE 2：1 UNIT MM

CHECKED

DRAWN *Andy*

DATE 2010. 07. 30

雅鈦企業有限公司
Aec Connectors Co., Ltd.

TITLE BANANA PLUG

DRAWING NO. BP-206GG-RD/BK/BE/WE/YW/GN-6.5

FILE NO. DRAWING\AUDIO\BP\BP-206GG-RD-BK-BE-WE-YW-GN-6.5