No.	DATE	DESCRIPTION	REV	REMARK : RoHS REQUIREMENT APPLIED (符合RoHS)	DATE	DRAWING NO.

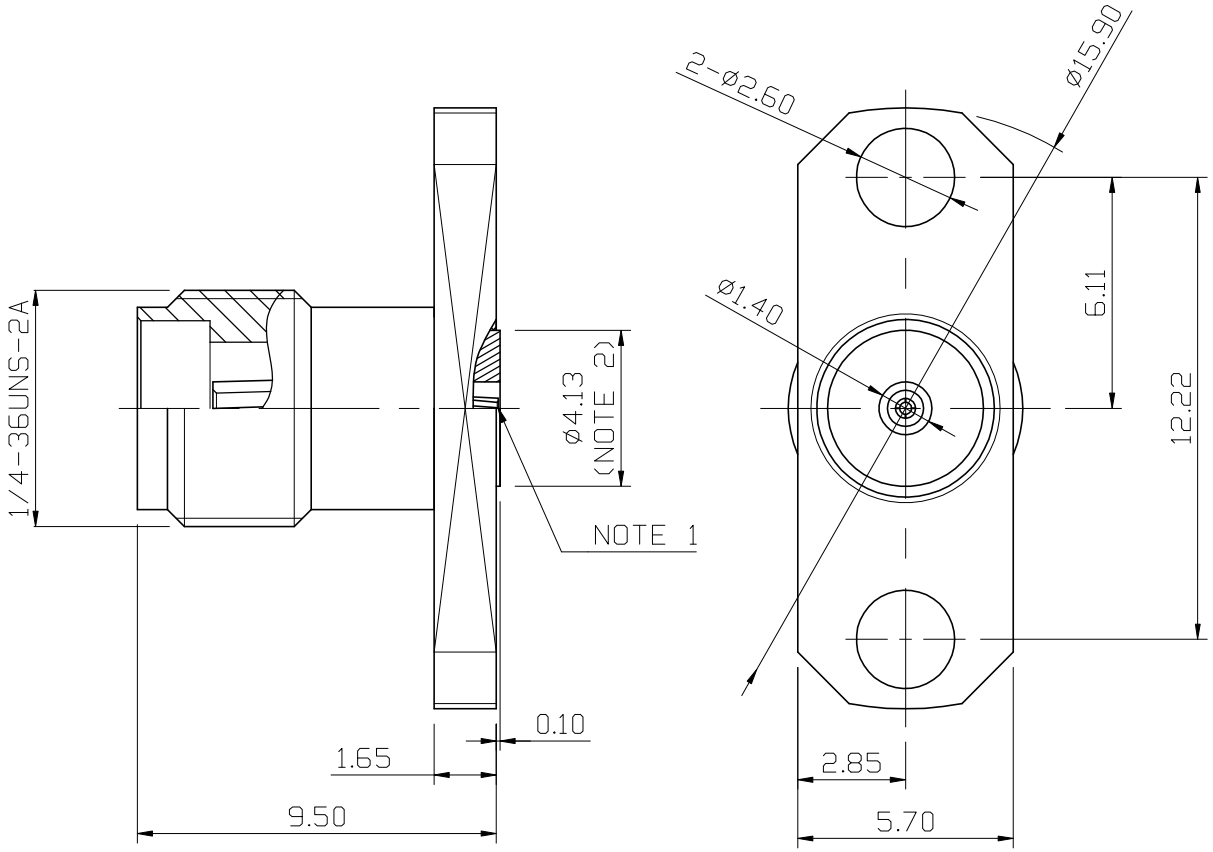

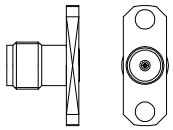

S 1 : 1

Electrical Specification:
1.Impedance : 50 ohm
2.Frequency Range : DC ~ 34 GHz
3.VSWR : 1.2 max.

NOTE :
1.Accept Pin Zize Ø0.38
2.Separate Metal Contact Ring

NO.	Description	Unit	Materials	Finish	Drawing No.
-					
-					
-	body c	1	brass	gold	
-	body b	1	SUS303	passivated	
-	contact pin	1	beryllium copper	gold (3u")	
-	insulator	1	PEI	nature	
-	body a	1	SUS303	passivated	

DIMENSIONS ARE IN MILLIMETERS

UNLESS OTHRWISE PECIFIED TOLERANCES
(一般公差)
0.5~6 = ±0.2
>6~30 = ±0.4
>30~120 = ±0.6
>120~315 = ±1
>315~1000 = ±1.6
ANGLES(角度) = ±5°

SCALE 5 : 1 UNIT MM

CHECKED

DRAWN *Jordan*

DATE 2026. 01. 08

雅鈦企業有限公司
Aec Connectors Co., Ltd.

TITLE 3.5mm FEMALE 2-HOLE FLANGE (ACCEPTS 0.38MM PIN)

DRAWING NO. 3.5-1002PIG-SE0025

FILE NO. DRAWING\RF\3.5\3.5-1002PIG-SE0025