| No. | DATE | DESCRIPTION | REV | REMARK : RoHS REQUIREMENT APPLIED (符合RoHS) | DATE | DRAWING NO. |
|---|---|---|---|---|---|---|
| | | | | | | |

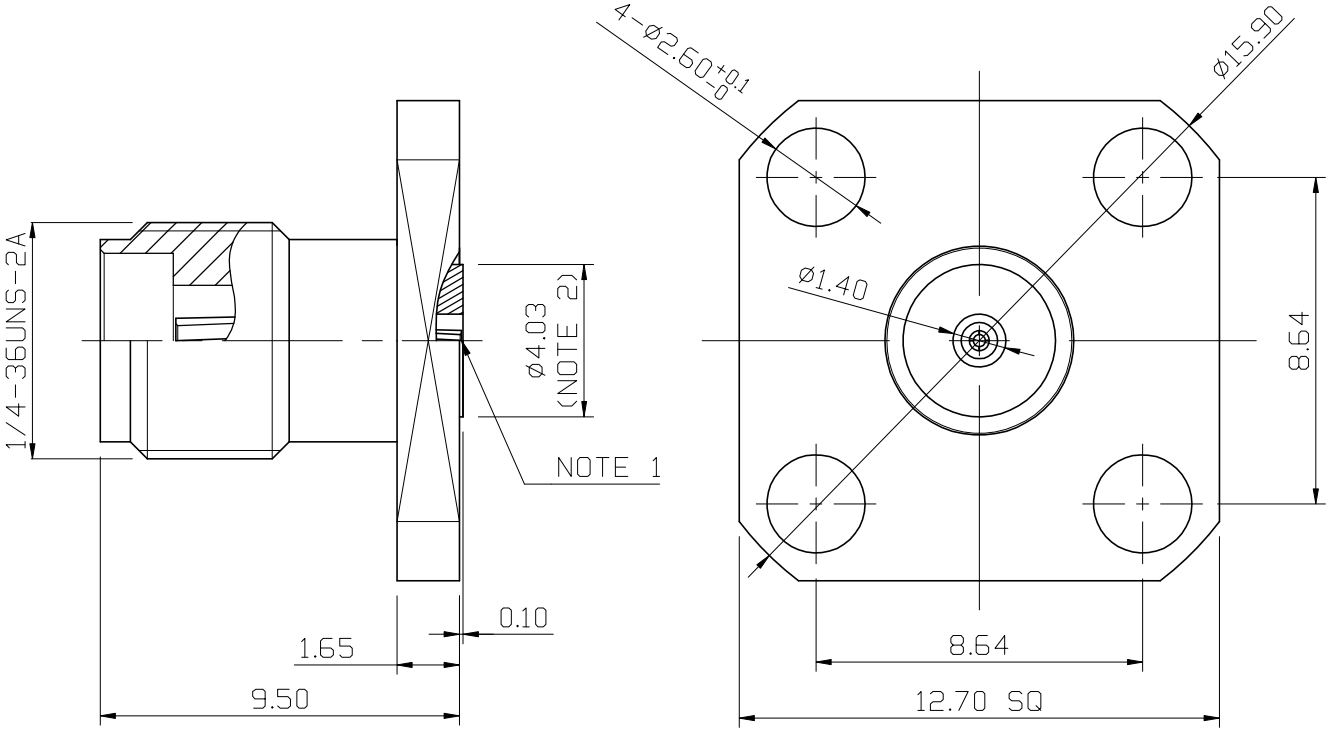


Electrical Specification:
1.Impedance : 50 ohm
2.Frequency Range : DC ~ 40 GHz
3.VSWR : 1.2 max.

NOTE :
1.Accept Pin Zize Ø0.38
2.Separate Metal Contact Ring

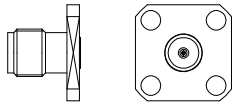

S 1 : 1

| NO. | Description | Unit | Materials | Finish | Drawing No. |
|---|---|---|---|---|---|
| - | | | | | |
| - | | | | | |
| - | body c | 1 | brass | gold | |
| - | body b | 1 | SUS303 | passivated | |
| - | contact pin | 1 | beryllium copper | gold (3u") | |
| - | insulator | 1 | PEI | nature | |
| - | body a | 1 | SUS303 | passivated | |

DIMENSIONS ARE IN MILLIMETERS

UNLESS OTHRWISE PECIFIED TOLERANCES
(一般公差)
0.5~6 = ±0.2
>6~30 = ±0.4
>30~120 = ±0.6
>120~315 = ±1
>315~1000 = ±1.6
ANGLES(角度) = ±5°

SCALE 5 : 1 UNIT MM

CHECKED

DRAWN *Jordan*

DATE 2025. 10. 03

雅鈦企業有限公司
Aec Connectors Co., Ltd.

TITLE 2.92mm FEMALE 4-HOLE FLANGE (ACCEPTS 0.38MM PIN)

DRAWING NO. KS-1011PIG-SE0025

FILE NO. DRAWING\RF\KS\KS-1011PIG-SE0025