No.	DATE	DESCRIPTION	REV	REMARK : RoHS REQUIREMENT APPLIED (符合RoHS)	DATE	DRAWING NO.

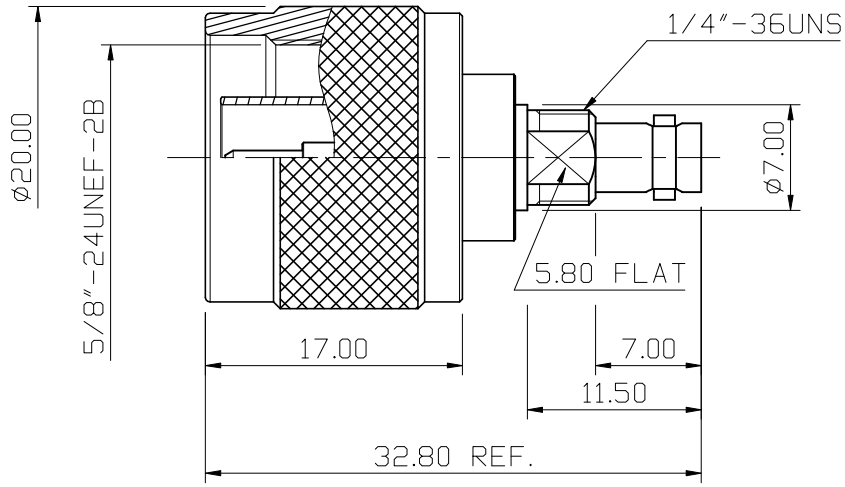

Electrical Specification :
1.Impedance : 75 ohm
2.Frequency Range : DC~12 GHz
3.VSWR. : 1.15 max.@DC~6GHz
1.20 typ.@6~12GHz

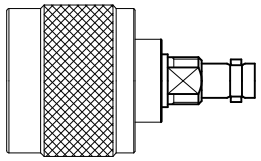

S 1 : 1

NO.	Description	Unit	Materials	Finish	Drawing No.
–	shell	1	brass	nickel	
–	gasket	1	silicone	red	
–	C ring	1	brass	none	
–	body c	1	brass	nickel	
–	insulator b	1	PTFE	white	
–	body b	1	brass	nickel	
–	contact pin	1	beryllium copper	gold(3u")	
–	insulator a	1	PTFE	white	
–	body a	1	brass	nickel	

DIMENSIONS ARE IN MILLIMETERS

UNLESS OTHRWISE PECIFIED TOLERANCES
(一般公差)
0.5~6 = ±0.2
>6~30 = ±0.4
>30~120 = ±0.6
>120~315 = ±1
>315~1000 = ±1.6
ANGLES(角度) = ±5°

SCALE 2 : 1 UNIT MM

CHECKED

DRAWN *Owen*

DATE 2025. 04. 07

雅鈦企業有限公司
Aec Connectors Co., Ltd.

TITLE N MALE TO MICRO BNC FEMALE ADAPTOR

DRAWING NO. ADT-3102S-NS15TA-MOBC25TA

FILE NO. DRAWING\RF\ADT\ADT-3102S-NS15TA-MOBC25TA