&Tradition

Meantime AV29
Anderssen & Voll
2025

Product Fact Sheet

Certified B Corporation

Meantime AV29

Anderssen & Voll

Product description
Lounge chair

Environment
Indoor

Material
Plywood frame, HR foam, polyester wadding, steel, polished or power-coated aluminium. This product has not been treated with any biocides.

Production process
The plywood frame is upholstered with foam and a textile cover. The upholstered cushions are made from HR foam with duvets filled with silicone fibers and attached to the frame with velcro. The armrests are made of a steel construction which is wrapped in hard foam and attached to the frame using a bolt connection. The legs are made of cast aluminium which is either polished or powder-coated.

Variants
Warm Black or Polished Aluminium legs
Available in a variety of fabrics and COM

COM - Material Consumption
Fabric usage: 3.5 meters based on 140 cm roll
Leather usage: 8.2 m2
COM must be approved by &Tradition to ensure suitability for upholstery

Dimensions
W: 105 cm / 41 in
H: 70 cm / 28 in
D: 85 cm / 33 in
Seat H: 41 cm / 16 in
Seat D: 56 cm / 22 in
Armrest H: 53 cm / 21 in

Weight
25 kg

Certifications

FSC® Mix 70%

Gliders
Plastic gliders as standard

Manufacturer
Produced in Poland by Trioline Polska Sp. z o. o.

Cleaning Instructions
Please see our Maintenance & Care instructions here

→ Ecriture 0210

→ Fiord 0571

→ Hallingdal 0220

→ Noble Aniline Leather Cognac

&Tradition®

Recycling & Disassembly

Meantime AV29-AV31

Recycling
The Meantime lounge chair is built to last, and we hope that your Meantime will serve you for many years. The lounge chair is covered with an high quality fabric which can be separated from its base.
All fabric, foam, wooden and metal parts can be separated and delivered to a suitable recycling station.

Spare parts
To purchase spare parts for your Meantime lounge chair, please write to our sales support team at with your query.

5 year warranty
&Tradition provides a 5-year warranty with every Meantime lounge chair, which covers faults which were present at the time of purchase, or which have occurred as a result of a manufacturing defect. The warranty is valid from the date stated on the original invoice.

Safety Precautions
- Do not disassemble alone
- Be aware of the the risk of crushing fingers or other body parts
- The screws might be oiled, so be aware not to get any oil on to the upholstery

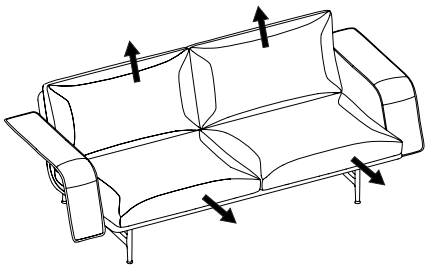

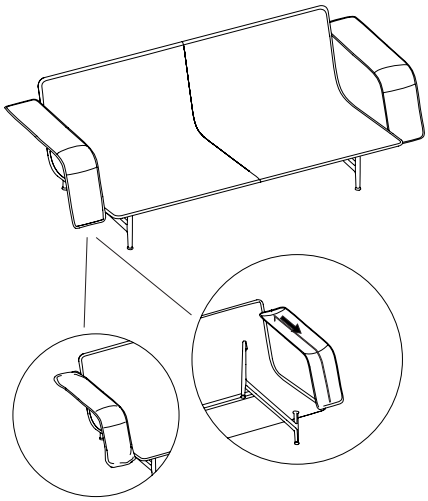

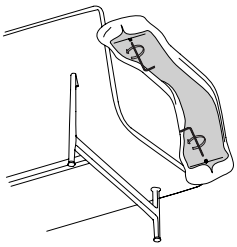

Disassembly

1. Remove seat and back cushions from the sofa before starting the disassembly.

2. Identify the zipper located on the bottom side of the armrests and carefully unzip it to open the fabric. Gently pull the fabric sidewards, partially removing it to expose the internal structure of the armrests.

NB: Don't try to remove the fabric completly before completing step 3 and 4.

3. Insert the Allen key into the top screw on the bottom side of the armrest and turn counterclockwise to remove it. Repeat the process for the bottom screw.

&Tradition®

Recycling & Disassembly

Meantime AV29-AV31

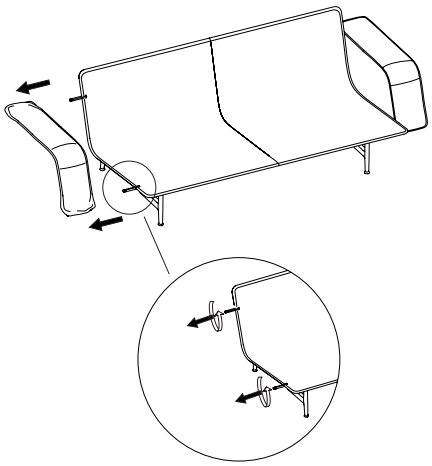

Disassembly

4. Grasp each armrest firmly and gently pull it away from the main frame. If there is any resistance, check for the screws (Step 3) that need to be removed.

5. Using your hands, grasp each metal shaft firmly and turn counterclockwise to unscrew it from the frame. No additional tools should be necessary for this step.

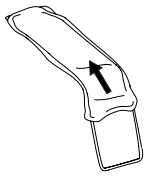

6. With the armrests already detached, carefully finish removing the fabric from the armrest. Once fully seperated, set the fabric aside for recycling or disposal.

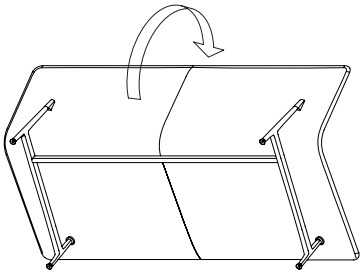

7. To continue the disassembly, flip the sofa upside down. You need assistance of an additional person to safely perform this action.

Recycling & Disassembly

Meantime AV29-AV31

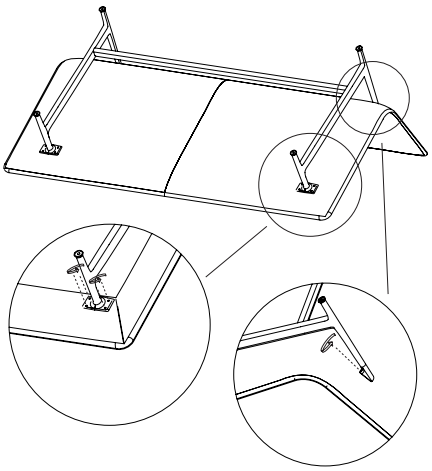

Disassembly

8. Unscrew the 4 screws from each front leg completely, and loosen the screws attached to the backrest.

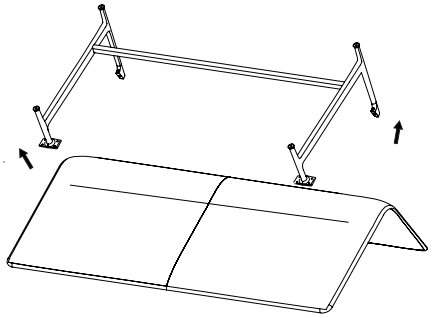

9. Seperate the metal base from the frame.

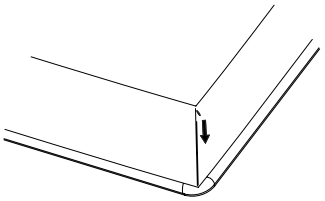

10. Identify the zippers positioned at the backside corners of the seating area. Gently pull the zipper tab to loosen the cover. Repeat this step for the other corner.

Recycling & Disassembly

Meantime AV29-AV31

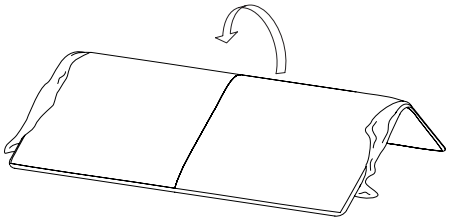

Disassembly

11. Proceed with the removal of the textile cover from the seating area. Please be aware that you may need to flip the frame once more to procceed.

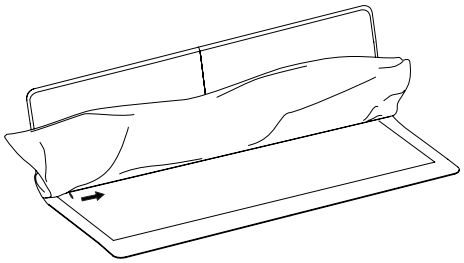

12. Locate and unzip the zipper in the seat bend to completely release the cover from the frame.

NB: To clean the cover, you need to stop at this step. After cleaning, follow the steps in reverse order to reassemble the sofa. If you wish to fully disassemble the sofa into its components, please continue with the following steps.

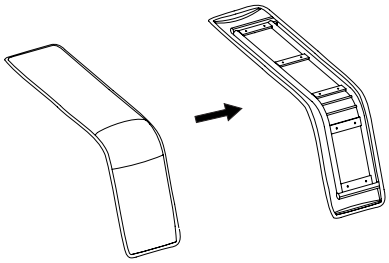

13. Carefully peel away the foam from the metal frame. You may need to gently pry it off or use a tool like a putty knife to separate stubborn areas. Dispose both the foam and the metal frame in accordance with local recycling or waste disposal guidelines.

Recycling & Disassembly

Meantime AV29-AV31

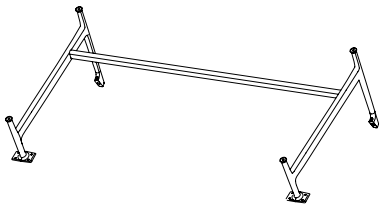

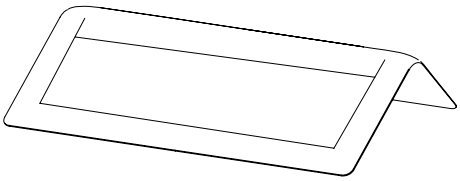

Disassembly

14. Finally, separate the frame into its metal, foam, and wooden components. Dispose the materials in accordance with local recycling or waste disposal guidelines.

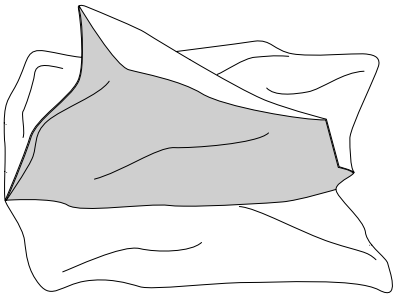

15. Remove the wadding from the textile by carefully cutting it with a knife or pulling it off by hand.