Domes - Sconces

U.S. Patents Pending.

Dome Diameter	Weight	Power	Light Output
8”	2 lbs / 1 kg	12W	Up to 800 lumens
10”	4 lbs / 2 kg	18W	Up to 1200 lumens
12”	5 lbs / 2 kg	30W	Up to 2100 lumens
14”	8 lbs / 4 kg	35W	Up to 2400 lumens
18”	14 lbs / 6 kg	42W	Up to 2900 lumens
22”	20 lbs / 9 kg	49W	Up to 3400 lumens

Finishes — See Porcelain & Metal Finishes.

Sets — Sconces can be arranged in custom sets to your specification.
(Optional) Braided metal electrical cord connects each sconce, requiring just one junction-box per set. Junction box can be at any sconce location.

Light Bulbs — 120V or 230V G8 LED Bulbs by Emery Allen. Bulbs are included.
Color accuracy 90+ CRI.
Choose from 2700K or 3000K light temperature.
Compatible with most standard LED dimmers (ELV forward/reverse phase).
POWER: 120V or 230V. No transformer required.

Light Output — See Dome Light Output guide. Darker porcelain finishes diminish light output. Colored gloss porcelain finishes cast colored light. You may specify a reflector to increase light output and restore color. See Dome Reflector guide.

Production — Handmade in Boulder, Colorado.
10-12 week lead time. Rush by request.

UL Listing — Available by request.

ADVANCED CUSTOMIZATIONS

Backlight Feature — Halo glow effect on wall behind sconce.
Requires “Premium Light” option.

Dim-To-Warm Light — 12V GY6.35 Bulbs by Emery Allen.
Color accuracy 90+ CRI.
1800K-2700K CCT light temperature. See details.
Light output reduced by up to 35%.
POWER: 12V LED transformer required.
Choose from the following:

- Emery Allen Integrated Driver (installed in j-box)
- Remote Driver (installed in attic, basement, or closet)

See Domes LED Drivers & Dimmers for driver details.

Premium Light — 24V LED Strip by ElementalLED or QTL.
Color accuracy 95+ CRI.
Light output is equivalent to Standard Light.
50K+ hour lifetime (17+ years at 8 hr/day).
Choose from light temperatures 2400K to 5000K.
Inquire for premium Dim-To-Warm options (reduced output)
LEDs are electrician replaceable at end of life.
POWER: 24V LED transformer required.
Choose from the following:

- SwitchEX+ Driver/Dimmer Wall Unit
- Remote Driver (installed in attic, basement, closet)

See Domes LED Drivers & Dimmers for driver details

Custom Light — You may optionally specify your own LED strip and driver.

Domes - Sconces - Mounting

U.S. Patents Pending.

No Backlight - Standard

Mounting Standard junction box.
All sconce types and sizes use the mounting plate shown below.

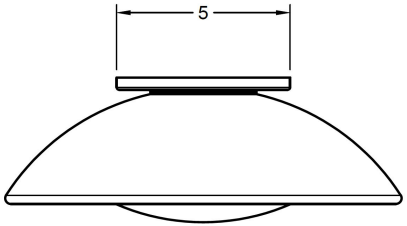

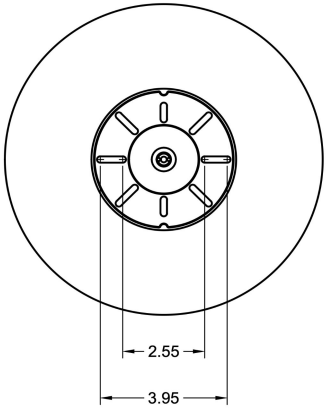

With Backlight - Upgrade

Mounting Standard junction box.

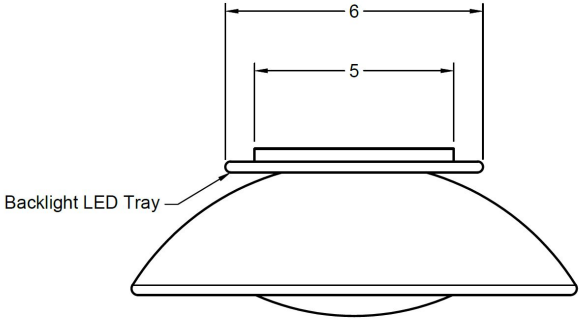

Sconces - 8-Inch

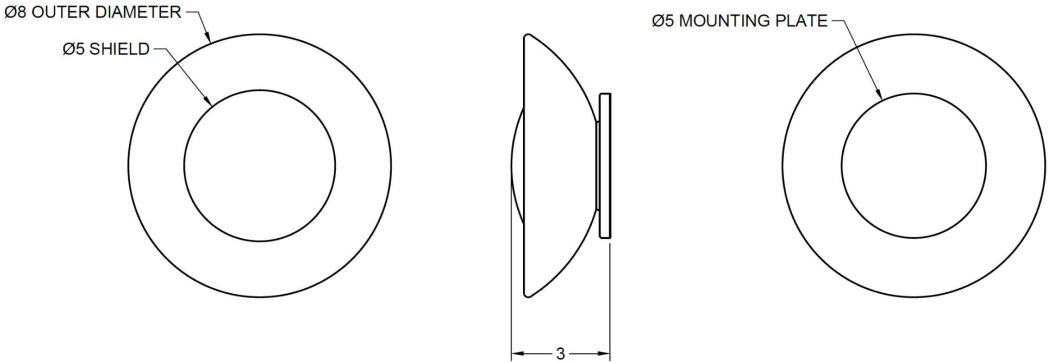

Sconces - 10-Inch

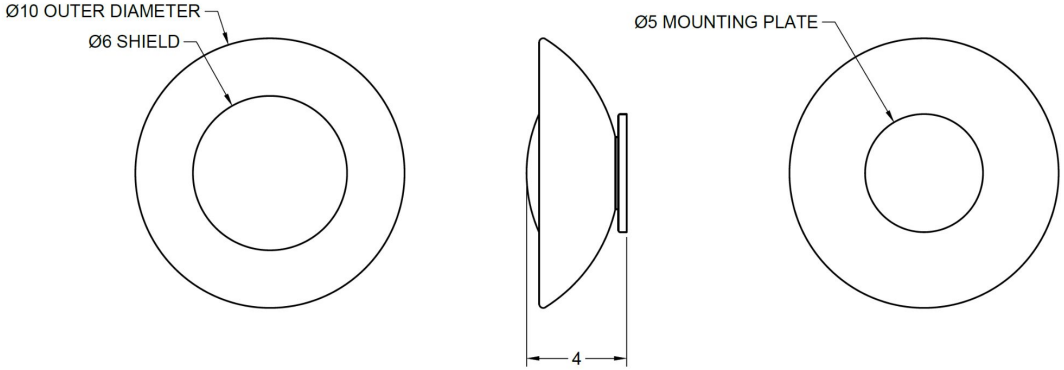

Sconces - 12-Inch

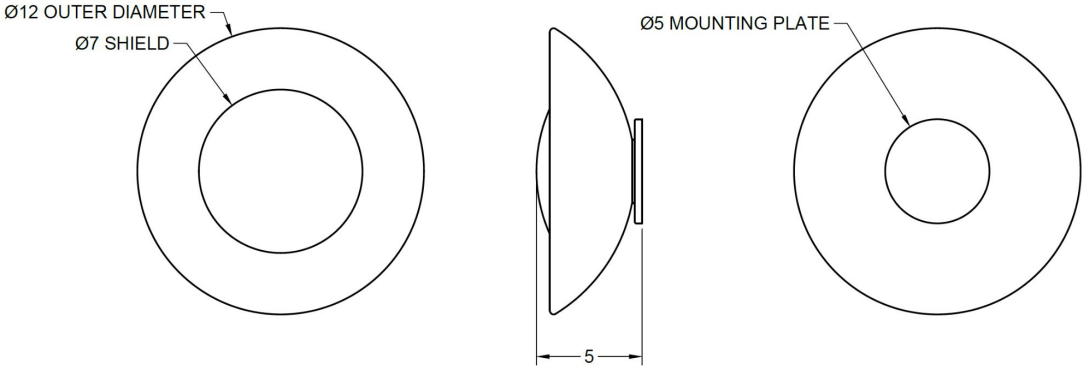

Sconces - 14-Inch

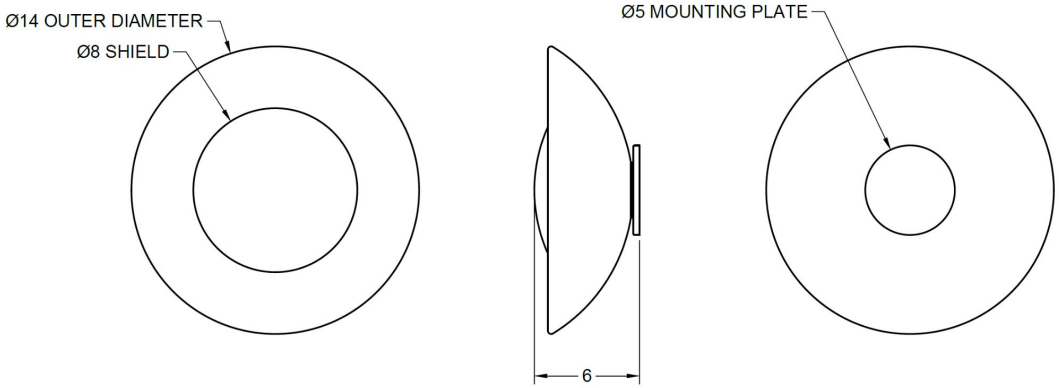

Sconces - 18-Inch

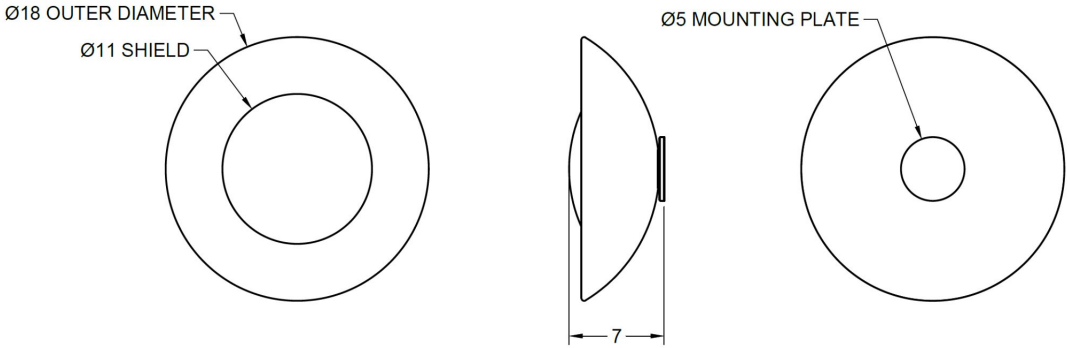
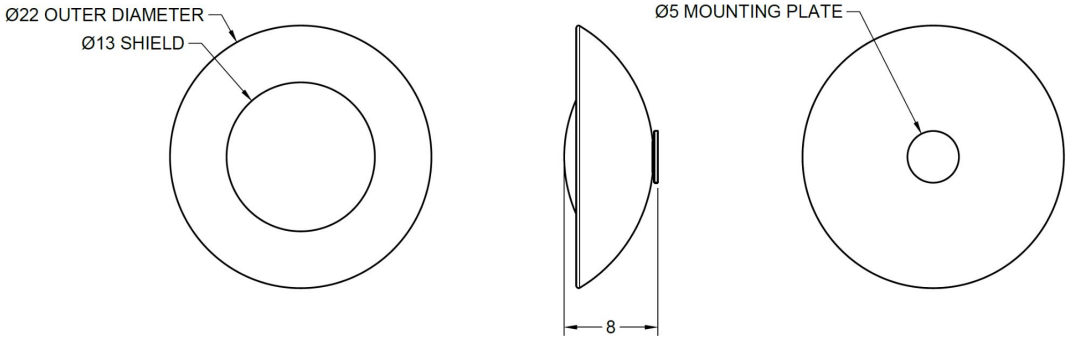
Sconces - 22-Inch