Domes - Constellation

U.S. Patents Pending.

Dome Diameter	Weight	Power	Light Output
8”	2 lbs / 1 kg	12W	Up to 800 lumens
10”	4 lbs / 2 kg	18W	Up to 1200 lumens
12”	5 lbs / 2 kg	30W	Up to 2100 lumens
14”	8 lbs / 4 kg	35W	Up to 2400 lumens
18”	Not available		
22”	Not available		

Dome Constellation sculptures require an integrated, remote, or dimmer style driver.

Finishes — See Porcelain & Metal Finishes.

Mounting — Standard junction box. Sloped ceiling by request.

Light Bulbs — 12V G4 Bulbs by Emery Allen. Bulbs are included.
Color accuracy 90+ CRI.
Choose from light temperatures 2700K or 3000K.
POWER: 12V LED transformer required. Choose from the following:

- Emery Allen Integrated Driver (installed in junction box) (60W or less)
- Emery Allen Integrated Driver (installed in “Dome” style canopy) (61-300W)
- Emery Allen Remote Driver (installed in attic, basement, etc) (300W or less)

See Domes LED Drivers & Dimmers for driver details.

Light Output — See Dome Light Output guide. Darker porcelain finishes diminish light output. Colored gloss porcelain finishes cast colored light. You may specify a reflector to increase light output and restore color. See Dome Reflector guide.

Production — Handmade in Boulder, Colorado.
10-12 week lead time. Rush by request.

UL Listing — Available by request.

ADVANCED CUSTOMIZATIONS

Mounting — Custom canopies including recessed and mud-in are available by request. See Canopy Options.

Dim-To-Warm Light — 12V GY6.35 Bulbs by Emery Allen.
Color accuracy 90+ CRI.
1800K-2700K CCT light temperature. See details.
Light output reduced by up to 35%.
POWER: 12V LED transformer required.
Choose from the following:

- Emery Allen Integrated Driver (installed in j-box)
- Remote Driver (installed in attic, basement, or closet)

See Domes LED Drivers & Dimmers for driver details.

Premium Light — 24V LED Strip by ElementalLED or QTL.
Color accuracy 95+ CRI.
Light output is equivalent to Standard Light.
50K+ hour lifetime (17+ years at 8 hr/day).
Choose from light temperatures 2400K to 5000K.
Inquire for premium Dim-To-Warm options (reduced output)
LEDs are electrician replaceable at end of life.
POWER: 24V LED transformer required.
Choose from the following:

- SwitchEX+ Driver/Dimmer Wall Unit
- Remote Driver (installed in attic, basement, closet)

See Domes LED Drivers & Dimmers for driver details

Custom Light — You may optionally specify your own LED strip and driver.

Round

Constellation 8 - Round - 8x8

51”D

Minimum Overall Drop Height : 18”

You may specify the number of domes, dome sizes, diameter and overall drop height. Each sculpture is designed to specification.

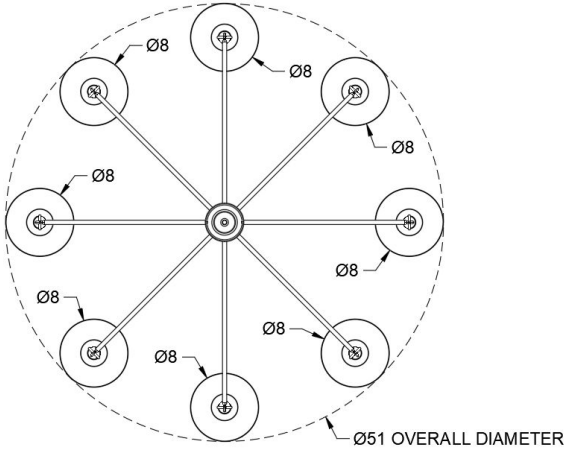

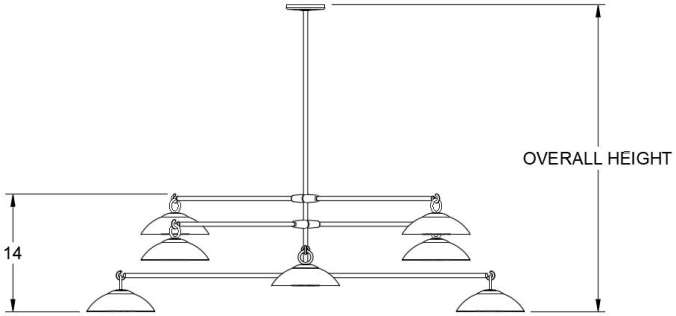

Constellation 8 - Round - 8x10
62”D

Minimum Overall Drop Height : 18”

You may specify the number of domes, dome sizes, diameter and overall drop height. Each sculpture is designed to specification.

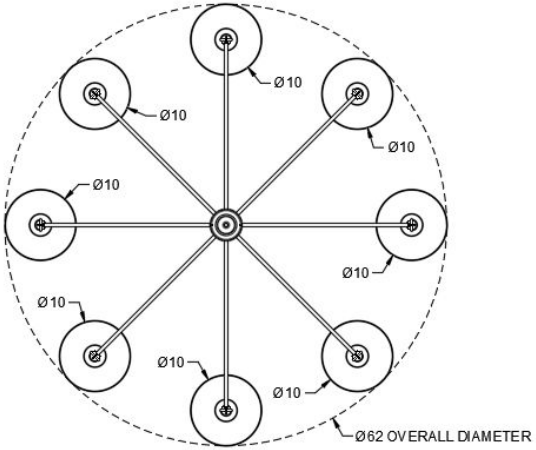

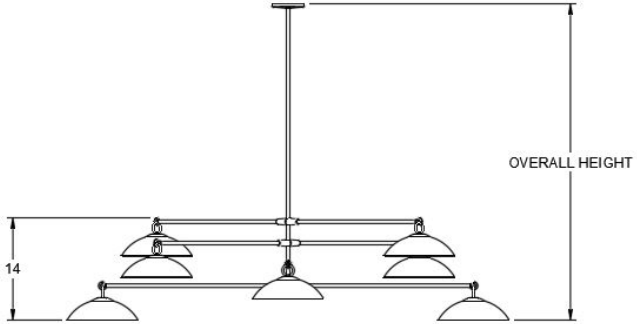

Constellation 8 - Round - 8x12

64”D

Minimum Overall Drop Height : 19”

You may specify the number of domes, dome sizes, diameter and overall drop height. Each sculpture is designed to specification.

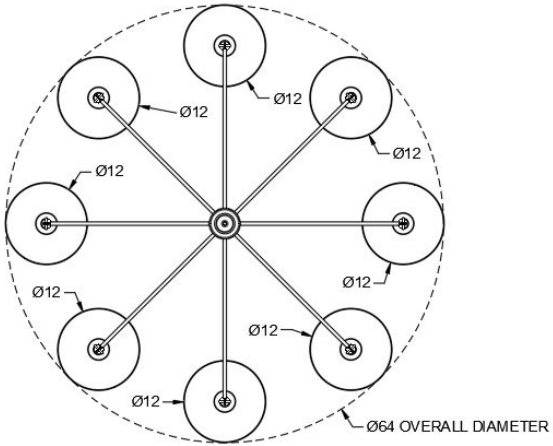

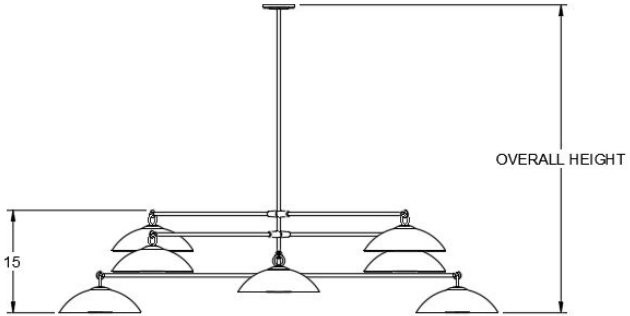

Constellation 8 - Round - 14, 12, 12, 12, 10, 10, 10, 8

44”D

AS SHOWN ON WEBSITE

Minimum Overall Drop Height : 33”

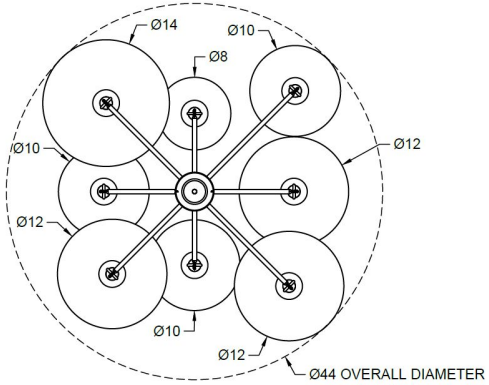

You may specify the number of domes, dome sizes, diameter and overall drop height. Each sculpture is designed to specification.

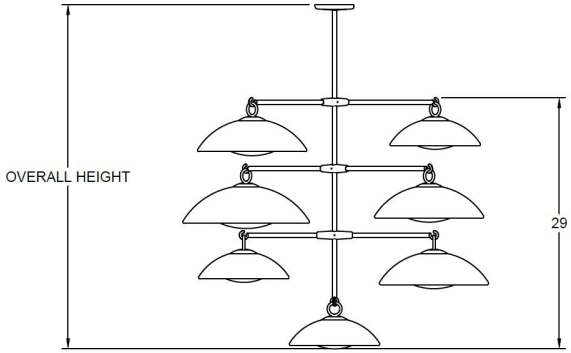

Constellation 8 - Round - 14, 12, 12, 12, 12, 10, 10, 8

54”D

Minimum Overall Drop Height : 18”

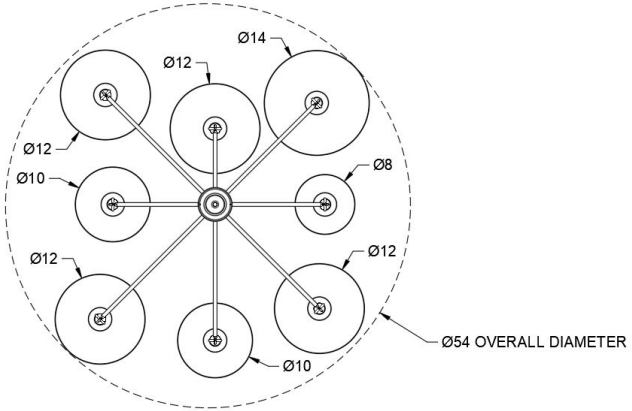

You may specify the number of domes, dome sizes, diameter and overall drop height. Each sculpture is designed to specification.

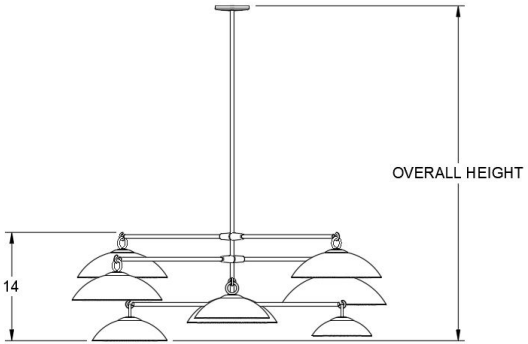

Constellation 8 - Round - 14, 12, 12, 12, 12, 10, 10, 8

64”D

Minimum Overall Drop Height : 18”

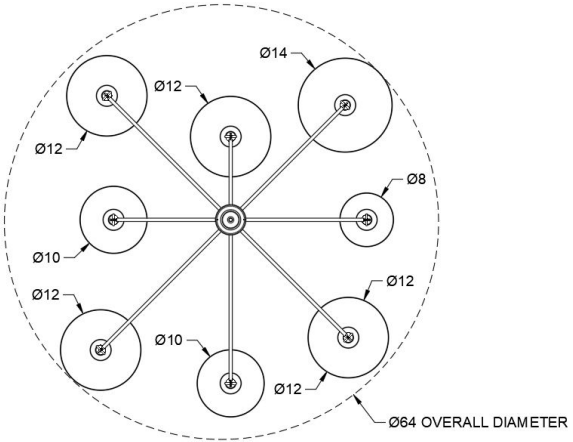
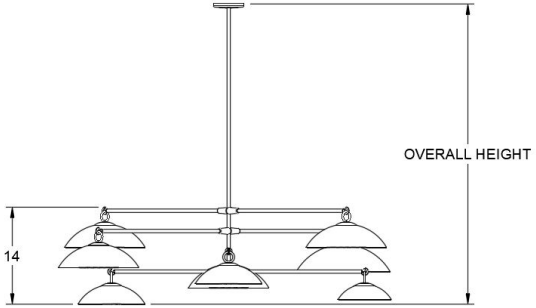
You may specify the number of domes, dome sizes, diameter and overall drop height. Each sculpture is designed to specification.