Domes - Uplight Pendants

U.S. Patents Pending.

Dome Diameter	Weight	Power	Light Output
8” / 8”	8 lbs / 4 kg	24W	Up to 1600 lumens
10” / 8”	9 lbs / 4 kg	30W	Up to 2000 lumens
10” / 10”	11 lbs / 5 kg	36W	Up to 2400 lumens
12” / 8”	11 lbs / 5 kg	42W	Up to 2900 lumens
12” / 10”	12 lbs / 5 kg	48W	Up to 3300 lumens
12” / 12”	14 lbs / 6 kg	60W	Up to 4200 lumens
14” / 10”	16 lbs / 7 kg	53W	Up to 3600 lumens
14” / 12”	16 lbs / 7 kg	65W	Up to 4500 lumens
18” / 12”	23 lbs / 10 kg	72W	Up to 5000 lumens
22” / 14”	32 lbs / 15 kg	84W	Up to 5800 lumens

Finishes — See Porcelain & Metal Finishes.

Mounting — Standard junction box. Sloped ceiling by request.

Light Bulbs — 120V or 230V G8 LED Bulbs by Emery Allen. Bulbs are included.
Color accuracy 90+ CRI.
Choose from 2700K or 3000K light temperature.
Compatible with most standard LED dimmers (ELV forward/reverse phase).
POWER: 120V or 230V. No transformer required.

Light Output — See Dome Light Output guide. Darker porcelain finishes diminish light output. Colored gloss porcelain finishes cast colored light. You may specify a reflector to increase light output and restore color. See Dome Reflector guide.

Production — Handmade in Boulder, Colorado. 10-12 week lead time. Rush by request.

UL Listing — Available by request.

ADVANCED CUSTOMIZATIONS

Mounting — Custom canopies including recessed and mud-in are available by request. See Canopy Options.

Dim-To-Warm Light — 12V GY6.35 Bulbs by Emery Allen.
Color accuracy 90+ CRI.
1800K-2700K CCT light temperature. See details.
Light output reduced by up to 35%.
POWER: 12V LED transformer required.
Choose from the following:

- Emery Allen Integrated Driver (installed in j-box)
- Remote Driver (installed in attic, basement, or closet)

See Domes LED Drivers & Dimmers for driver details.

Premium Light — 24V LED Strip by ElementalLED or QTL.
Color accuracy 95+ CRI.
Light output is equivalent to Standard Light.
50K+ hour lifetime (17+ years at 8 hr/day).
Choose from light temperatures 2400K to 5000K.
Inquire for premium Dim-To-Warm options (reduced output)
LEDs are electrician replaceable at end of life.
POWER: 24V LED transformer required.
Choose from the following:

- SwitchEX+ Driver/Dimmer Wall Unit
- Remote Driver (installed in attic, basement, closet)

See Domes LED Drivers & Dimmers for driver details

Custom Light — You may optionally specify your own LED strip and driver.

Uplight Pendants - 8, 8

AS SHOWN ON WEBSITE

Minimum Overall Drop Height : 10”

You may specify overall drop height. Each sculpture is designed to specification.

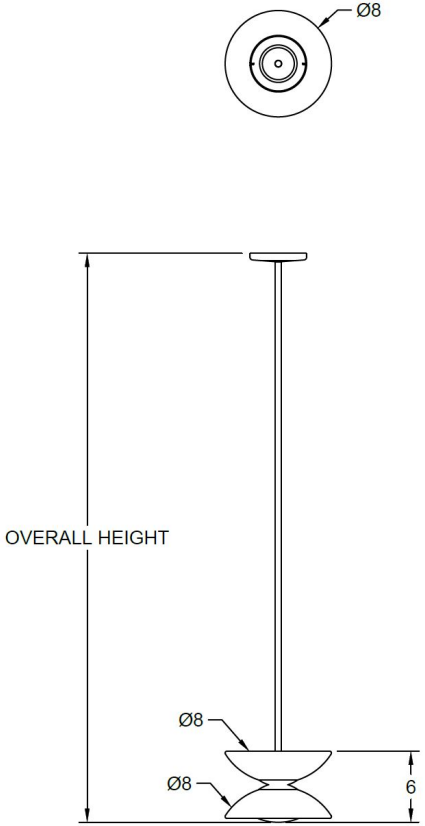

Uplight Pendants - 10, 8

Minimum Overall Drop Height : 10”

You may specify overall drop height. Each sculpture is designed to specification.

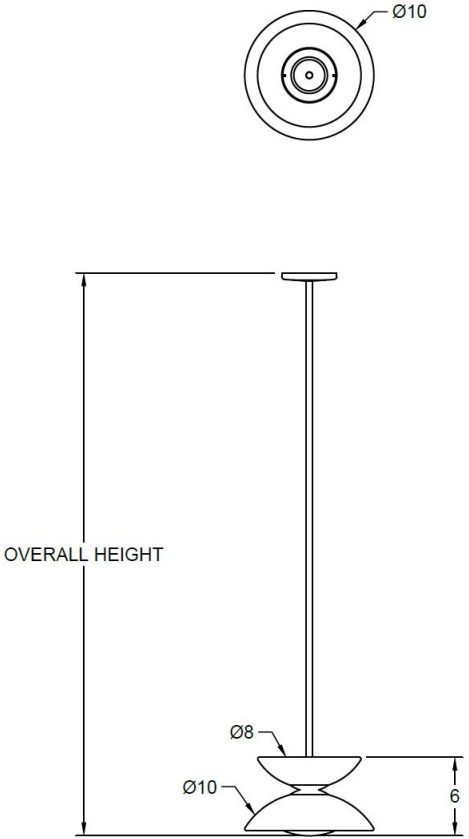

Uplight Pendants - 10, 10

Minimum Overall Drop Height : 11”

You may specify overall drop height. Each sculpture is designed to specification.

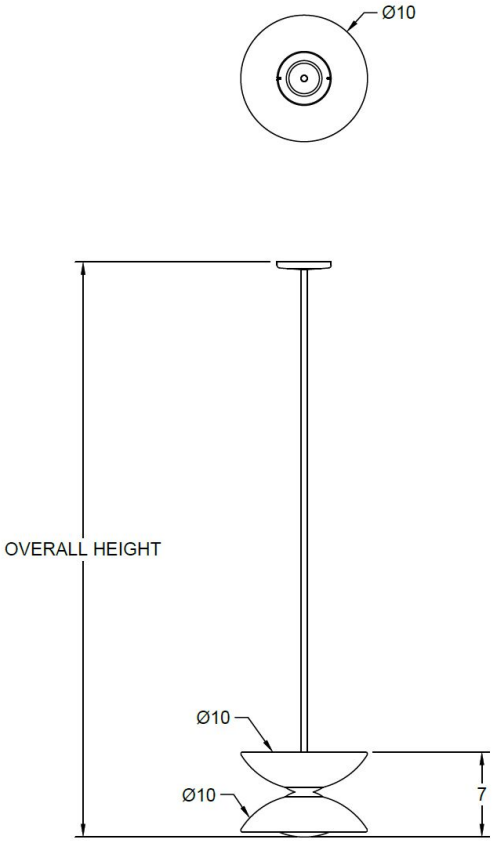

Uplight Pendants - 12, 8

AS SHOWN ON WEBSITE

Minimum Overall Drop Height : 11”

You may specify overall drop height. Each sculpture is designed to specification.

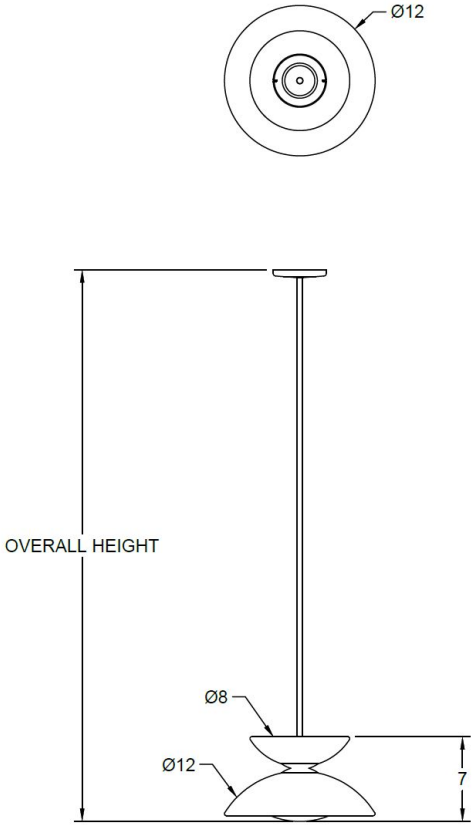

Uplight Pendants - 12, 10

Minimum Overall Drop Height : 12”

You may specify overall drop height. Each sculpture is designed to specification.

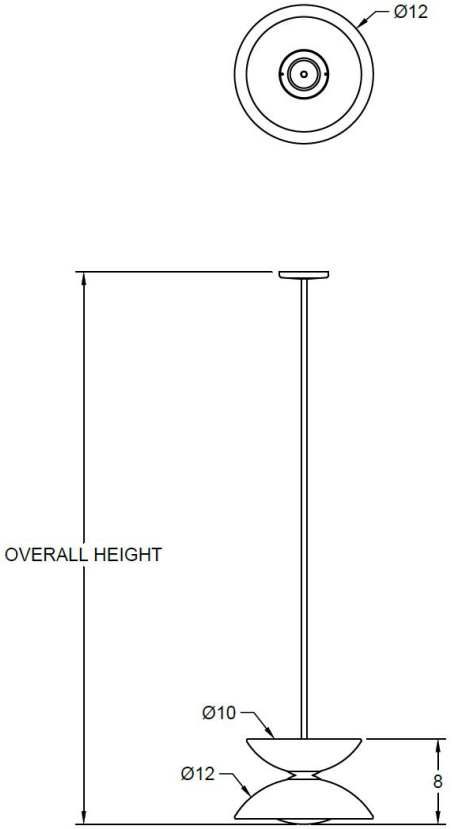

Uplight Pendants - 12, 12

Minimum Overall Drop Height : 13”

You may specify overall drop height. Each sculpture is designed to specification.

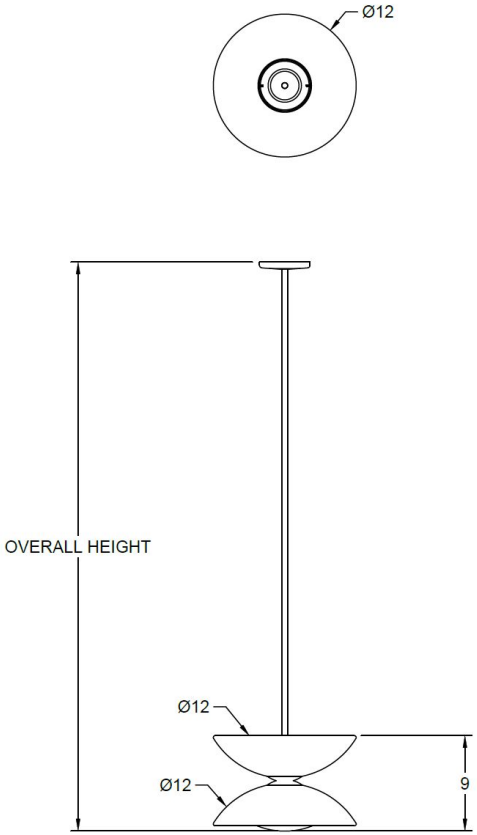

Uplight Pendants - 14, 10

AS SHOWN ON WEBSITE

Minimum Overall Drop Height : 13”

You may specify overall drop height. Each sculpture is designed to specification.

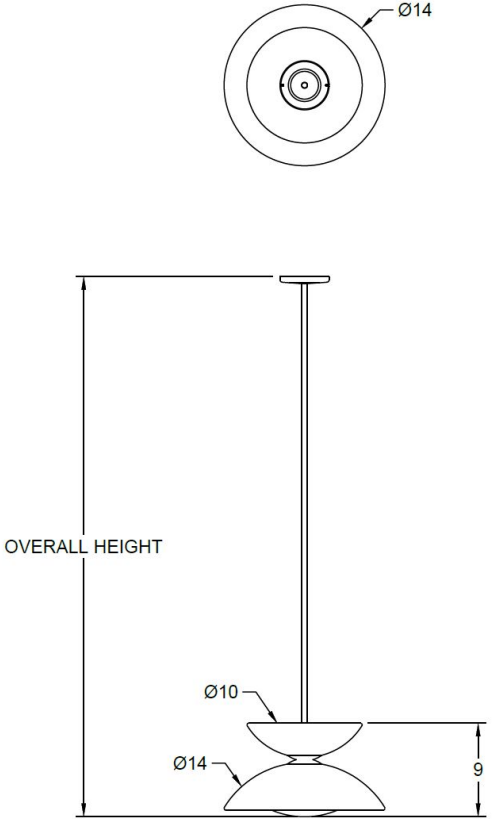

Uplight Pendants - 14, 12

Minimum Overall Drop Height : 13”

You may specify overall drop height. Each sculpture is designed to specification.

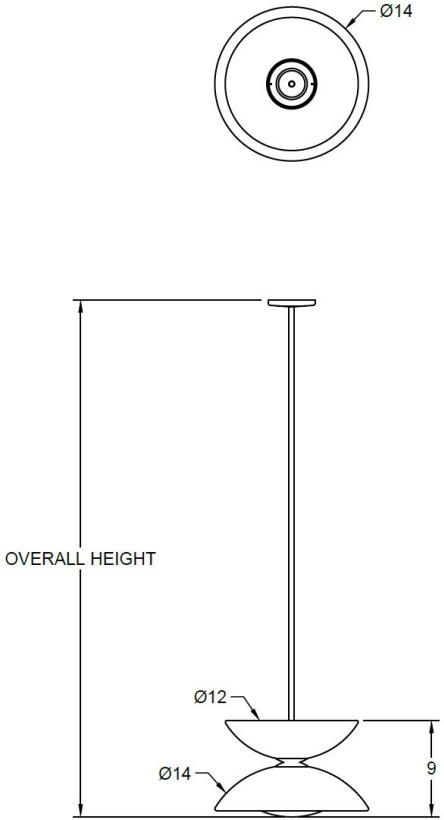

Uplight Pendants - 18, 12

AS SHOWN ON WEBSITE

Minimum Overall Drop Height : 15”

You may specify overall drop height. Each sculpture is designed to specification.

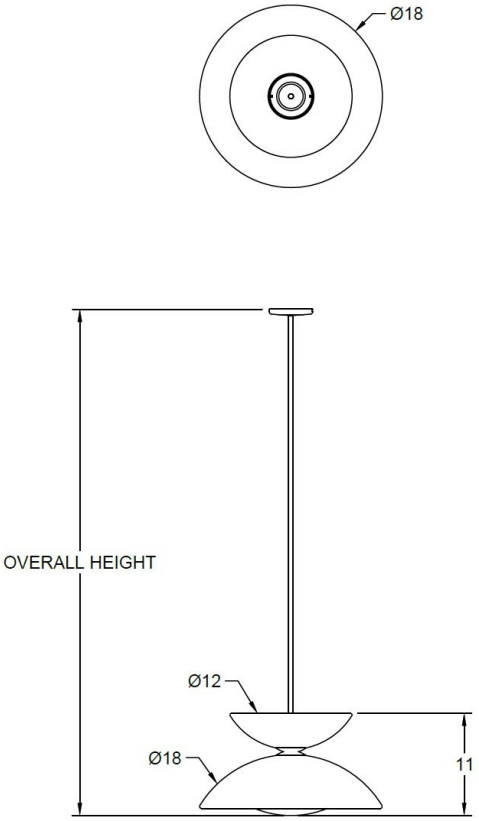

Uplight Pendants - 22, 14

Minimum Overall Drop Height : 17”
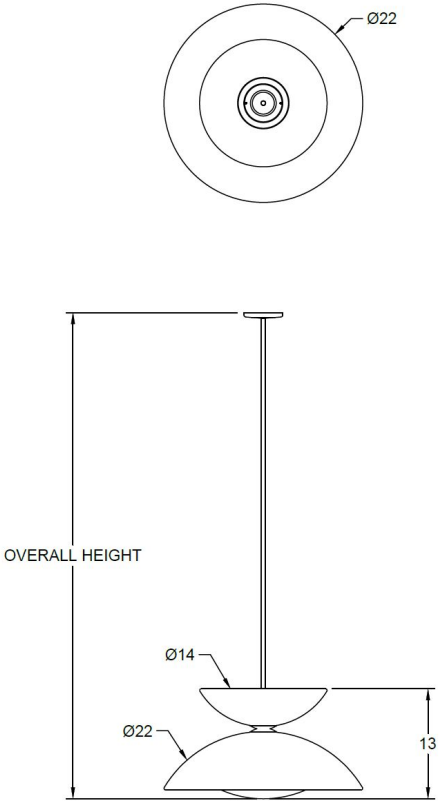
You may specify overall drop height. Each sculpture is designed to specification.