REV.	ZONE	DESCRIPTIONS	DWN BY	DATE

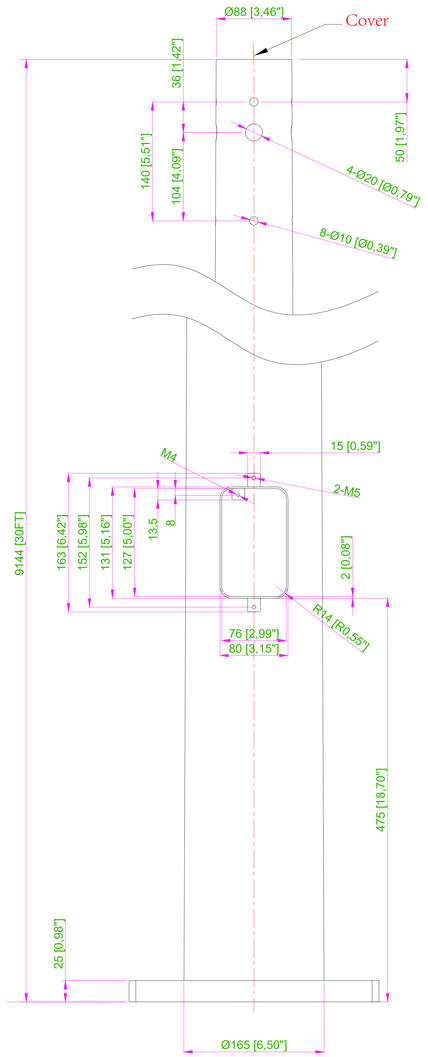

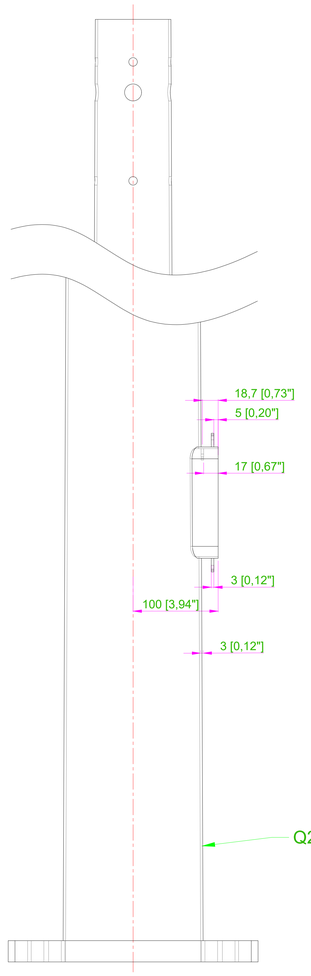

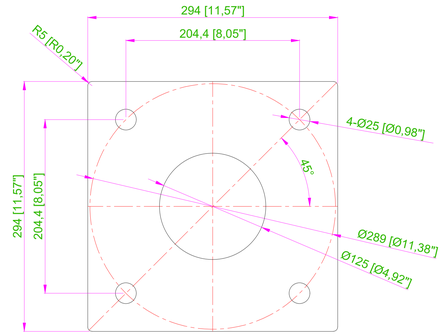

ANCHOR BOLT TEMPLATE

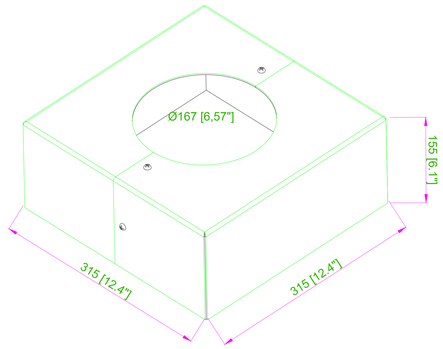

BASE COVER

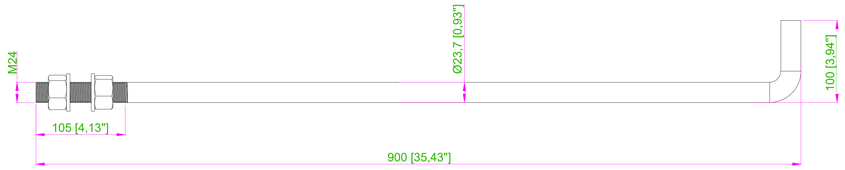

ANCHOR BOLT
4PCS PER POLE

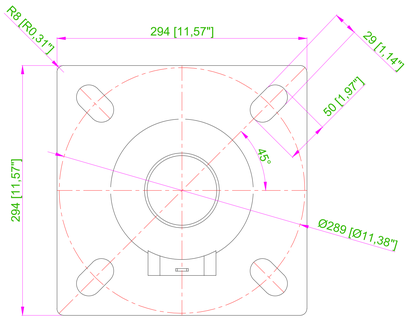

DO NOT SCALE DRAWING

PROJECTION

ShenZhen Lighting

TOLERANCE ALL DIM. ARE IN:mm						
(±)	0 <~< 3	3 <~< 6	6 <~< 30	30 <~< 120	120 <~< 315	315 < 1000
A ✓	0.05	0.1	0.15	0.2	0.3	0.4
B	0.1	0.15	0.2	0.3	0.5	0.8
C	0.2	0.3	0.4	0.5	0.7	1.0
D	0.4	0.5	0.7	1.0	1.5	2.0

MODEL: SZ-5T30FT			DATE: 2025-04-12	
PART NAME:			S-PATH:	
CAD FILE:			PART NO:	
P-E FILE:			DWG. NO:	
MATERIAL:Q235B			FINISH:	
DWN.	CHKD.	APP.	REVISION:	PAGE 1 OF 1
			REMARK:	