REV.	ZONE	DESCRIPTIONS	DWN BY	DATE

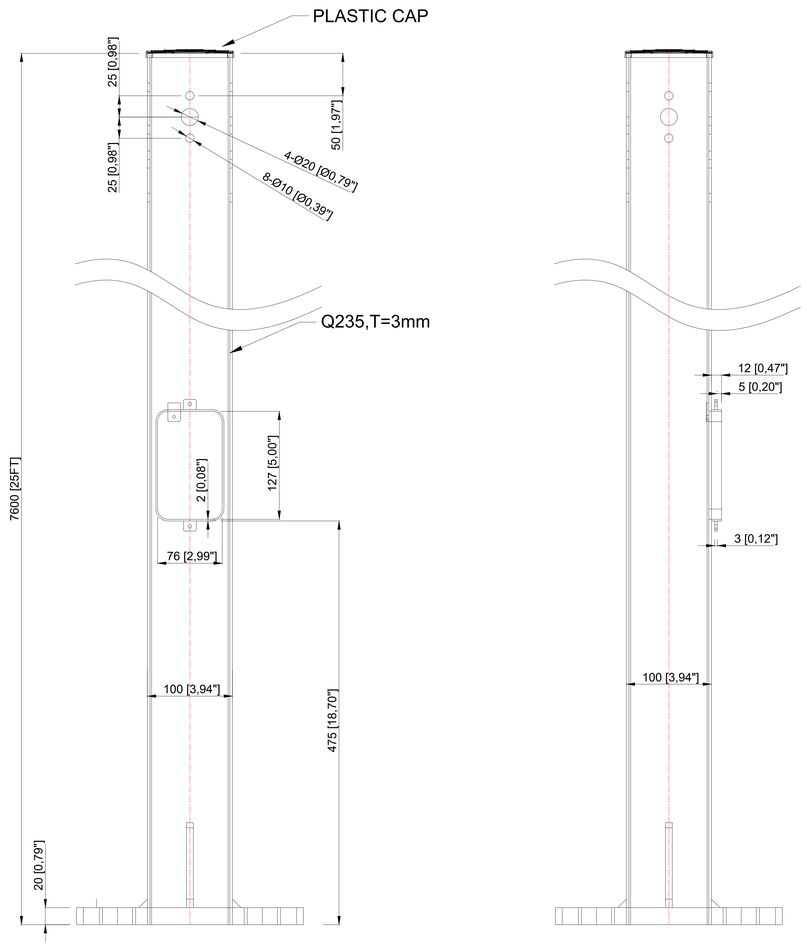

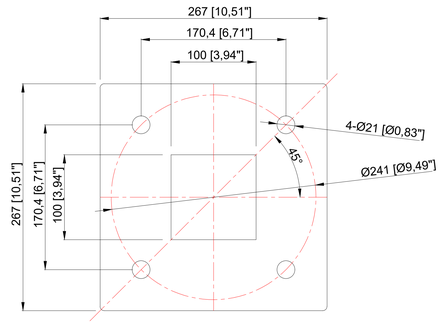

ANCHOR BOLT TEMPLATE

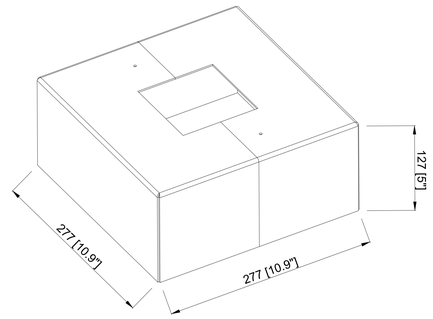

BASE COVER

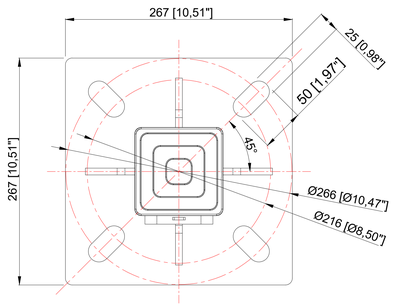

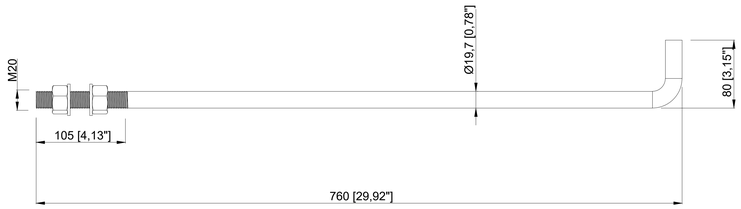

ANCHOR BOLT
4PCS PER POLE

All net weight:84Kg

DO NOT SCALE DRAWING	PROJECTION	ShenZhen Lighting		
TOLERANCE ALL DIM. ARE IN:mm	MODEL: SZ-4S25FT		DATE: 2024-9-12	
	PART NAME:		S-PATH:	
	CAD FILE:		PART NO:	
	P-E FILE:		DWG. NO:	
	MATERIAL:Q235B		FINISH:	
DWN.	CHKD.	APP.	REVISION:	PAGE 1 OF 1
			REMARK:	

(.)	0 <~< 3	3 <~< 6	6 <~< 30	30 <~< 120	120 <~< 315	315 < 1000
A ✓	0.05	0.1	0.15	0.2	0.3	0.4
B	0.1	0.15	0.2	0.3	0.5	0.8
C	0.2	0.3	0.4	0.5	0.7	1.0
D	0.4	0.5	0.7	1.0	1.5	2.0