REV.	ZONE	DESCRIPTIONS	DWN BY	DATE

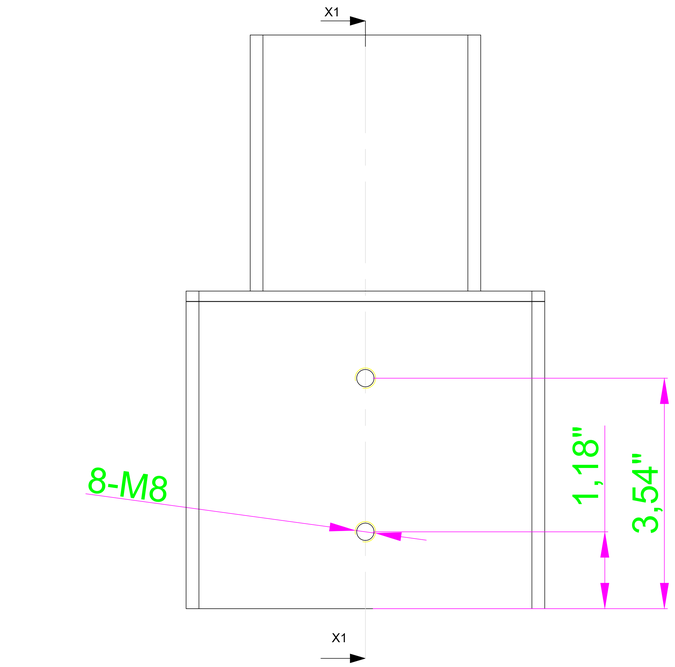

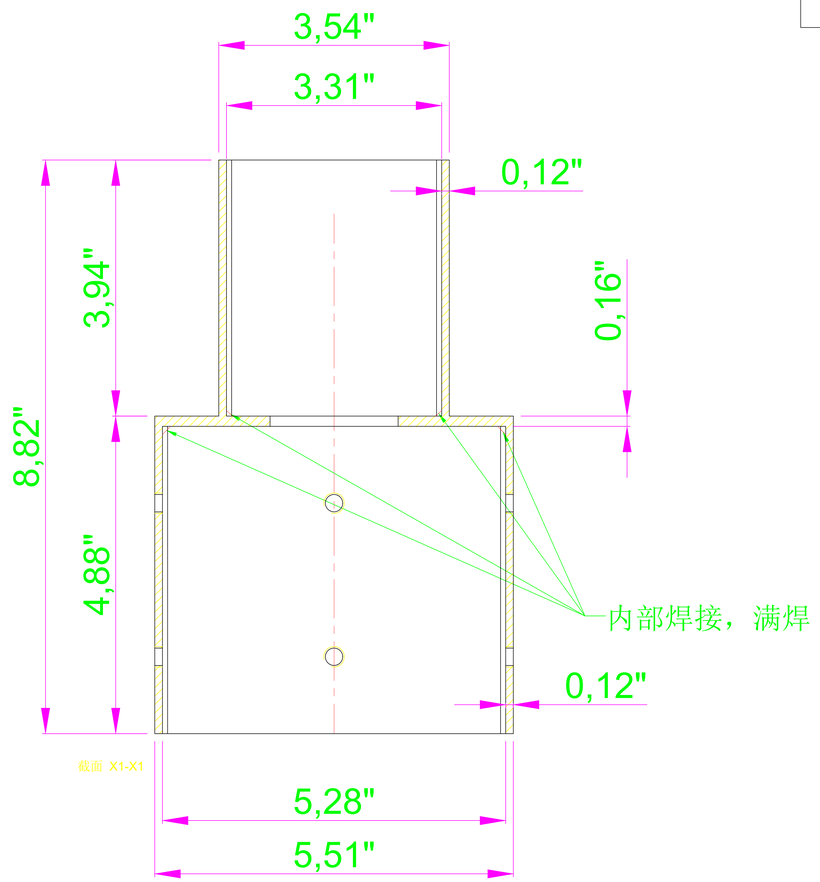

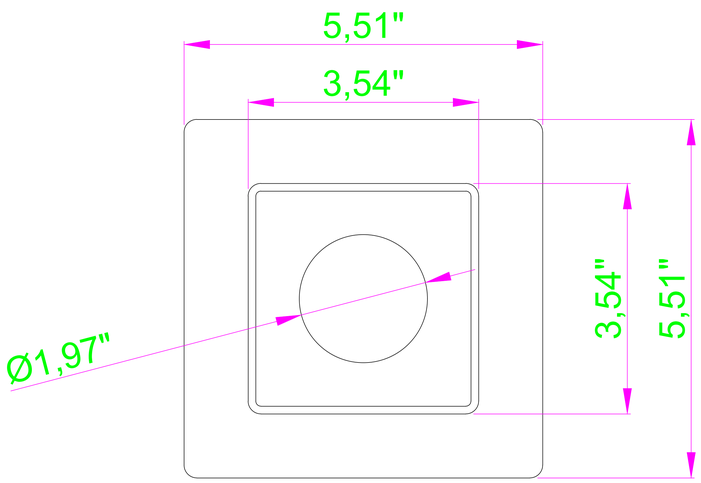

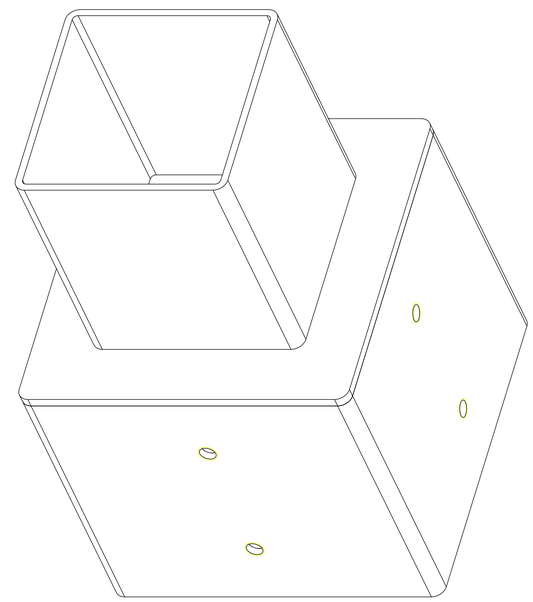

Net weight:2.3Kg

DO NOT SCALE DRAWING							PROJECTION	ShenZhen Lighting			
TOLERANCE ALL DIM. ARE IN:mm							MODEL: SZ-5S-4S1			DATE:	
(±)	0 <~≤ 3	3 <~≤ 6	6 <~≤ 30	30 <~≤ 120	120 <~≤ 315	315 < 1000	PART NAME: Bracket			S-PATH:	
							CAD FILE:			PART NO:	
A	0.05	0.1	0.15	0.2	0.3	0.4	P-E FILE:			DWG. NO:	
B	0.1	0.15	0.2	0.3	0.5	0.8	MATERIAL: Iron			FINISH:	
C✓	0.2	0.3	0.4	0.5	0.7	1.0	DWN.	CHKD.	APP.	REVISION:	PAGE OF
D	0.4	0.5	0.7	1.0	1.5	2.0				REMARK:	