TECHNICAL DATA SHEET



LED Security Light

SZ-SS40W3A6-5000K

Advantage:

- With Infrared sensor ,Dusk to down. IR sensor sensing distance can be reached 70FT, and sensing angle is 150° degree.
- Adopt high purity ADC12 material for the radiator, the fin structure help to speed up heat dissipation. Lower light decay, longer lifespan.
- Integrated shading cover structure to reduce light loss.
- Adopt anti-high temperature and anti-fire PC cover, to avoid the light loss caused by yellowing.
- IP65 Waterproof,Customized durable and weatherproof design protects lamp from rain, sleet or snow.
- Warranty:5years

Application:

Perfect lighting solution for garages, workshops, industrial workstations, storage rooms, equipment rooms, etc.





TECHNICAL DATA SHEET

Basic parameter

Part No.	Power	LED Type	Lumen	CCT	Module	IP Rank	Sensor mode	Material	Input Voltage
SZ-SS40W3A6-5000K	40W	SMD 2835	4000lm	5000K	Three heads	IP65	Infrared sensor	ADC12+ABS+PC Finish:White	120VAC 60Hz

Sensor parameter

Input Voltage	Rated load	Detection Distance	Time Setting	Install height	Working Temperature	Installation method
AC110-130V	MAX.500W resistive load MAX.200W Inductive load	Max 70FT (adjustable)	5sec,1min. 5min.10min	Max 12FT	(-10℃-+40℃)	Switch should be facing down

Mode Setting Up（Note: It will enter the warm-up time for 15S when the lamp is turned on, then start mode setting.）

1>TEST MODE（Light on for 5S for both day and night when sensing a moving object）

Setting Method：Set “TIME ” to “TEST”, and set “DISTANCE” to any one of “L/M/H”.

Adjust the “distance” switch can set the sensitivity of the sensor, means changing the sensor’s detection distance, it can be positioned to high, mid and low.

2>MOTION MODE（When the object moves within the range of induction and the brightness of outside is less then 10Lux, the light will be turned off automatically after light on for 1min/3min/10min. After 3S, its will enter the motion mode again when sensing a moving object. Light off automatically when the brightness of outside is higher 40Lux.）

Setting Method：

a. Detection Distance: Set “DISTANCE” to any one of “ L/M/H” according to your application;

b. Lighting up time：Set “TIME” to any one of “ 1min/3min/10min” according to your application.

3> DUSK TO DAWN (Light on automatically when the brightness less than 10Lux outside; Light off automatically when the brightness high than 40Lux outside.)

Setting Method：Set “DISTANCE”to“D2D”，and set“TIME”to any one of “1min/3min/10min”

4>MANUAL MODE (Light on for both day and night)

Setting Method：Set “DISTANCE” to “D2D”, set “TIME” to “TEST”.

Packaging

Part No.	Carton size	Qty/Ctn (PCS)	Unit N.W. (LB)	G.W. (LB)
SZ-SS40W3A6-5000K	22.44*15.35*14.96″	8	22.44	24.64

ShenZhen Lighting®

USE AND CARE GUIDE
MOTION SECURITY LIGHT

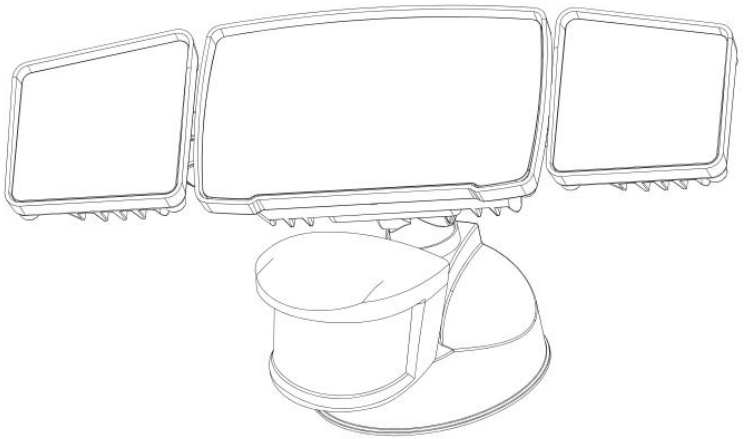

PLEASE FOLLOW ALL IMPORTANT SAFEGUARDS,

WARNINGS AND OPERATING INSTRUCTIONS BEFORE USE

1. Specification

Model No.	SZ-SS40W3A6-5000K
Rated Voltage	120V 60Hz
Rated Wattage	40 Watts
Max Detection Distance	70FT
Max Detection Degree	150°(plane detection degree)
Rated Luminous Flux	4000 lm

2. Safety Information

2.1 This product must be installed and operated by professional electricians according to the installation instructions.

2.2 This fixture is designed for using 120VAC, 60Hz . Do not use DC power.

2.3 Before installing the light fixture, ensure that all parts are present and same as the part list. If any part is missing or damaged, do not attempt to assemble, install, or operate this light fixture.

2.4 Turn off the power and make sure the power is off before installing the light fixture.

2.5 This light fixture is a non-dimmable product, do not connect to a dimmer or timer.

2.6 When using the light fixture, do not cover by any combustible materials to avoid fire.

2.7 Burn warned. Don't touch the light fixture before cooling.

2.8 This device complies with the FCC Rules.

2.9 Install the height of the light fixture not lower than 6.6FT, to avoid disturbance from small animals on the ground within detection range.

2.10 Try to install this light fixture in the place without metal halide lamp, if can't avoid, install the light fixture 10FT away from the irradiation scope of metal halide lamp.

2.11 The light fixture should be installed away from the place like air conditioning, refrigerators, furnace, which provided sensitive to air temperature change, as well as windows and other strong hot air flow places, so as not to cause wrong action.

2.12 When the air temperature is close to a person's body temperature, the detection sensitivity will reduce.

3. Installation

3.1 Mounting location: wall or eave mounted.

3.2 Mounting Height: The light fixture should be mounted approximately 8FT (7.2-8.2FT) above the ground. If the light fixture is mounted higher or lower than recommended, the coverage area, distance or sensitivity of the sensor will be changed accordingly.



Wall Mounted



Eave Mounted

4. Installation of things

4.1 Tools needed for installation


Phillips screwdriver


Flathead screwdriver


Safety goggles


Circuit tester


Wire strippers/cutters


Insulated gloves


Ladder

4.2 Accessories

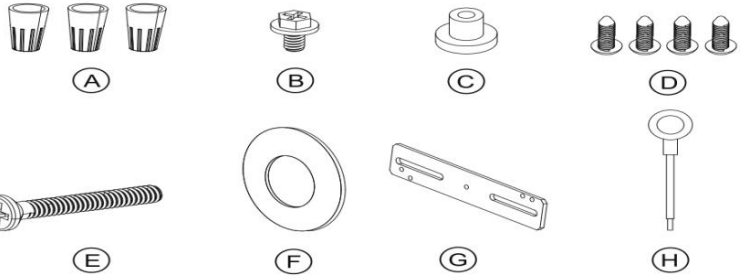

C/N	Part	Quantity	Description	Specification	Function
1	Ⓐ	3	Spiral connector	φ0.47*0.85in (P3 φ12*21.5 mm)	Connect wall wires, ground wire and fixture wires accordingly
2	Ⓑ	1	Green Screw	8#—32 L=0.24in (φ4.1*6 mm)	Locked ground wire
3	Ⓒ	1	Rubber Plug	φ0.6*0.47in (φ16*12 mm)	Plug screw holes
4	Ⓓ	4	Screws	8#—32 L=0.79in (φ4.1*20 mm)	Fix mounting bracket
5	Ⓔ	1	Telescopic screw	10#—24 L=1.96in (φ4.8*50mm)	Fix the light fixture onto the mounting bracket
6	Ⓕ	1	EVA Pad	5*0.08 in (φ128*2 mm)	Prevent water entering the light fixture
7	Ⓖ	1	Mounting Bracket	3.9*0.75*0.08 in (99*19*2 mm)	Connect junction box and light fixture
8	Ⓗ	1	Ground wire	18AWG Bare copper wire	Connect ground wire

4.3 Installation steps

4.3.1 Installation accessories display.

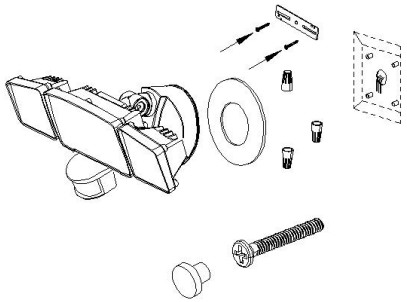

4.3.2 Mount the brackets to the wall connection box.

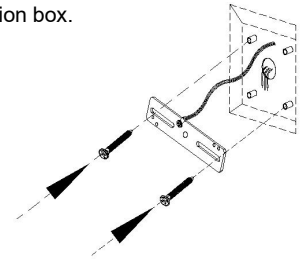

4.3.3 Insert the wire through EVA pad, and use spiral connector to connect the junction box wire.

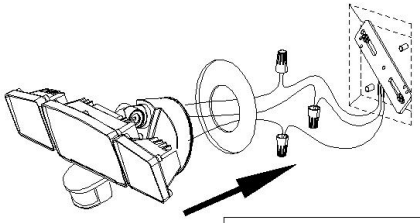

The sensors is installed below

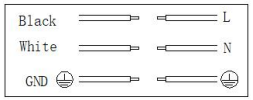

Note: Wiring Connection:

1. L connected Black line ; 2. N connected White line ; 3. Ground wire connected green line.

Note: Improper wiring or poor grounding may cause the light to be slightly bright.

4.3.4 Align the lamp body with the hole on the bracket of the junction box, then use screw to fix in the middle of the bottom box.

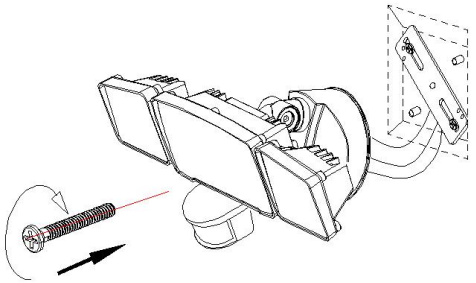

4.3.5 Plug the hole with a rubber plug, waterproof and dustproof.

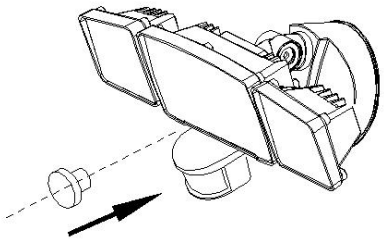

4.3.6 Adjust the lamp holder and the sensor to the right positions. Please note the sensor should be face down.

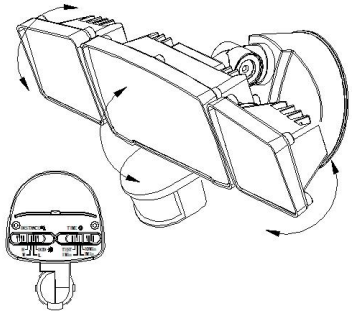

5. Direction Adjustment

5.1 Setting for the light coverage area

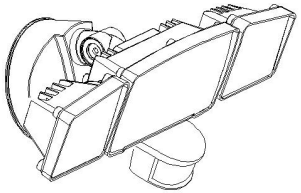

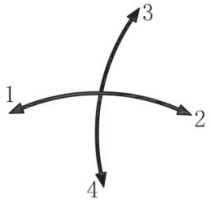

5.1.1 Tilt the light head left or right to adjust the light coverage area, see the arrow indication direction 1 and 2 to adjust the light head.

5.1.2 Tilt the light head up or down to adjust the light coverage area, see the arrow indication direction 3 and 4 to adjust the light head.

6. SENSOR INSTRUCTIONS

6.1 Specification

Power Source	AC120V	Rated load	MAX.200W LED
Power Frequency	60 Hz	Detection Distance	1>RANGE MIN: Within 13FT
Installation Height	3.3FT-13FT		2>RANGE MAX: Within 70FT
Detection Range	150°	Time Setting	1>Test mode: 5 sec
Detection Motion Speed	0.6-1.5 m/s		2>Motion mode: On-time(1 min-3 min-10 min)
Working Temperature Power	-14℉~104℉	Working Humidity:	<93%RH

6.2 Mode Setting Up（Note: It will enter the warm-up time for 15S when the lamp is turned on, then start mode setting.）

1>TEST MODE（Light on for 5S for both day and night when sensing a moving object）

Setting Method：Set “TIME ” to “TEST”, and set “DISTANCE” to any one of “L/M/H”.

Adjust the “distance” switch can set the sensitivity of the sensor, means changing the sensor’s detection distance, it can be positioned to high, mid and low.

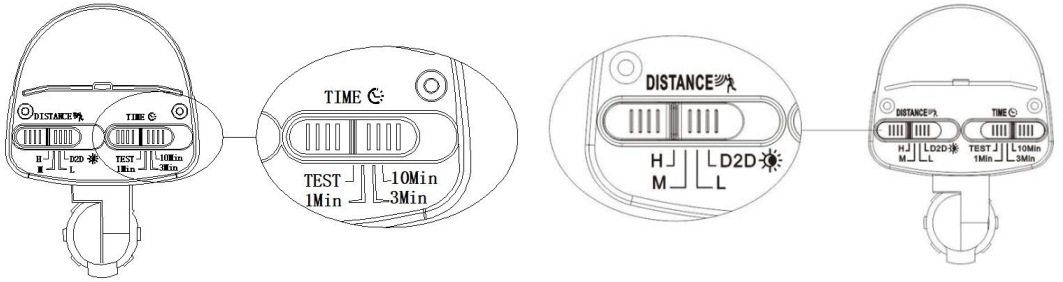

2>MOTION MODE（When the object moves within the range of induction and the brightness of outside is less then 10Lux, the light will be turned off automatically after light on for 1min/3min/10min. After 3S, its will enter the motion mode again when sensing a moving object. Light off automatically when the brightness of outside is higher 40Lux.）

Setting Method：

a. Detection Distance: Set “DISTANCE” to any one of “ L/M/H” according to your application;

b. Lighting up time：Set “TIME” to any one of “ 1min/3min/10min” according to your application.

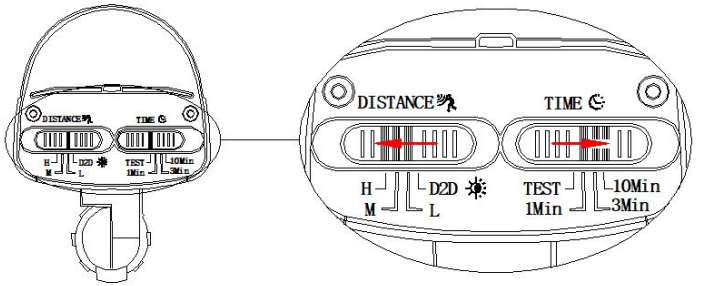

3> DUSK TO DAWN (Light on automatically when the brightness less than 10Lux outside; Light off automatically when the brightness high than 40Lux outside.)

Setting Method：Set “DISTANCE”to“D2D”，and set“TIME”to any one of “1min/3min/10min”

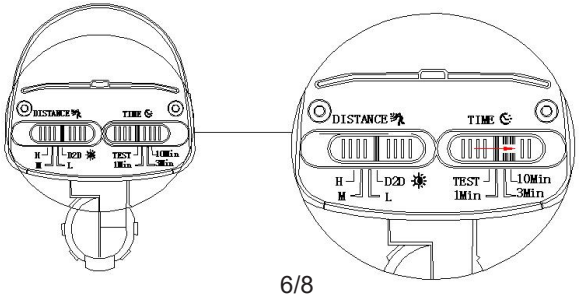

4>MANUAL MODE (Light on for both day and night)

Setting Method：Set “DISTANCE” to “D2D”, set “TIME” to “TEST”.

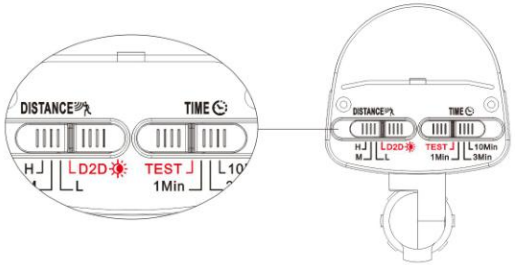

7. Setting the motion sensor detection range

7.1 Adjustment for the detection range

7.1.1 The sensor can be adjusted clockwise or counterclockwise per requirement, the max can be reached 45°, for the purpose of changing the detection range.

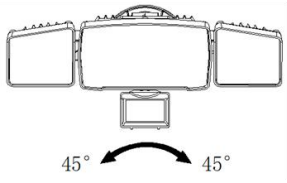

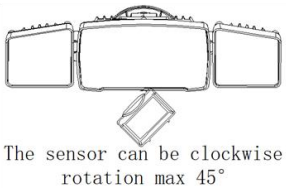

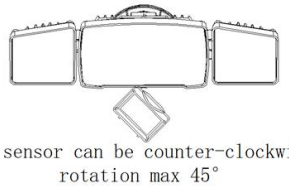

7.2 When mounting at 45° depression angle will shorten the detection distance, see below picture.

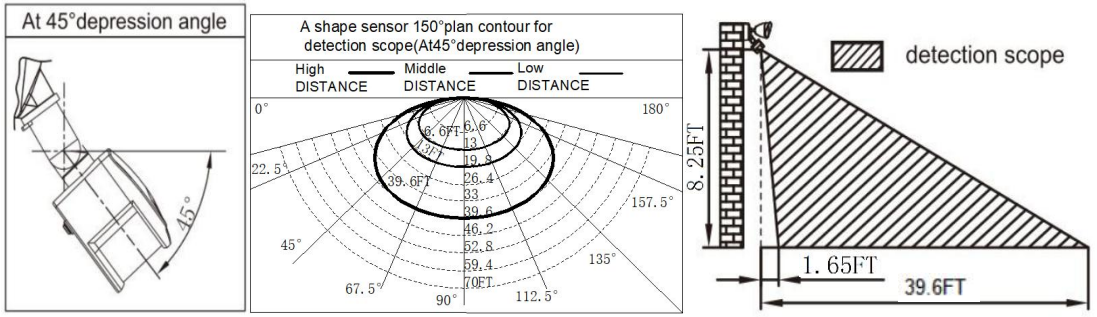

7.3 When mounting at 5° depression angle will shorten the detection distance, see below picture.

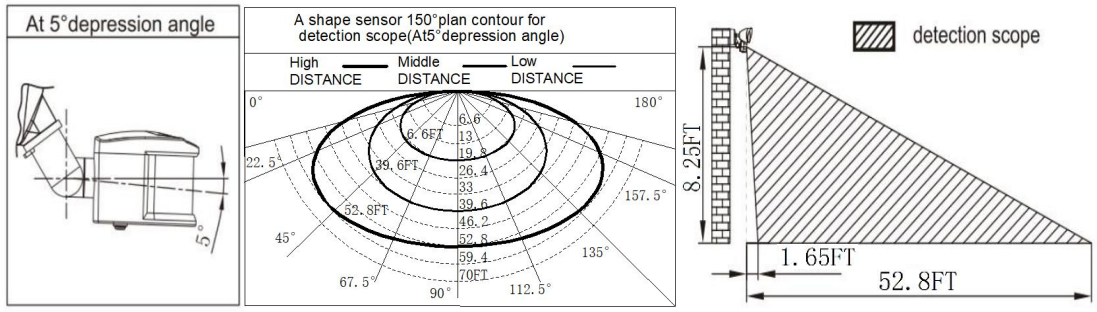

7.4 Adjustment and setting for the detection distance.

7.4.1 As shown in the picture 1(schematic diagram of the max detection range).The sensor can be adjusted up 90°or down 100°. When fixture installed on the vertical wall, adjust the sensor to different degree can change the detection distance. Normally, when install the sensor at 5° depression angle, the detection distance is the largest. The detection distance and sensitivity will be changed if mounting height is different.

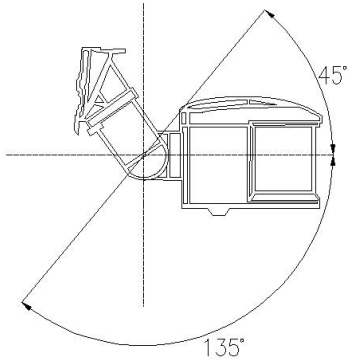

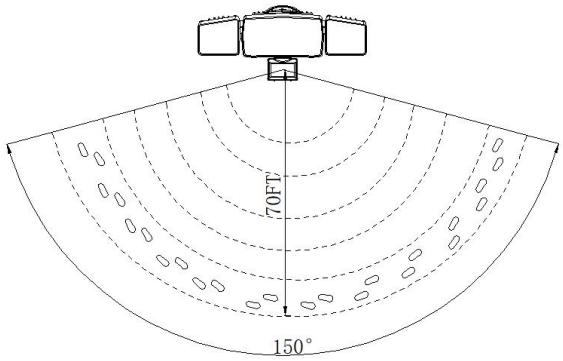

7.5 Instruction for setting motion sensor detection range

7.5.1 To determine the detection range of motion sensor need to perform a simulation test:

Walking around the motion sensor, if the light lighted up, that’s means motion has been detected and give out lighting signal. Stop walking and wait for the light to turn off, then begin walking again.

7.5.2 The motion sensor is less sensitive if in a radial movement, half range of max detection distance, As shown below. (pic 1)

7.5.3 The motion sensor is more sensitive if in a lateral movement. As shown below. (pic 2)

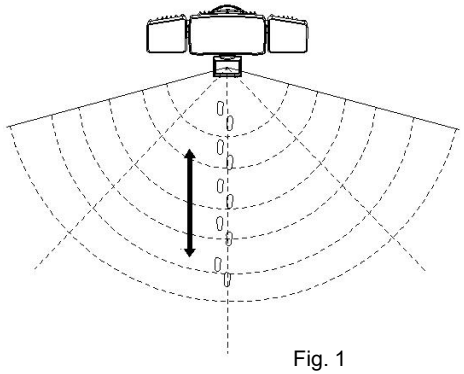

Fig. 1

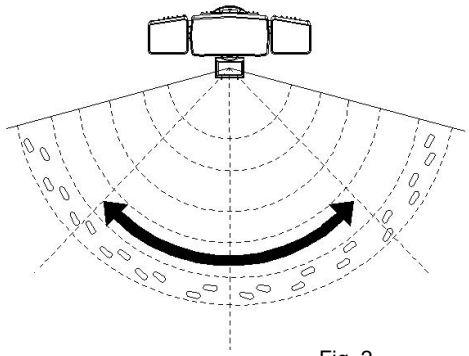

Fig. 2

8. Maintenance

8.1 Care and Cleaning

8.1.1 To prolong the original appearance, suggest to clean the light fixture with clear water and a soft damp cloth.

8.1.2 Do not use paints, solvents, or other chemicals on this light fixture. They could cause a premature deterioration and damage to the finish. This is not a defect in the finish and will not be covered by the warranty.

8.1.3 Do not spray the light fixture with a hose or power washer.