WARRANTY REGISTRATION
enviro.com/warranty

C60I-T

DIRECT VENT FIREPLACE - IPI

OWNER'S MANUAL

Intertek
C#4001609

WARNING: If the information in this manual is not followed exactly, a fire or explosion may result causing property damage, personal injury or loss of life. Installation and service must be performed by a qualified installer, service agency or the gas supplier.

CERTIFIED TO/CERTIFIÉ AUX: ANSI Z21.88 / CSA 2.33 / CSA 2.17

Fr Version Française: www.enviro.com/fr.html

50-4343

Safety Precautions

WARNING:

FIRE OR EXPLOSION HAZARD

Failure to follow safety warnings exactly could result in serious injury, death, or property damage.

- Do not store or use gasoline or other flammable vapors and liquids in the vicinity of this or any other appliance.

- WHAT TO DO IF YOU SMELL GAS

- **Do not try to light any appliance.**
- **Do not touch any electrical switch; do not use any phone in your building.**
- **Leave the building immediately.**
- **Immediately call your gas supplier from a neighbor's phone. Follow the gas supplier's instructions.**
- **If you cannot reach your gas supplier, call the fire department.**

- Installation and service must be performed by a qualified installer, service agency or the gas supplier.

INSTALLER:
Leave this manual with the appliance.

CONSUMER:
Retain this manual for future reference.

This appliance may be installed in an after-market permanently located, manufactured (mobile) home, where not prohibited by local codes.

This appliance is only for use with the type of gas indicated on the rating plate. This appliance is not convertible for use with other gases, unless a certified kit is used.

Only doors certified with the appliance shall be used

Massachusetts installations (Warning): This product must be installed by a licensed plumber or gas fitter when installed within the Commonwealth of Massachusetts. Other Massachusetts code requirements: Flexible connector must not be longer than 36in., a shut off valve must be installed; only direct vent sealed combustion products are approved for bedrooms/bathrooms. A carbon monoxide detector is required in all rooms containing gas fired direct vent appliances. The fireplace damper must be removed or welded in the open position prior to installation of a fireplace insert.

Safety Precautions

FOR SAFE INSTALLATION AND OPERATION OF YOUR "ENVIRO" HEATER, PLEASE CAREFULLY READ THE FOLLOWING INFORMATION:

• All ENVIRO gas-fired appliances must be installed in accordance with their instructions. Carefully read all the instructions in this manual first. Consult the building authority having jurisdiction to determine the need for a permit prior to commencing the installation.

• **NOTE:** Failure to follow these instructions could cause a malfunction of the fireplace, which could result in death, serious bodily injury, and/or property damage.

• Failure to follow these instructions may also void your fire insurance and/or warranty.

GENERAL

• Installation and repair should be done by a qualified service person. The appliance should be inspected before the first use and, at least, annually by a qualified service person. More frequent cleaning may be required due to excessive lint from carpeting, bedding material, etc. It is imperative the control compartments, burners and circulating air passageways of the appliance be kept clean.

• Due to high temperatures, the appliance should be located out of high traffic areas and away from furniture and draperies.

Children and adults should be alerted to the hazards of high surface temperatures and should stay away to avoid burn or clothing ignition.

• Young children should be carefully supervised when in the same room as the appliance. Toddlers, young children and others may be susceptible to accidental contact burns. A physical barrier is required if there is a risk for individuals in the house. To restrict access to a fireplace or stove install an adjustable safety gate to keep toddlers, young children and other at risk individuals out of the room and away from hot surfaces. Any safety screen, guard, or barrier removed for servicing an appliance must be replaced prior to operating the appliance.

• Clothing or other flammable materials should not be placed on or near the appliance.

DANGER

HOT GLASS WILL CAUSE BURNS

DO NOT TOUCH GLASS UNTIL COOLED.

NEVER ALLOW CHILDREN TO TOUCH GLASS.

A barrier designed to reduce the risk of burns from the hot viewing glass is provided with this appliance and must be installed for the protection of children and other at-risk individuals.

• A barrier designed to reduce the risk of burns from the hot viewing glass is provided with this appliance and shall be installed for the protection of children and other at-risk individuals. If the barrier becomes damaged, the barrier shall be replaced with the manufacturer's barrier for this appliance.

FOR YOUR SAFETY

• Installation and service must be performed by a qualified installer, service agency or gas supplier.

• This installation must conform to local codes or, in the absence of local codes, with the National Fuel Gas Code, ANSI Z223.1/ NFPA 54, or the Natural Gas and Propane Installation Code, CSA B149.1.

• To prevent injury, do not allow anyone who is unfamiliar with the stove to operate it.

• To prevent injury, if the pilot or pilot and burners have gone out on their own, open the glass door and wait 5 minutes to air out before attempting to re-light the stove.

• Always keep the area around these appliances clear of combustible material, gasoline and other flammable liquids and vapours.

• These appliances should not be used as a drying rack for clothing or for hanging Christmas stockings/decorations.

• Due to the paint curing on the stove, a faint odor and slight smoking will likely be noticed when the stove is first used. Open a window until the smoking stops.

Always connect this gas stove to a vent system and vent to the outside of the building envelope. Never vent to another room or inside the building. Make sure the specified vent pipe is used, properly sized and of adequate height to provide sufficient draft. Inspect the venting system annually for blockage and signs of deterioration.

WARNING: Failure to position the parts in accordance with the diagrams in this booklet, or failure to use only parts specifically approved with this appliance, may result in property damage or personal injury.

WARNING: Do not operate with the glass front removed, cracked or broken. Replacement of the glass should be done by a licensed or qualified service person.

• Never use solid fuels such as wood, paper, cardboard, coal, or any flammable liquids, etc., in this appliance.

• Do not use this appliance if any part has been under water. Immediately call a qualified service technician to inspect the appliance and to replace any part of the control system or any gas control which has been under water.

• Do not abuse the glass by striking it or slamming the door shut.

• If the C60I-T unit is pulled out of its installation, and the vent-air intake system is disconnected for any reason, ensure that the vent-air intake pipes are reconnected and re-sealed in accordance to the instructions noted in Initial Installation - Direct Vent

Table of Contents

Safety Precautions **2**

Table of Contents **4**

Codes And Approvals **6**

Specifications **7**

Dimensions 7

Rating Label & Lighting Instructions Location 7

Operating Instructions **8**

Lighting Instructions 8

Air Shutter (Venturi) 9

Normal Sounds During Operation 9

Remote Control Operations 9

System Description 10

Technical Data 10

Transmitter 10

Integrated Fireplace Controller (IFC) 11

Operating Procedure 12

Switching to Continuous Pilot Mode 12

Maintenance And Service **15**

Routine Maintenance 15

Cleaning The Glass 15

Cleaning The Firebox 15

Replacing the Glass 15

Cleaning Decorative Surfaces 16

Safety Screen 16

Upper Discharge and Bottom Trim Removal 16

Glass Door Removal 17

Burner Removal 17

Access panels 18

Intake Shield Removal 18

Fuel Conversion 18

Fuel Conversion 18

Initial Installation **21**

Introduction 21

Unit Install Preperation 21

Steel Stud 22

Placement and Framing 23

Cool Surface Activation 24

Cool Surface Framing 25

Alternate Gas Inlet Location 26

Floor Protection 26

Vent Termination Framing 27

Mantel Requirements 28

Installation with Recess 30

Corner Installation 31

Table of Contents

Horizontal Vent install 32
Vertical Vent install 32
Outdoor Install 33
Flex Venting 34
Clearances & Non-Combustible 35
TV Installation Considerations 36
Vent Termination Restrictions 37
Direct Vent 37
Venting Clearances 38
Approved Venting Parts 39
Allowable Co-Axial Vent Configurations 40
Exhaust Restrictor Setting 42
Horizontal Termination 43
Vertical Termination 44
Gas Line Connection and Testing 47
Electrical Requirements 48
C60 IPI Dual Covection Fan Kit (50-4173). 49

Secondary Installation 51
C60 Light Kit (50-3342) 51
Burner Tray Installation 51
Bezel Installation 52
Panel and Media Installation 52

Trouble Shooting 55

Parts Diagram 56

Parts List 57

Notes 58

Codes And Approvals

DIRECT VENT ONLY: This type is identified by the suffix DV. This appliance draws all of its air for combustion from outside the dwelling, through a specially designed vent pipe system.

This appliance has been tested and approved for installations from 0 feet to 4500 feet (1372 m) above sea level.

In the USA: The appliance may be installed at higher altitudes. Please refer to your American Gas Association guidelines which state: the sea level rated input of Gas Designed Appliances installed at elevations above 2000 (610 m) feet is to be reduced 4% for each 1000 feet (305 m) above sea level. Refer also to local authorities or codes which have jurisdiction in your area regarding the de-rate guidelines.

In Canada: When the appliance is installed at elevations above 4500 feet (1372 m), the certified high altitude rating shall be reduced at the rate of 4% for each additional 1000 feet (305 m).

This appliance has been tested by INTERTEK and found to comply with the established VENTED GAS FIREPLACE HEATER standards in CANADA and the USA as follows:

VENTED GAS FIREPLACE HEATER (C60I-T ; NATURAL GAS, PROPANE GAS)

TESTED AND LISTED TO: ANSI Z21.88 /CSA 2.33 VENTED GAS FIREPLACE HEATERS

CSA 2.17 GAS FIRED APPLIANCES FOR HIGH ALTITUDES

CSA P.4.1 TESTING METHOD FOR MEASURING ANNUAL FIREPLACE EFFICIENCY

This ENVIRO C60I-T Fireplace:

- Has been certified for use with either natural gas or propane (see rating label).
- Is not for use with solid fuels.
- Is approved for a bedroom or bed sitting room. (**IN CANADA**: must be installed with a listed wall thermostat. **IN USA**: see current ANSI Z223.1 for installation instructions.)
- Must be installed in accordance with local codes. If none exist, use current installation code CAN/CGA B149.1 in Canada or ANSI Z223.1/NFPA 54 in the USA.
- Must be properly connected to an approved venting system and not connected to a chimney flue serving a separate solid-fuel burning appliance.

IMPORTANT NOTICE (Regarding first fire up): When the unit is turned on for the first time, it should be turned onto high without the fan on (if equipped) for the first 4 hours. This will cure the paint, logs, gasket material and other products used in the manufacturing process. It is advisable to open a window or door, as the unit will start to smoke and can irritate some people. After the unit has gone through the first burn, turn the unit off including the pilot, let the unit get cold then remove the glass door and clean it with a good gas fireplace glass cleaner, available at your local ENVIRO dealer.

NATIONAL FIREPLACE INSTITUTE®

NFI

CERTIFIED

www.nficertified.org

We recommend that our gas hearth products be installed and serviced by professionals who are certified in the U.S. by the National Fireplace Institute® (NFI) as NFI Gas Specialists.

Dimensions

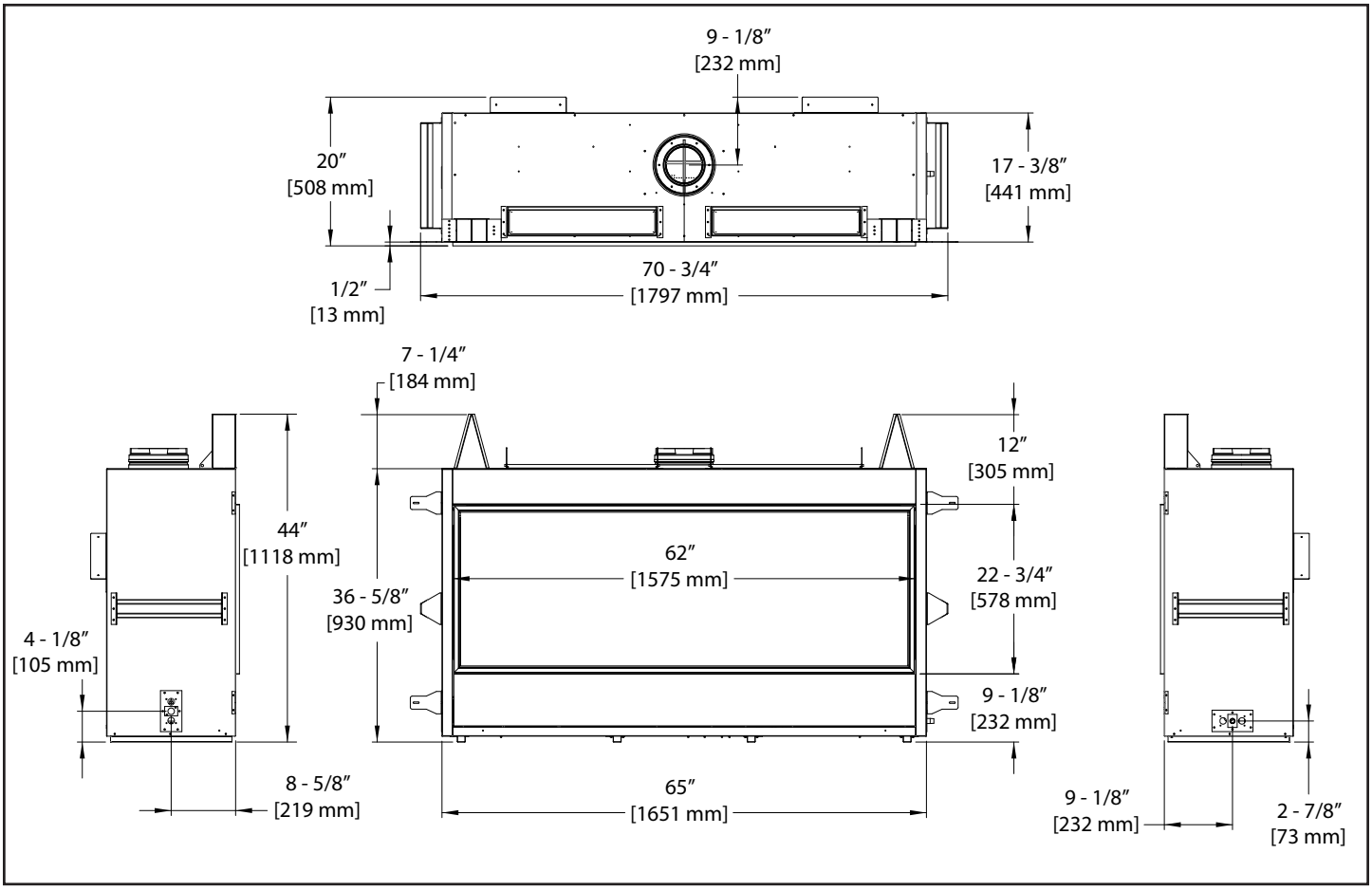

Figure 1: Unit Dimensions

Rating Label & Lighting Instructions Location

Remove the screen to access the rating label and lighting instructions. The plates are attached to a length of chain and are never to be tampered with or removed. All important information for your fireplace is on this label as well of the model specific serial number which you will need for warranty information. The plates are located inside the cabinet on the left side near the front.

For Your Safety, Read Safety Precautions And Lighting Instructions Before Operating

WARNING: IF YOU DO NOT FOLLOW THESE INSTRUCTIONS EXACTLY A FIRE OR EXPLOSION MAY RESULT, CAUSING PROPERTY DAMAGE, PERSONAL INJURY OF LOSS OF LIFE.

Lighting Instructions

FOR YOUR SAFETY READ BEFORE OPERATING

WARNING: IF YOU DO NOT FOLLOW THESE INSTRUCTIONS EXACTLY, A FIRE OR EXPLOSION MAY RESULT CAUSING PROPERTY DAMAGE, PERSONAL INJURY OR LOSS OF LIFE.

A. This appliance is equipped with an ignition device which automatically lights the pilot. Do not try to light the pilot by hand.
B. BEFORE OPERATING smell all around the appliance area for gas. Be sure to smell next to the floor because some gas is heavier than air and will settle on the floor.
WHAT TO DO IF YOU SMELL GAS:

- Do not try to light any appliance.
- Do not touch any electrical switch; do not use any phone in your building.
- Immediately call your gas supplier from a neighbor's phone. Follow the gas supplier's instructions.
- If you cannot reach your gas supplier, call the fire department.

C. Use only the remote supplied with this fireplace. Never use tools, don't try to repair it, call a qualified service technician. Force or attempted repair may result in a fire or explosion.
D. Do not use this appliance if any part has been under water. Immediately call a qualified service technician to inspect the appliance and to replace any part of the control system and any gas control which has been under water.

OPERATING INSTRUCTIONS

1. STOP! Read the safety information above on this label.
2. Read the owner's manual including the section on "Remote Control" operation.
3. Turn off all electric power to the appliance.
4. Do not attempt to light the pilot by hand.
5. Wait five (5) minutes to clear out any gas. Then smell for gas, including near the floor. If you smell gas, STOP! Follow "B" in the safety information above on this label. If you don't smell gas, go to the next step.
6. Turn on all electric power to the appliance.
7. Using the remote control, press the ON/OFF key on the remote. "ON" will be indicated on the display of the remote and an audible "beep" will be heard at the unit to indicate the command has been received.

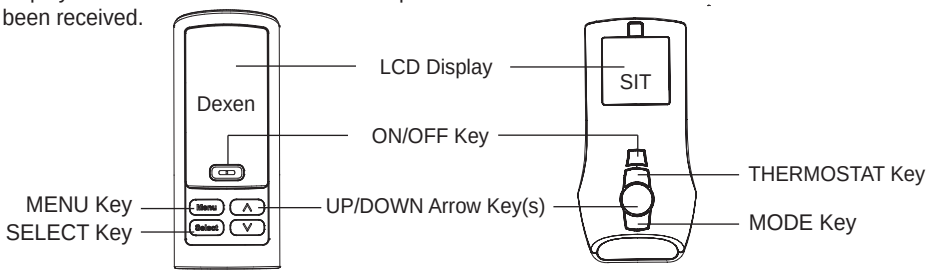

8. If the appliance will not operate, follow the instructions "To Turn Off Gas To Appliance" and call your service technician or gas supplier.

TO TURN OFF GAS TO APPLIANCE

1. Set thermostat to lowest setting, or press the ON/OFF or Power Key. "OFF" will be indicated on the display and an audible "Beep" will be heard at the unit to indicate the command has been received.
2. Turn off all electric power to the appliance if service is to be performed.

C-16320

Figure 2: Lighting Instruction Label

Air Shutter (Venturi)

The air shutter plays a very important role in flame appearence and combustion quality. The shutter adjusts how much air gets mixed with the gas before it ignites. Adjustments can be made to accomodate various climates and vent configurations.

To gain access to the air shutter remove the safety screen and intake shield. There is a lever underneath the firebox near the gas valve as shown in Figure 3. Moving the lever to the right will close off the air mixing with the gas and will make the flame appear more yellow and tall. Moving the lever to the left will open up the shutter allowing more air to be mixed with the incoming gas; this will make the flames appear more blue and short.

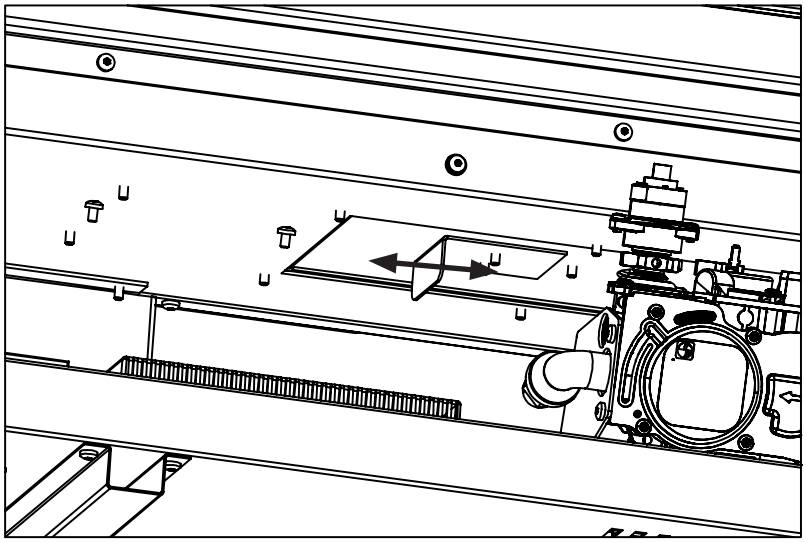

Figure 3: Air shutter adjustment lever

Typically natural gas flames will require the shutter to be more closed.

Typically LP flames will require the shutter to be more open.

If you cannot attain the proper flame by making air shutter adjustments then you may have the incorrect exhaust restrictor.

If the flame is very flickery, fast moving, and low then increase the restriction.

If the flame is very tall, lazy, and dirty then decrease the restriction.

More details can be found in the venting section of this manual.

Caution: Wear heat resistent gloves when making adjustments to the air shutter. Perform adjustments after 15 minutes.

Normal Sounds During Operation

Table 1: Normal Sounds

Component	Sound & Reason
Main Unit	Creaking when heating up or cooling down.
Burner	Light pop or poof when turned off; this is more common with LP units.
Temperature Sensor	Clinking when it senses to turn the blower on or off.
Pilot Flame	Quiet whisper while the pilot flame in on.
Blower / Fan	Air movement that increase and decreases with the speed of the blower. The blower is pushing the heat from the fireplace into the room.
Gas Control Valve	Dull click when turning on or off, this is the valve opening and closing.

Remote Control Operations

Proflame 2 is a modular remote control system that directs the functions of the C60I-T. The Proflame 2 transmitter (remote) is configured to control the on/off main burner operation, its flame levels and provides on/off and thermostatic control of the appliance. The system also controls the optional fan speed through six (6) levels and can control the operation of the option light kit.

System Description

The Proflame 2 Remote Control System consists of two (2) elements:
1. Proflame 2 Transmitter.
2. Integrated Fireplace Controller (IFC) and wiring harness to connect to the gas valve, stepper motor battery holder, and convection fan.

ATTENTION!

- TURN "OFF" THE MAIN GAS SUPPLY OF THE APPLIANCE DURING INSTALLATION OR MAINTENANCE OF THE IFC.

- TURN "OFF" MAIN GAS SUPPLY TO THE APPLIANCE PRIOR TO REMOVING OR REINSERTING THE BATTERIES IN THE BATTERY HOLDER

Technical Data

Transmitter (Remote Control):

Supply voltage: 4.5 V (three 1.5 V AAA batteries)
Radio frequency: 315 MHz

Integrated Fireplace Controller (IFC):

Supply voltage: AC IN - 120 V / 60 Hz
Battery Backup IN - 6 Vdc - 200mA (four 1.5 V AA batteries)
Spark voltage / frequency: >10kV / 1Hz
Comfort modulating fan: 120 V / 60 Hz / 2A
Auxiliary: 120 V / 60 Hz / 5A

Transmitter

The Proflame 2 Transmitter is a black remote control with a blue backlit lcd display. It uses a streamline design with a simple button layout and informative lcd readout (Figure 5). The Transmitter is powered by three (3) AAA type batteries. A Mode Key is provided to Index between the features and a Thermostat Key is used to turn on/off or index through Thermostat functions (Figure 4 & Figure 5)

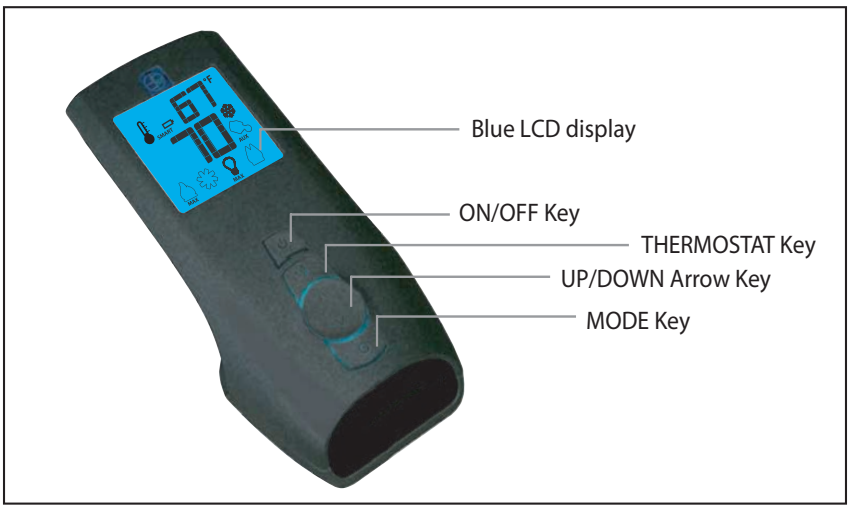

Figure 4: Proflame 2 Transmitter.

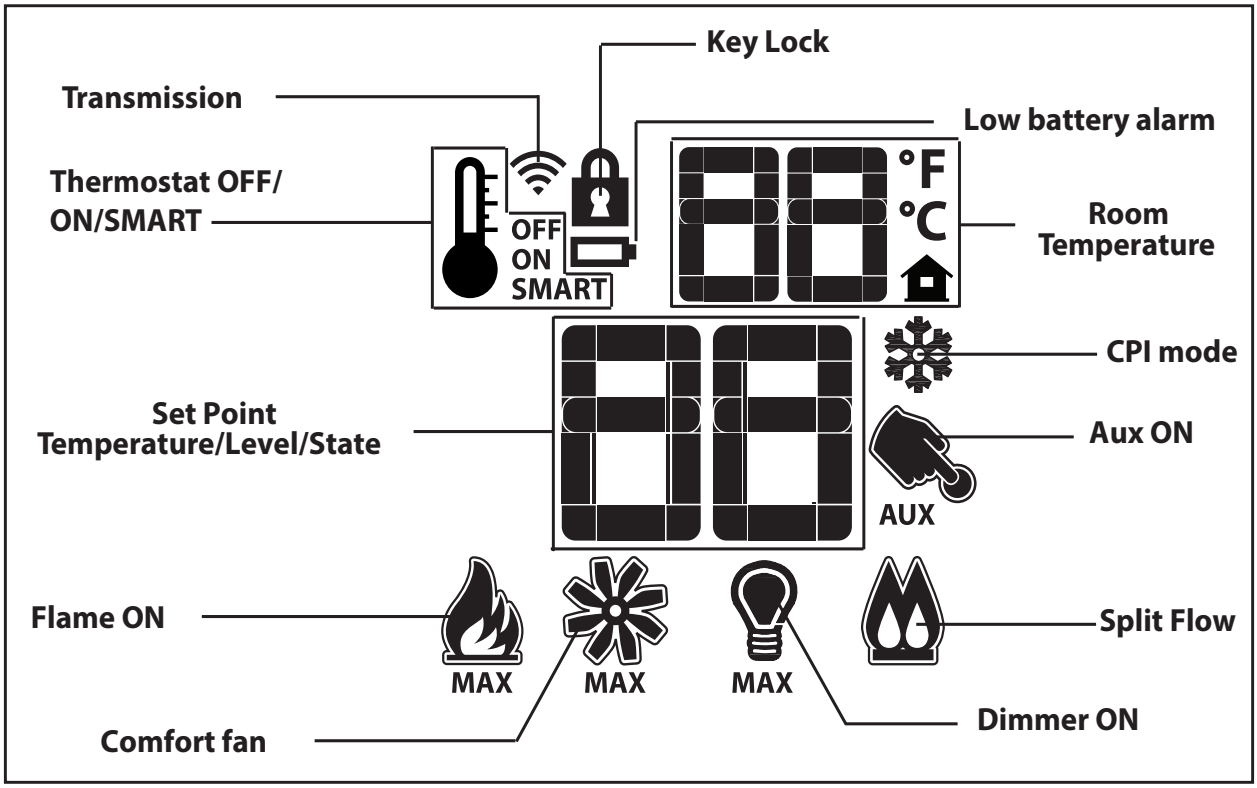

Figure 5: Proflame 2 Transmitter LCD Screen.

Integrated Fireplace Controller (IFC)

The Proflame 2 IFC (Figure 6) connects directly to the gas valve, stepper motor, pilot, covection fans (optional) and light kit (optional) with a wiring harness. The IFC is mainly powered by 120 VAC but can also run off a battery backup four (4) AA type batteries for shorter periods of time. The IFC accepts commands via radio frequency from the Transmitter to operate the appliance in accordance with the particular Proflame 2 system configuration. The IFC has a red reset button at the front right corner that is used is to synchronize the Transmitter when using the for the first time, or after the batteries have been replaced.

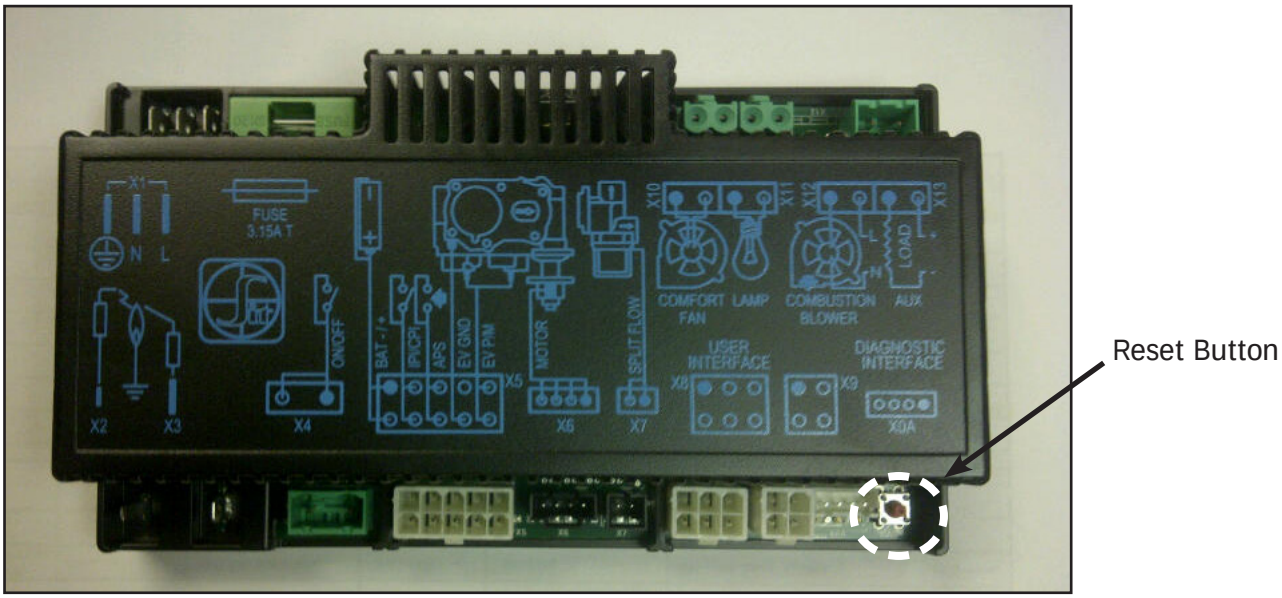

Figure 6: Integrated Fireplace Controller

Operating Procedure

Initializing The System For The First Time

Install the four (4) AA batteries into the IFC battery holder. Note the polarity of the battery and insert into the battery bay as indicated on the body of the battery holder. Press the reset button on the IFC marked “SW1” (see Figure 6).

The IFC will “beep” three (3) times to indicate that it is ready to synchronize with a Transmitter. Install the three (3) AAA type batteries in the Transmitter battery bay, located on the base of the Transmitter. With the batteries already installed in the Transmitter, push the ‘ON’ button. The IFC will “beep” four (4) times to indicate the Transmitter’s command is accepted and sets to the particular code of that Transmitter. The system is now initialized.

Temperature Indication Display

With the system turned OFF, press the Thermostat Key and the Mode Key at the same time. Look at the LCD screen on the transmitter to verify that a °C or °F is visible to the right of the Room Temperature display (see Figure 7).

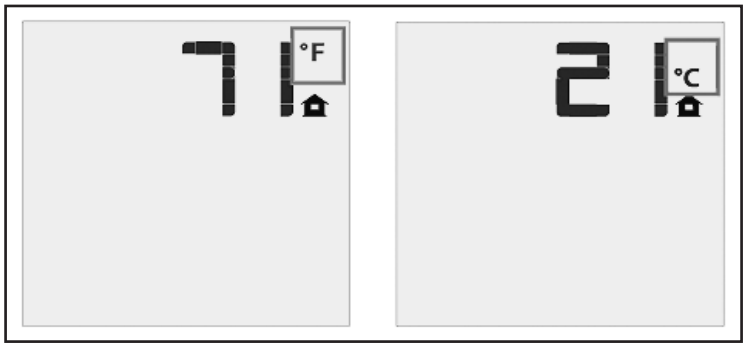

Figure 7: Remote Control Display in Farenheit and Celcius.

Turn on the Appliance

Press the ON/OFF Key on the Transmitter. The Transmitter display will show all active Icons on the screen. A single “beep” from the IFC will confirm reception of the command and will commence to first ignite the pilot light, followed by the main burner. This should take about 10 seconds to complete.

Switching to Continuous Pilot Mode

When the C60I-T is turned off press the mode key to index to the constant pilot (CPI) mode icon (see Figure 8). Pressing the up arrow key will select Continuous Pilot Ignition (CPI) and pressing the down arrow key will return to IPI. Once a selection is made the IFC will beep once to confirm it had received the command. **NOTE: It is recommended to use the continuous pilot mode during the winter when the outside temperature is below 50°F (10°C) to keep the chimney properly heated for updraft during burner ignition.** Continuous pilot mode also keeps the firebox warm which eliminates both heat loss to cold air that is trapped inside the firebox as well as excessive exhaust vapour condensation on the door glass.

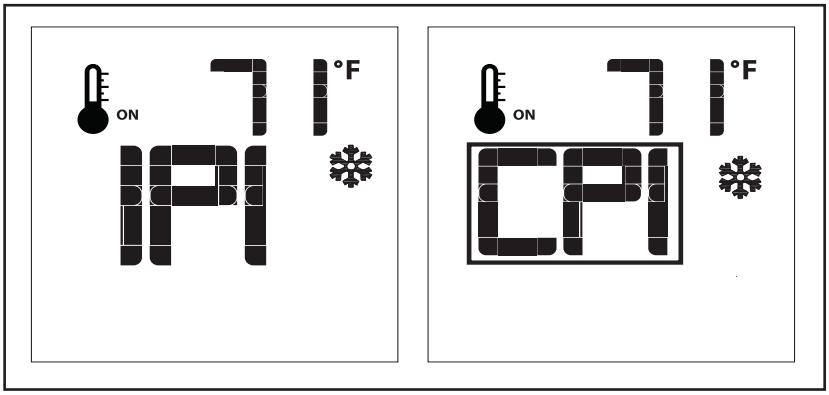

Figure 8: CPI Pilot Mode.

Turn off the Appliance

Press the ON/OFF Key on the Transmitter. The Transmitter LCD display will only show the room temperature and Icon (see Figure 9). A single "beep" from the IFC confirms reception of the command and both the pilot light (if the unit is not set to continuous pilot) and main burner will turn off.

Room Thermostat (Transmitter Operation)

The Remote Control can operate as a room thermostat. The thermostat can be set to a desired temperature to control the comfort level in a room. To activate this function, press the Thermostat Key (see Figure 4). The LCD display on the Transmitter will change to show that the room thermostat is "ON" and the set temperature is now displayed (see Figure 9). To adjust the set temperature, press the Up or Down Arrow Keys until the desired set temperature is displayed on the LCD screen of the Transmitter.

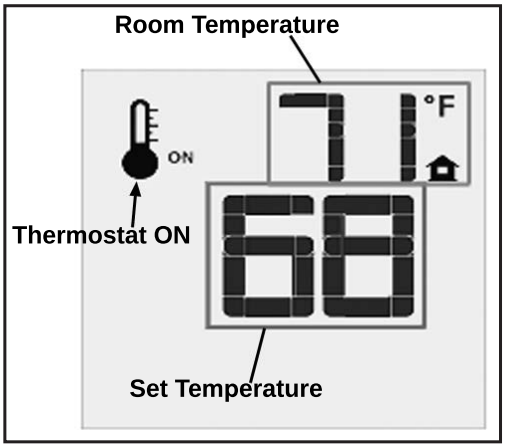

Figure 9: Remote Control Displays Set Temperature.

Smart Thermostat (Transmitter Operation)

The Smart Thermostat function adjusts the flame height in accordance to the difference between the set point temperature and the actual room temperatures. As the room temperature gets closer to the set point the Smart Function will modulate the flame down. To activate this function, press the Thermostat Key (Figure 4) until the word "SMART" appears to the right of the temperature bulb graphic (Figure 10). To adjust the set temperature, press the Up or Down Arrow Keys until the desired set temperature is displayed on the LCD screen of the Transmitter.

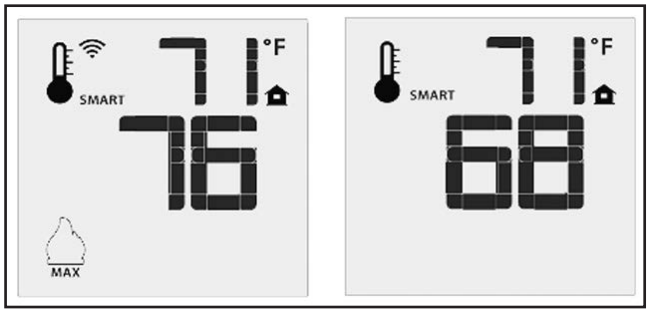

Figure 10: Remote Control's Smart Flame Function.

Remote Flame Control

The Proflame 2 remote control system has six (6) flame levels. With the system on, and the flame level at the maximum in the appliance, pressing the Down Arrow Key once will reduce the flame height by one step until the flame is turned off. The Up Arrow Key will increase the flame height each time it is pressed. If the Up Arrow Key is pressed while the system is on but the flame is off, the flame will come on in the high position. A single "beep" will confirm reception of the command.

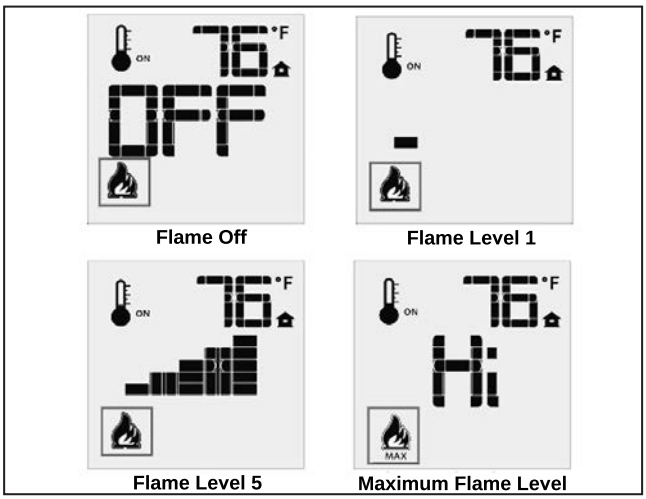

Figure 11: Remote Control's Flame Levels.

Fan Control

The C60I-T has a dual convection fan kit that can be controlled with the Transmitter. The fan speed can be adjusted thorugh six (6) speeds. To control the fan press the Mode key to index to the fan control icon. Use the UP/DOWN arrow keys to turn on, off, or adjust the fan speed. A single beep from the IFC will confirm the command has been received

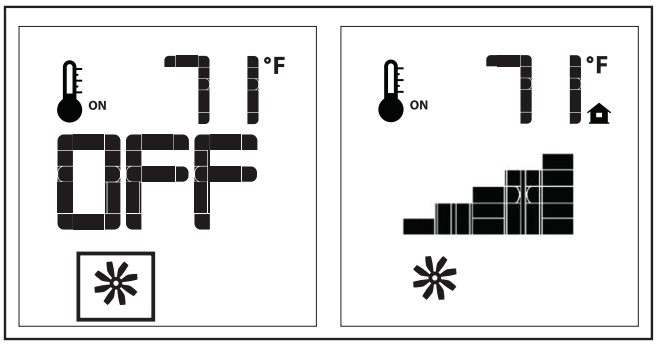

Figure 12: Fan Control

Top Light Control
This function is not used on the C60I-T and can be disregarded.

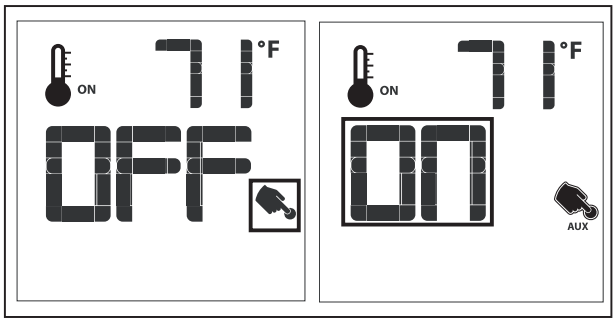

Figure 13: Aux Control

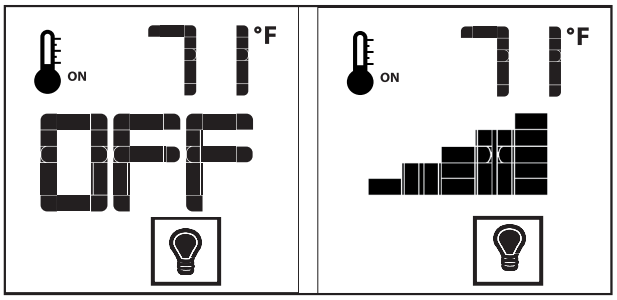

Figure 14: Dimmer Control

Dimmer Control
This is only appliciable if the light kit has been installed. Press the mode key until the light bulb symbol is visable (Figure 14). This turn the lights on and off as well as adjust 6 dimming levels.

Key lock
This function will lock the keys to avoid unsupervised operation. To activate this function, press the Mode and UP keys at the same time and the a lock will appear (see Figure 15). To de-activate this function, press the Mode and UP Keys at the same time.

Figure 15: Key Lock

Low Battery Power Detection
Transmitter: The life span of the remote control batteris depends on various factors: quality of the batteries used, the number of ignitions of the appliance, the number of changes to the room thermostat set point etc. When the Transmitter batteries are low, a Bettery Icon will appear on the LCD display of the Transmitter (see Figure 16) before all battery power is lost. When the batteries are replaced this icon will disappear.

IFC: The life span of the IFC batteries depends on various factors during a prolonged power outage: quality of the batteries used, the number of ignitions of the appliance, the number of changes to the room thermostat set point etc. When the IFC batteries are low, No "beep" will be emitted when it receives an On/Off command from the Transmitter. This is an alert for a low battery condition for the IFC. When the batteries are replaced the "beep" will be emitted from the IFC when the ON/OFF Key is pressed (See Initializing the System for the First Time).

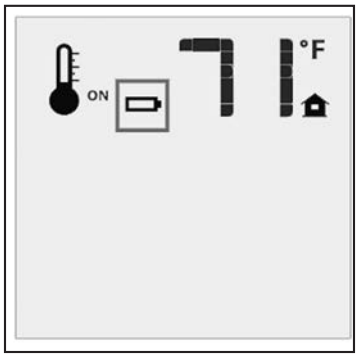

Figure 16: Low Battery

WARNING: Fire Hazard. Can cause severe injury or death. The Transmitter causes ignition of the appliance. The appliance can turn on suddenly. Keep away from the appliance burner when operating the remote system.

WARNING: Shock Hazard. Can cause severe injury or death. This device is powered by line voltage. Do not try to repair this device. In no way is the enclosure to be tampered with or opened. Disconnect from line voltage before performing any maintenance.

CAUTION: Property Damage Hazard. Excessive heat can cause property damage. The appliance can stay lit for many hours. Turn off the appliance if it is not going to be attended for any length of time. Always place the Transmitter where children cannot reach it.

Routine Maintenance

At least once a year, run through the following procedures to ensure the system is clean and working properly. Check the burner to see if all the ports are clear and clean. Check the pilot to make sure it is not blocked by anything. The pilot flame should be blue with little or no yellow on the tips.

Warning: Clearances must be sufficient to allow access for maintenance and service.

Warning: Failure to position the parts in accordance with this manual, or failure to use only parts specifically approved with this appliance may result in property damage or personal injury.

The venting system must be periodically examined; it is recommended the examination is done by a qualified agency.

Cleaning The Glass

When the fireplace has cooled, remove the safety screen and glass door. See Maintenance And Service - Glass Door Removal. Check the gasket material on the back of the glass, making sure that it is attached and intact.

During a cold start up, condensation will sometimes form on the glass. This is a normal condition with all fireplaces. However, this condensation can allow dust and lint to cling to the glass surface. Initial paint curing of the appliance can leave a slight film behind the glass, a temporary problem. The glass will need cleaning about two weeks after installation. **Use a mild glass cleaner and a soft cloth**. **Abrasive cleaners will damage the glass and painted surfaces.** Depending on the amount of use, the glass should require cleaning no more than two or three times a season. **Do not clean the glass when it is hot.**

Cleaning The Firebox

Remove the logs carefully, as they are very fragile. Gently remove all the media and place on a paper towel. Vacuum the bottom of the firebox thoroughly. Carefully clean any dust off the logs and remove any lint from the burner and pilot. At this time, inspect the burner tube for cracking or severe warping. If a problem is suspected, contact the dealer. Check the logs for deterioration or large amounts of soot; a small amount on the bottom side of the logs is normal. Replace the logs as shown in the Secondary Installation - Log Set Installation section. If new/more media is required, contact your nearest ENVIRO dealer.

Replacing the Glass

The glass in the fireplace is a high temperature ceramic. If the glass is damaged in any way, a factory replacement is required (see Parts List). Wear gloves when handling damaged glass door assembly to prevent personal injury. Do not operate with the glass front removed, cracked or broken. Removal and replacement of the glass from the door **must** be done by a licensed or qualified service person. **The glass must be purchased from an ENVIRO dealer. No substitute materials are allowed.** To remove the door (see page 17). The replacement glass will come with a new gasket installed. Remove any silicone remnants from the door. Apply high temperature silicone to the two vertical faces of the door and install the new piece of glass with gasket (be sure to maintain edge clearances). Apply even pressure to the glass to allow the silicone to adhere to the gasket material.

Cleaning Decorative Surfaces

Painted and porcelain faces should be wiped with a damp cloth periodically. If a plated face has been purchased, it should be unpacked/unwrapped carefully to avoid getting anything on the surface of the finish, including cleaners, polish and finger prints. It is important to note that fingerprints and other marks can leave a permanent stain on plated finishes. **To avoid this, give the face a quick wipe with denatured alcohol on a soft cloth BEFORE lighting the fireplace.** Never clean the face when it is hot. Do not use other cleaners as they may leave a residue, which can become permanently etched into the surface.

Safety Screen

A safety screen is installed from the manufacture to protect its users from the dangers of the hot glass preceding it. There are four safety screen mounting brackets that hold the screen into position as shown in Figure 17. In order to remove the safety screen it is easiest to grab the inside of the upper frame peice and lift up and out in order to diancage it from the mounting hooks.

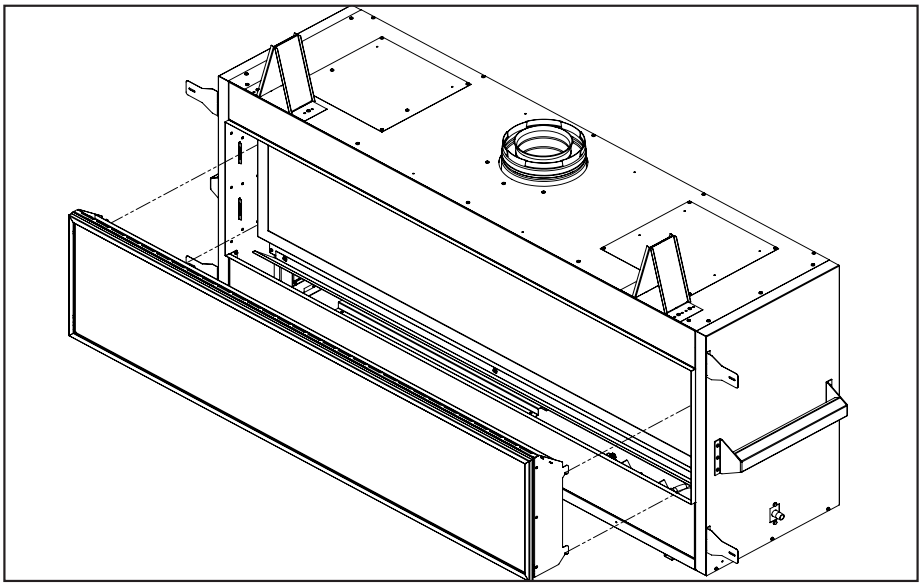

Figure 17: Safety Screen Hook Disengagement

Upper Discharge and Bottom Trim Removal

First, remove the safety screen as shown in the previous section.

The upper discharge and bottom trim need to be removed prior to removing the glass door. Both pieces do not require any fasteners to be removed, they are slotted onto studs on the top and bottom of the fireplace opening. The upper discharge (located near the top of the glass door) should be lifted up to disengage from the studs and removed. The bottom trim (located near the bottom of the glass door) can be pulled directly out. Refer to Figure 18 for clarity.

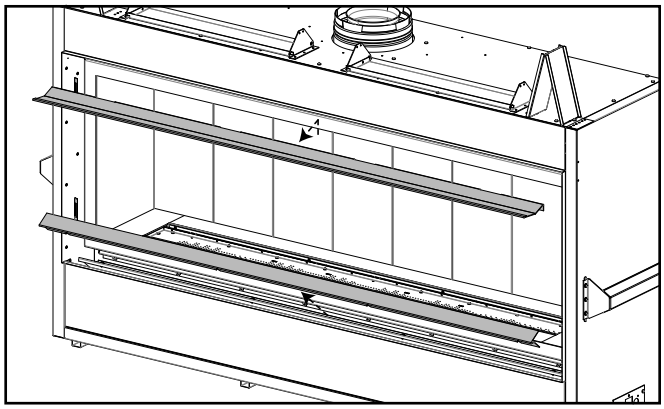

Figure 18: Upper Discharge and Bottom Trim Removal

Glass Door Removal

First, remove the upper discharge, and bottom trim. Refer to section "Upper Discharge and Bottom Trim Removal" on page 16 for more information.

To remove the glass door use a 3/8 socket to remove the 4 upper bolts and rotate outward. To replace the door simply reverse the order; do not over tighten the bolts or they may strip.

WARNING: Do not touch or attempt to remove the glass door if the fireplace is not completely cold.

WARNING: Never operate the fireplace with the glass door removed.

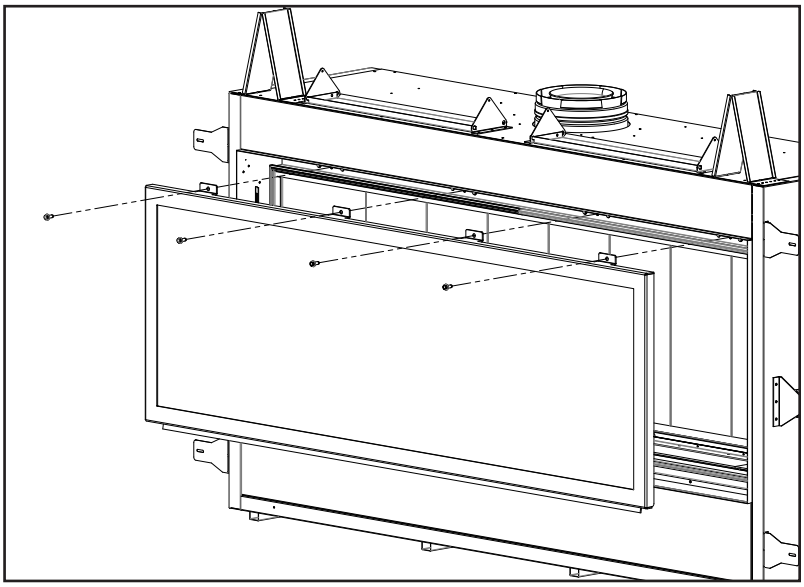

Figure 19: Door Removal Motion

Burner Removal

The burner will need to be removed for maintenance and fuel conversion. Follow the procedure carefully. **Proceed only when the unit has completely cooled down.**

1. Remove the safety screen as shown in Maintenance and Service - Safety Screen Removal.
2. Remove the glass door as shown in the Maintenance and Service - Glass Door Removal.
3. Remove log set or high definition rock set (if installed).
4. Remove any media from the media tray.
5. Remove the media tray as shown in Secondary Installation - Media Tray Removal.
6. Remove the six T-20 screws securing the burner pan as shown in Figure 20; do NOT remove the other T-20 screws. Once the specified screws are removed slide burner to the left and lift out to remove.

To re-install the burner follow steps above in reverse. When placing the burner back in the unit be sure not to move the air shutter. **Make sure the burner is slid all the way in or the mounting holes will not line up. Do not over tighten the burner screws or they might strip; just get them snug.**

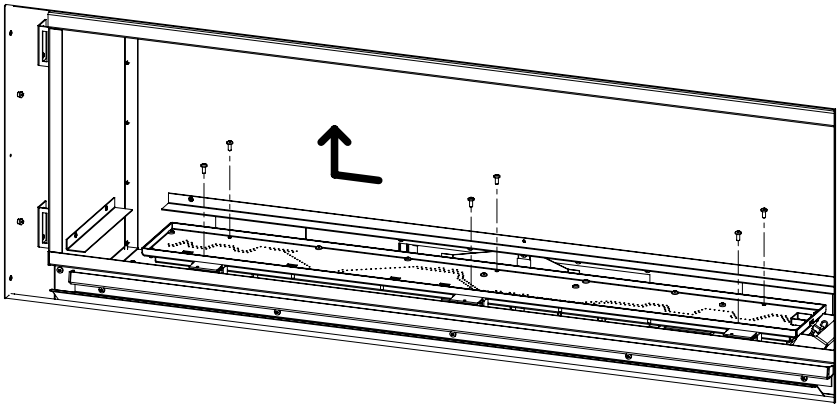

Figure 20: Removing Burner

Access panels

There are two access doors in the bottom on the firebox that is used for servicing components after the unit is installed in a construction enclosure. **Proceed only when the unit has completely cooled down.**

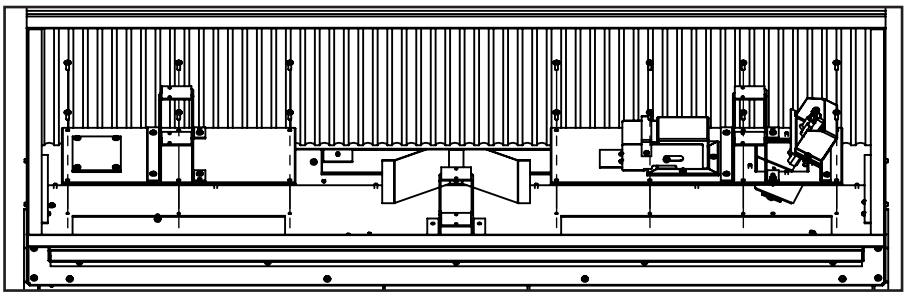

Figure 21: Removing Access Door

1. Remove the burner and burner tray as shown in the Maintenance and Service - Burner Removal.
2. Remove the (14) T-20 bolts retaining the access panels as shown in Figure 21.
3. After servicing assemble in the reverse order and be sure the gasket is still intact. Replace if necessary.

Intake Shield Removal

You will need to remove the Intake Shield to gain access to the components below and make adjustments to the air shutter. To remove the shield simply lift it up off the slots.

DO NOT run the unit without the Intake Shield as it allows the unit to evacuate heat and protect the components.

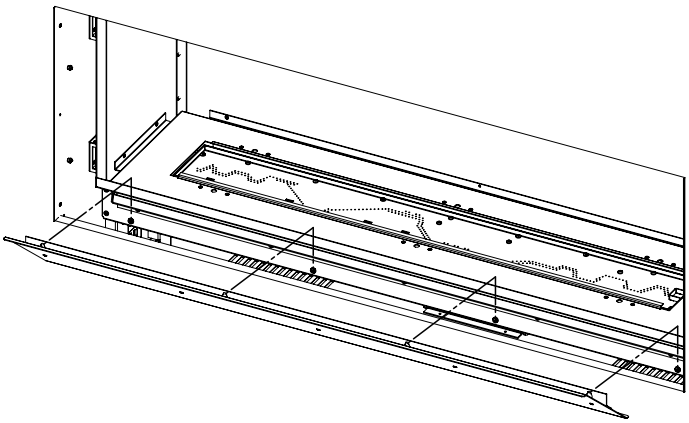

Figure 22: Removing Intake Shield

Fuel Conversion

TO BE INSTALLED BY A QUALIFIED SERVICE AGENCY ONLY
Please read and understand these instructions before installing.

Warning: This conversion kit shall be installed by a qualified service agency in accordance with the manufacturer's instructions and all applicable codes and requirements of the authority having jurisdiction. If the information in these instructions is not followed exactly, a fire, explosion or production of carbon monoxide may result causing property damage, personal injury or loss of life. The qualified service agency is responsible for the proper installation of this kit. The installation is not proper or complete until the operation of the converted appliance is checked as specified in the manufacturer's instructions supplied with the kit.

Fuel Conversion

Kit Parts List for C60I-T Model:

1 - Orifice (**NG** - #28 DMS or **LP** - #44 DMS)
1 - Installation instruction sheet
1 - Stepper regulator with hardware
2 - Conversion labels
1 - Pilot Orifice (NG: 0.2) or (LP: 0.14)
1 - C60T LP Burner

Carefully inspect all parts supplied with this conversion kit. If any parts have been damaged or are missing, contact your dealer, distributor or courier company to have them replaced before starting this installation.

Conversion Kit Installation:

1. Turn the unit off by pressing the ON/OFF Key on the remote and shut off gas supply at the shut-off valve upstream of the unit. **CAUTION: The gas supply must be shut off prior to disconnecting the electrical power and before proceeding with the conversion. Allow the valve and unit to cool down to room temperature.**
2. Remove Safety Screen/Surround Panel and the glass door as shown in the MAINTENANCE AND SERVICE - GLASS DOOR REMOVAL section of this manual.
3. Carefully remove any media and logs.
4. Remove the burner as shown in the MAINTENANCE AND SERVICE - BURNER REMOVAL section of this manual.
5. Convert the pilot injector:
   a. Using a 7/16" wrench, loosen the pilot head counter clockwise and fully remove.
   b. Remove the existing orifice and replace with the one supplied in the kit (Figure 23).
   c. Re-install the pilot head and tighten until it is back in the proper position (Figure 24).
6. Convert the burner orifice:
   a. Remove the main burner orifice with a 3/8" deep socket
   b. Put a bead of pipe-thread sealant into the orifice mount, install oriface from kit. DO NOT OVER-TIGHTEN.
7. Convert the Venturi Box:
   a. Remove the four T-20 screws holding the Venturi Reducer and Venturi Block Off Plate. Figure 25
   b. Remove the Venturi Reducer and venturi Block Off Plate
8. Convert the SIT gas valve:
   a. Use a T-20 driver to remove the two screws that hold the stepper regulator to the gas valve and disconnect the wire harness from the IFC.
   b. Remove the rubber regulator diaphragm that is situated between the stepper regulator and the valve body. The new stepper regulator already has this diaphragm installed.
   c. Install the LP (or NG) stepper regulator, with the new longer T-20 screws included in the kit and connect the harness to the IFC.
9. Install the new LP Burner
10. Reinstall burner media, and glass door.

Figure 23: Pilot Orifice

Figure 24: Proper Pilot Position

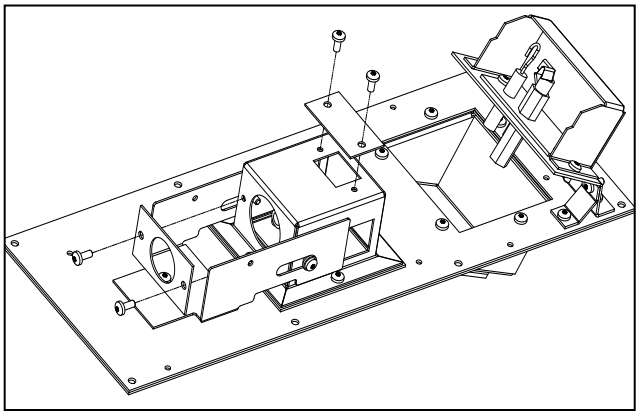

Figure 25: 885 Gas Valve

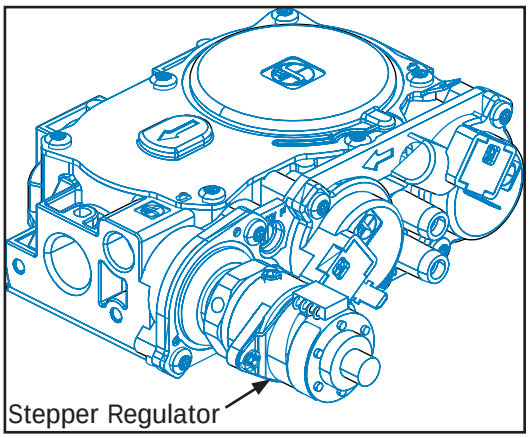

Figure 26: 885 Gas Valve

11. Convert the SIT gas valve:
    a. Use a T-20 driver to remove the two screws that hold the stepper regulator to the gas valve and disconnect the wire harness from the IFC.
    b. Remove the rubber regulator diaphragm that is situated between the stepper regulator and the valve body. The new stepper regulator already has this diaphragm installed.
    c. Install the LP (or NG) stepper regulator, with the new longer T-20 screws included in the kit and connect the harness to the IFC.
12. Install the new LP burner, burner media, and glass door. Also refer to the Secondary Installation section in the Owner's Manual. When re-installing the burner, ensure that the burner slides all the way to the right into the venturi box. Reconnect the main gas line if it was disconnected and open the shut-off valve at the gas line to the unit.
13. Reconnect the electrical power to the unit.
14. Use a small brush to apply a warm soapy water solution to all gas connections (use a half dish soap and half warm water). If a gas leak is present, bubbling will occur. Gas leaks can be repaired by using an approved pipe thread sealant or approved Teflon tape. NEVER USE AN OPEN FLAME WHEN TESTING FOR LEAKS.
15. Relight the pilot and confirm the flame properly covers the flame sensor hook (see Figure 27). Should the pilot require adjustment, turn the adjustment screw clockwise to decrease or counterclockwise to increase until the correct flame is achieved.
16. Relight the main burner in both the "HI" and "LO" positions to verify proper burner ignition, operation and proper flame appearance. Confirm the inlet and manifold pressures are within the acceptable ranges as directed in section Intial Intallation - Gas Line Connection and Testing. If the unit has been installed at an altitude higher than 2000ft (610m) it is required to de-rate the unit accordingly:

    In the USA: The appliance may be installed at higher altitudes. Please refer to your American Gas Association guidelines which state: the sea level rated input of Gas Designed Appliances installed at elevations above 2000 (610 m) feet is to be reduced 4% for each 1000 feet (305 m) above sea level. Refer also to local authorities or codes which have jurisdiction in your area regarding the de-rate guidelines

    In Canada: When the appliance is installed at elevations above 4500 feet (1372 m), the certified high altitude rating shall be reduced at the rate of 4% for each additional 1000 feet (305 m).

17. MAKE SURE that the conversion label is installed on or close to the rating label to signify that the unit has been converted to a different fuel type.

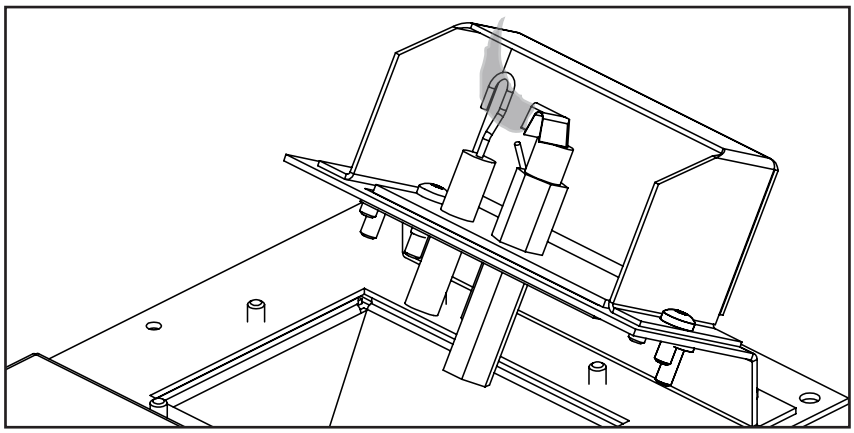

Figure 27: Flame Sensor Coverage

Initial Installation

QUALIFIED INSTALLERS ONLY

Introduction

This section of the owner's manual is for the use of qualified technicians only. Fireplace placement, hearths, facing, mantels, and venting terminations will be covered, as well as the gas and electric systems. There are several installation safety guidelines that must be adhered to. Please carefully read the safety precautions at the front of this manual.

- Remove the packaging from the appliance, and check to make sure there is no damage. If damage is found, please report it to both the carrier and your dealer as soon as possible.
- Locate a position where the flue system of the stove can be properly installed without damaging the integrity of the building; e.g. cutting a wall or ceiling joist.
- Check stove and flue system clearance requirements.
- Locate the stove in a postion so a gas supply line can be run to it.
- The fireplace may need an electrical connection depending on the options added.
- Locate the stove in a large and open room that is centrally located in the house. This will optimize heat circulation and comfort.
- The flow of combustion and ventilation air must not be obstructed.

Unit Install Preperation

Take a minute to familiarize yourself with Figure 28 below.

- The top framing standoffs will need to be folded up and secured on one side with a T-20 screw, This can be seen in Figure 28.
- The side framing standoffs for this unit also double as handles for positioning and lifting.
- The nailing flanges secure the unit to the framing, these can be turned 180 to to allow for a 1/2in shallower framing depth.

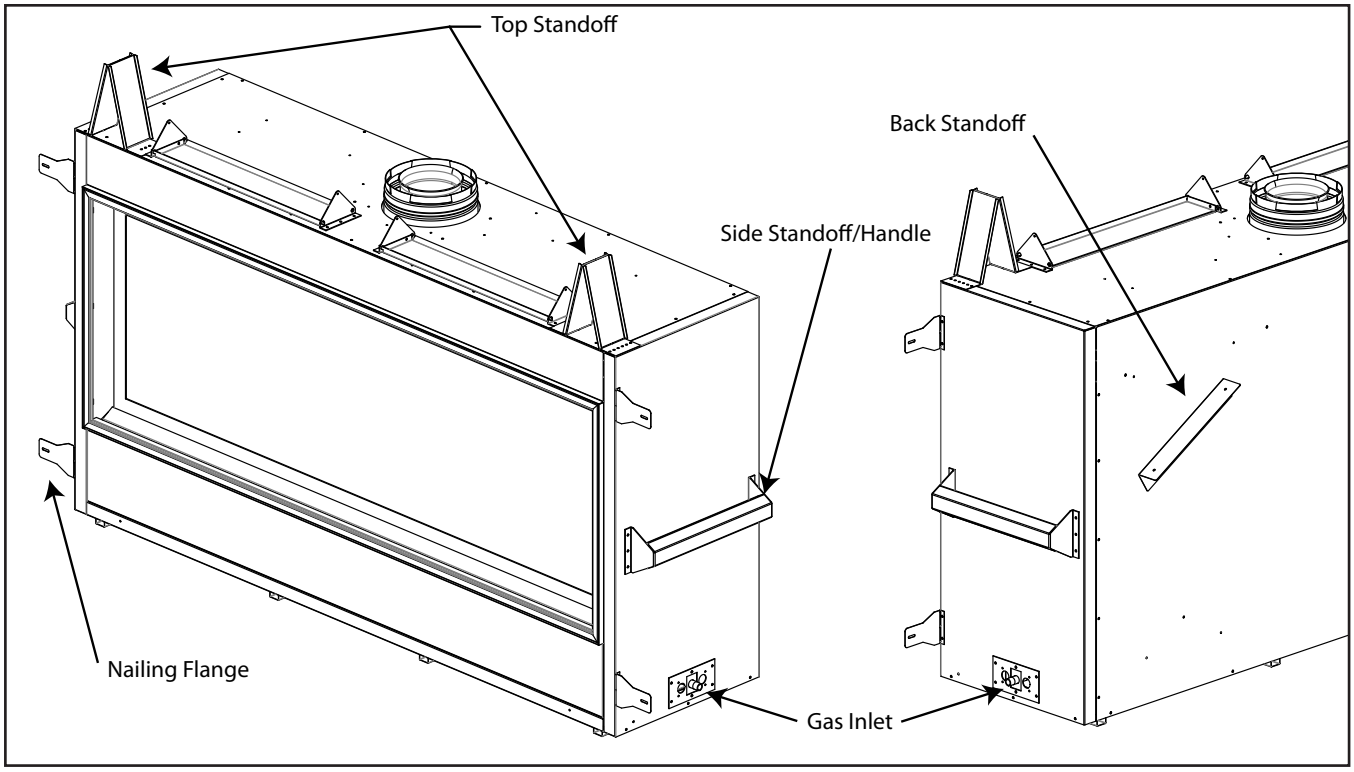

Figure 28: Fireplace Install Preperation

QUALIFIED INSTALLERS ONLY

Steel Stud

Framing of the fireplace requires a steel stud placed above the unit. The steel stud included with the fireplace comes in two pieces that combine to create a telescopic steel stud. This allows for horizontal adjustment to fit the specific length of your unit.

- Take the two steel stud pieces and slid them into each other. The flanges of each piece should be at the end of the assembly, as well as facing upwards as shown in Figure 29.
- Place the steel stud onto the top standoffs and slide outwards until both ends make contact with the framing studs (see Figure 30).

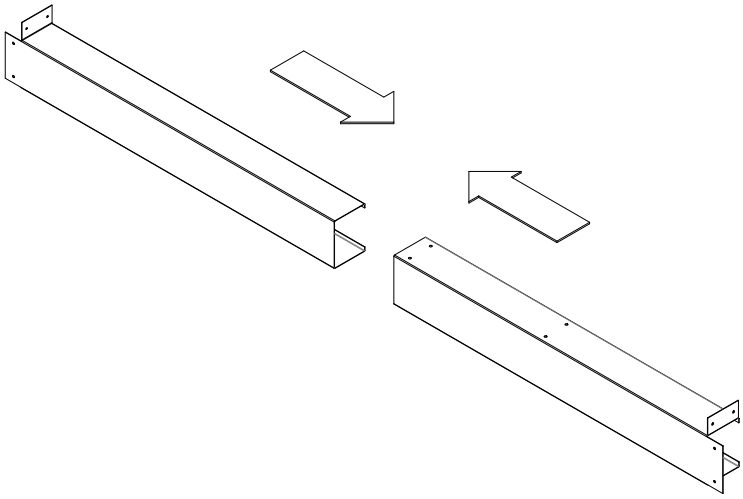

Figure 29: Steel Stud Assembly

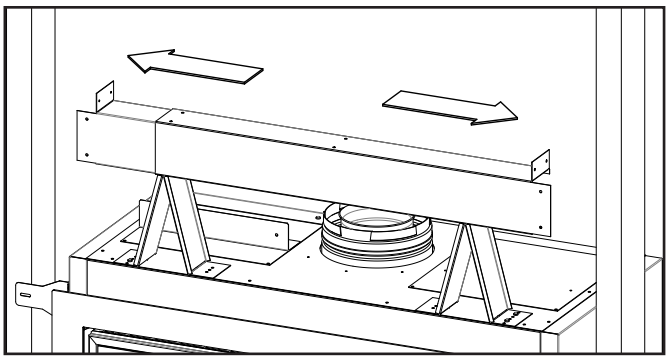

Figure 30: Steel Stud Placement

- Using the provided sheetmetal screws, attach the two steel stud pieces together using the labeled holes in Figure 31. This should be done on the top and bottom of the steel stud to ensure its rigidity.
- Attach the steel stud to the framing studs using the holes shown in Figure 32.

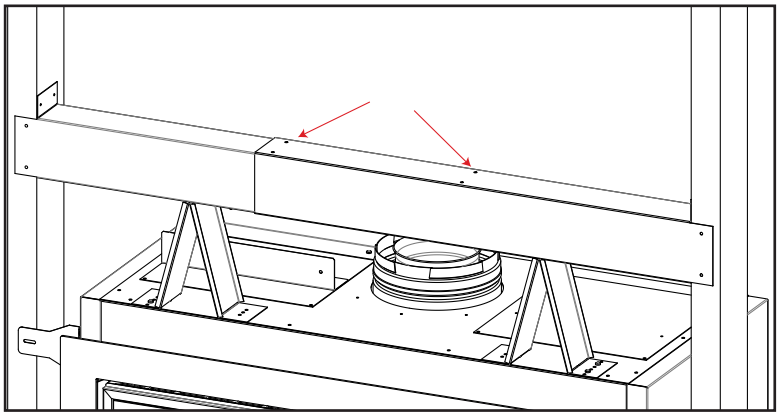

Figure 31: Steel Stud Attachment

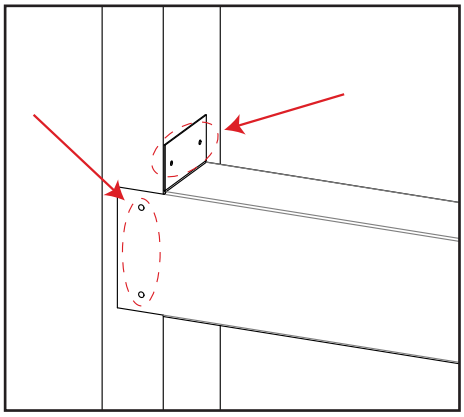

Figure 32: Steel Stud Installation

QUALIFIED INSTALLERS ONLY

Placement and Framing

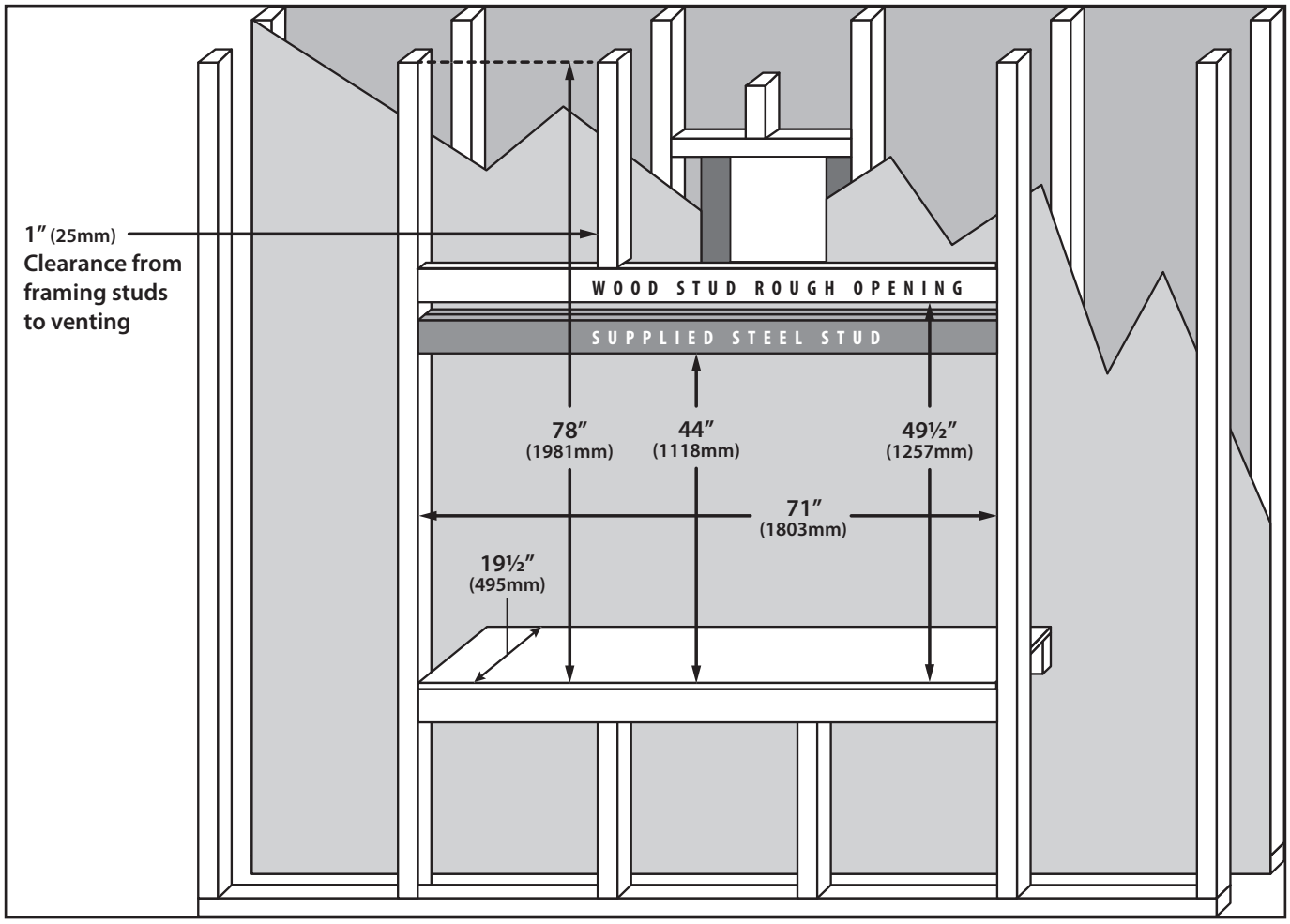

Figure 33: Construction Framing Dimensions

Table 2: Framing Dimensions.

Minimum Framing Dimensions		
Depth	19 ½"	495mm
Width	71"	1803mm
Header Height	44"	1118mm
Enclosure Ceiling	78"	1981mm

The location for the fireplace can be raised, at floor level, or installed in a corner. There are specific framing measurements for each situation. The basic rough opening should have the dimensions shown in Figure 33. The fireplace must have a strong and level surface to be placed on. The surface should be made of wood or another robust, non-combustible material.

The gas line should be run to the right side of the fireplace, there is a 3/8 Male NPT fitting to connect the gas line to. The electrical wiring should be brought to the left side if needed. The location of the fireplace should be chosen so there will be at least **36 inches (91.4 cm)** from drapes, doors and other combustibles.

QUALIFIED INSTALLERS ONLY

Cool Surface Activation

WARNING: IT IS ESSENTIAL THAT THE CHASE IS VENTED IN A MANNER THAT RELIEVES THE ADDITIONAL HEAT ENTERING THE CHASE. ENSURE ONE OF THE AVAILABLE FRAMING OPTIONS HAVE BEEN CONSTRUCTED IN ACCORDANCE WITH THIS MANUAL. FAILURE TO DO SO CAN CREATE AN OVERHEATING SITUATION THAT COULD LEAD TO BUILDING FIRE.

Ensure your chase has been constructed in a manner that vents the chase into the same room. It is not permitted to vent the chase into an adjoining room. The CSS bleeds heat off the appliance into the chase as opposed to climbing up the front face. This dramatically lowers the front wall temperatures allowing the placement of delicate objects above the appliance. Review the guidelines in the previous sections to ensure your install is in accordance with the framing specifications. Follow these instructions to activate the CSS feature.

1. Remove the safety screen (see section “Safety Screen” on page 16).
2. Remove the top discharge accelerator from above the door glass. Simply lift up to disengage from the slotted screws. Replace it with the CSS Bolt Cover that is included with your unit.
3. There is a CSS cover on the inner top of the cabinet that must be removed. It is attached using seven (7) #8 T20 screw. Remove these screws and remove the cover (see Figure 34).
4. On the top of the unit you will find two hinge assemblies that must be opened. Remove the #8 T20 screws found preattached on the hinge brackets.
5. Rotate the CSS Flaps up so the prepunched holes align where the screws from the previous step were removed. Reattach the screws to hold the plates in place (see Figure 35).
6. The CSS is now activated. Reattach the safety screen and proceed with installation.

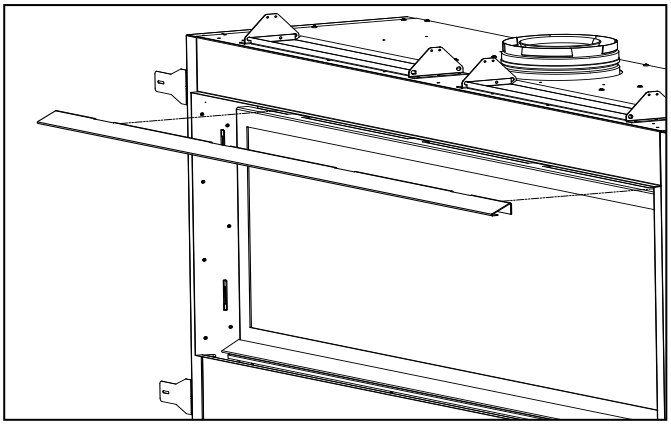

Figure 34: CSS Bolt Cover

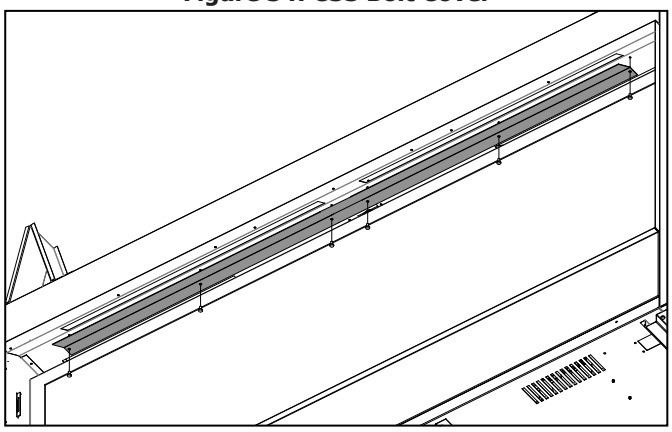

Figure 35: CSS Cover Removal

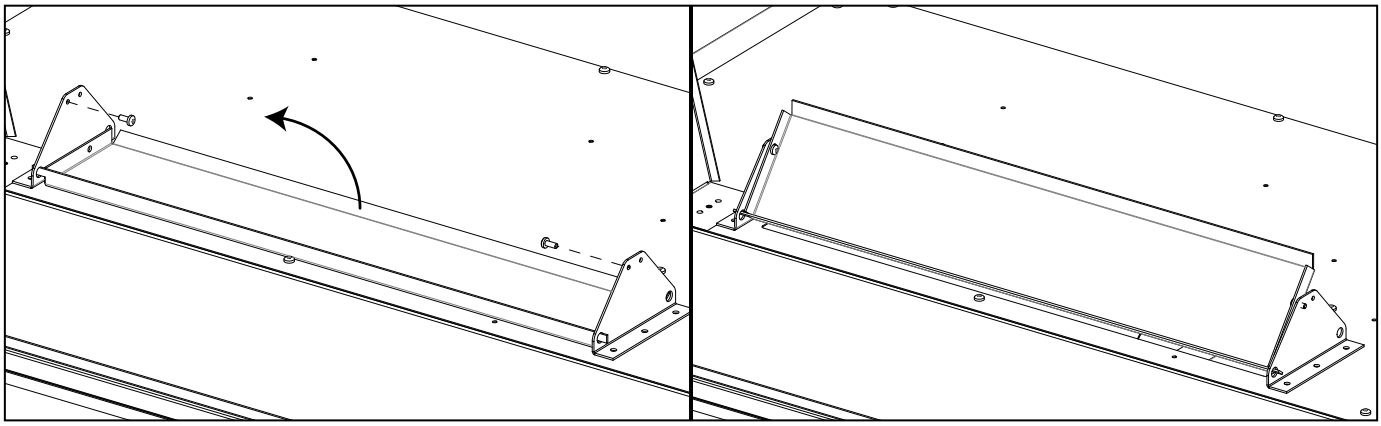

Figure 36: CSS Flap

QUALIFIED INSTALLERS ONLY

Cool Surface Framing

This appliance is manufactured with a built-in heat distribution kit, referred to as the Cool Surface System (CSS). The purpose of the CSS is to dramatically reduce the front wall temperatures above your appliance. This is very useful when delicate objects such as a TV or artwork are mounted above the unit. Using this feature will also allow you to use combustible facing materials right up to the finishing edge. It is extremely important these instructions are followed meticulously. If not installed correctly this could be very dangerous and could lead to building fire. If the CSS is activated it is crucial that the chase is vented in accordance to this manual.

When the CSS is activated, it is not longer required to install a non-combustible board above the stove. The CSS also reduces the minimum height of when installing mantels (see section “Mantel Requirements” on page 28). For CSS activation instructions, refer to section “Cool Surface Activation” on page 24.

Construct the framing in a way that provides a minimum 57 inch (1448mm) by 3 inch (76mm) gap at the top of the facing wall. This gap can be a maximum of 3.5 inch (89mm) from the top of the chase and can go all the way to the top of the chase if desired. It is essential that these dimensions are respected and not to deviate away from them when using combustible materials inside the chase (see Figure 36).

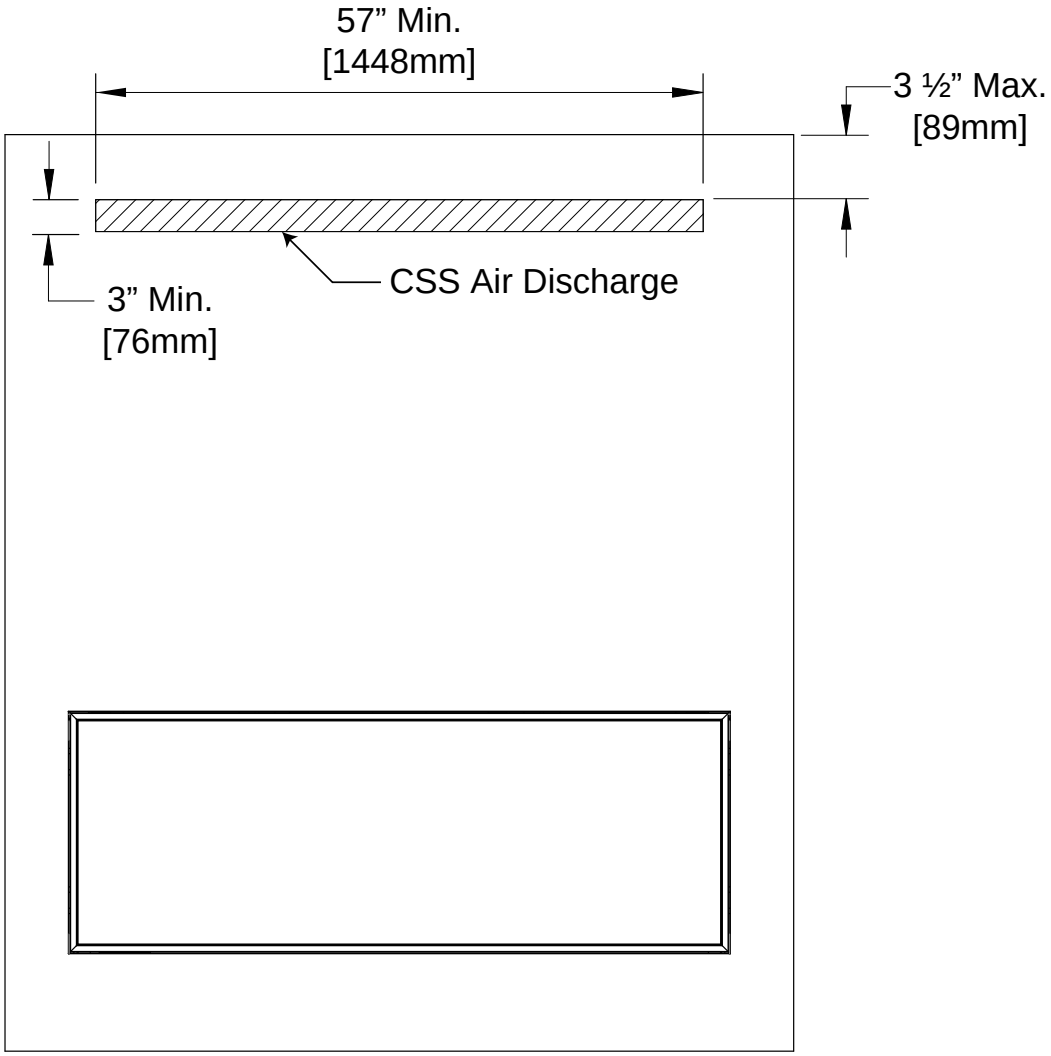

Figure 37: CSS Front Discharge

QUALIFIED INSTALLERS ONLY

The framing can also be constructed in a way that provides two side vents as shown in Figure 37. The size of the side vents must provide a minimum area equal to the area provided by the front CSS discharge in Figure 36 (i.e. 3in x 57in = 171 in^2).

For example: If you want a side vent with a height of 3.5", the minimum width of each side vent would be:

2 x (Height x Width) = 171 in^2

2 x (3.5in x Width) = 171 in^2

Width = 24.429 in ≈ 24.5 in

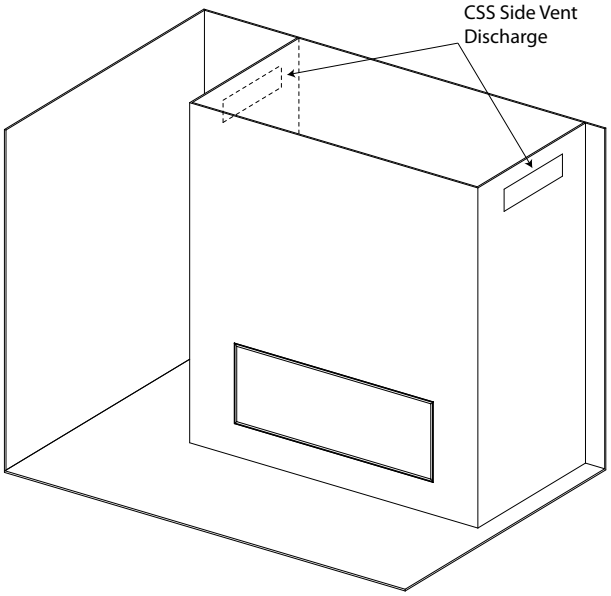

Figure 38: CSS Side Discharge

Alternate Gas Inlet Location

The gas inlet location can be moved to the bottom of the cabinet if needed. This may be needed for certain installations. First, remove the two screws on the left side of the unit (see Figure 39). The gas inlet assembly will now be loose in the cabinet. Disconnect the gas line coming from the gas valve, the straight fitting the gas line was connected too will be r`eaplaced by a elbow supplied in the manual bag. Thread the elbow into the shut off valve, use gas sealant on threads. Mount the assembly to bottom of the firebox as shown, screws come installed in firebox. Reconnect the gas line to elbow.

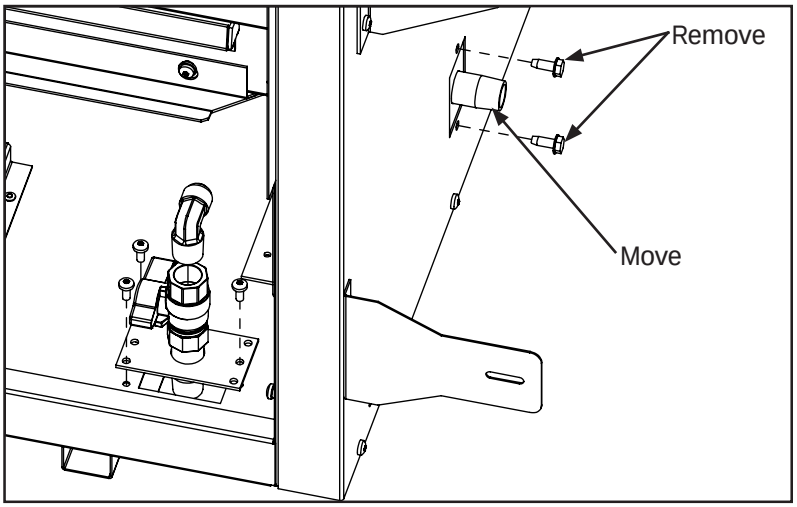

Figure 39: Alternate Gas Inlet Location

Floor Protection

The C60I-T may be installed on a combustible floor. **If the appliance is to be installed directly on carpeting, tile, or any other combustible material other than wood, the appliance must be installed on a metal or wood panel extending the full width and depth of the appliance.**

If masonry is to be used, prepare the necessary foundation for the masonry load. When masonry construction is being used, a lintel must be used over top of fireplace to support the added weight.

Consider the height of hearth finish material (stone, brick, etc.) when building a fireplace platform. The bottom of the fireplace must be level with finished hearth.

Build the hearth to desired size and height. If a hearth extension is desired, combustible material may be used.

Above floor level installations: A solid, continuous platform must be constructed below the appliance. MINIMUM PLATFORM SIZE: 71 in. (1803 mm) wide x 19.5 in. (495 mm) deep.

QUALIFIED INSTALLERS ONLY

Vent Termination Framing

Minimum venting is shown in Figure 40. the framing height to the center of the thimble is 68". Minimum venting must include a 24" vertical section and a 90 degree elbow which is then terminated horizontally.

For a vertical termination please follow the vent pipe manufacturer's installation instructions for vertical vent termination framing.

A minimum of 1" (25 mm) clearance on all sides of the vertical vent pipe must be maintained.

For every 12" of horizontal run there must be a 1/4" of rise.

1" of clearance between framing and venting must be maintained at all times. 2" above horizontal venting. 6" above first elbow and 3" above subsequent elbows.

Please see vent cap clearance in page 37. Also refer to local building and fire codes.

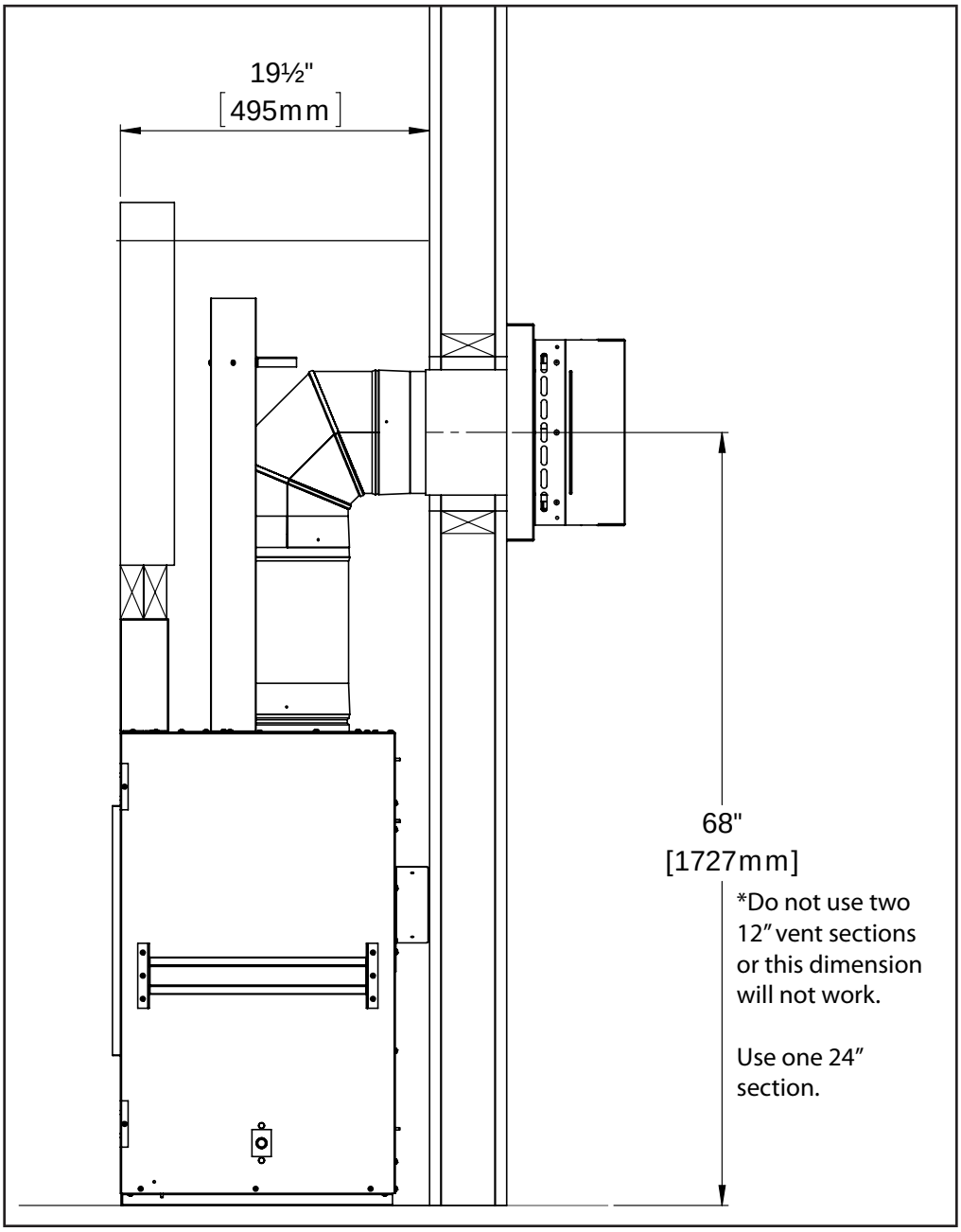

Figure 40: Minimum Horizontal Venting

QUALIFIED INSTALLERS ONLY

Mantel Requirements

Refer to Figure 41 & Figure 42 for a combustible mantel installation, measurement is from bottom of the unit to the bottom of the mantel. The mantel height is drastically reduced when the CSS is activated. Refer to Figure 42 if the CSS is activated.

If you are planning on installing a TV above the fireplace refer to page 36 to see the options available.

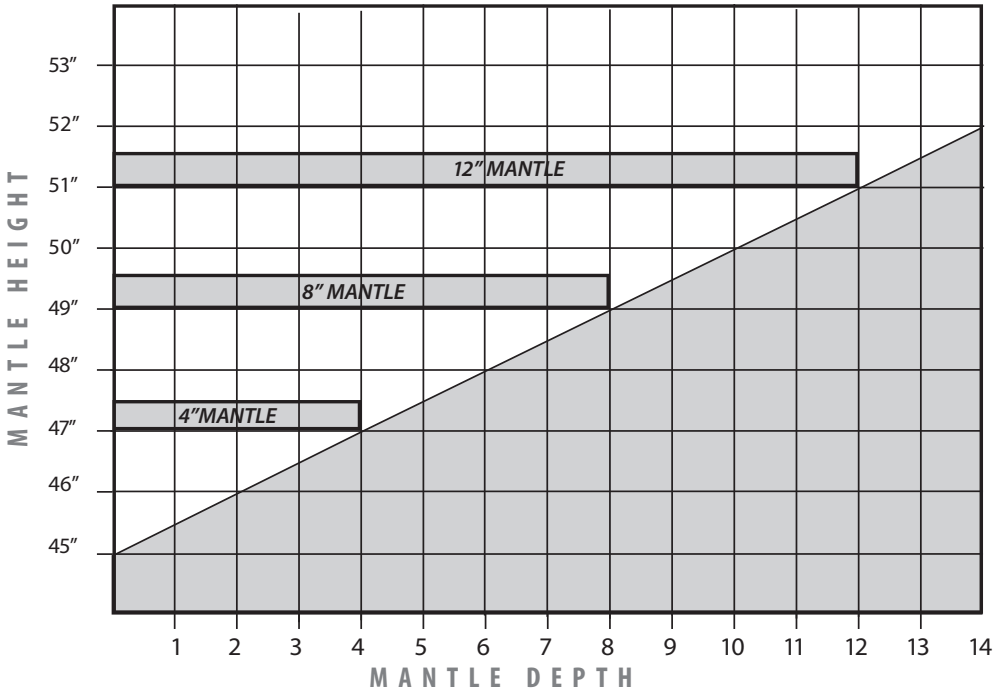

Figure 41: Minimum Mantel Height

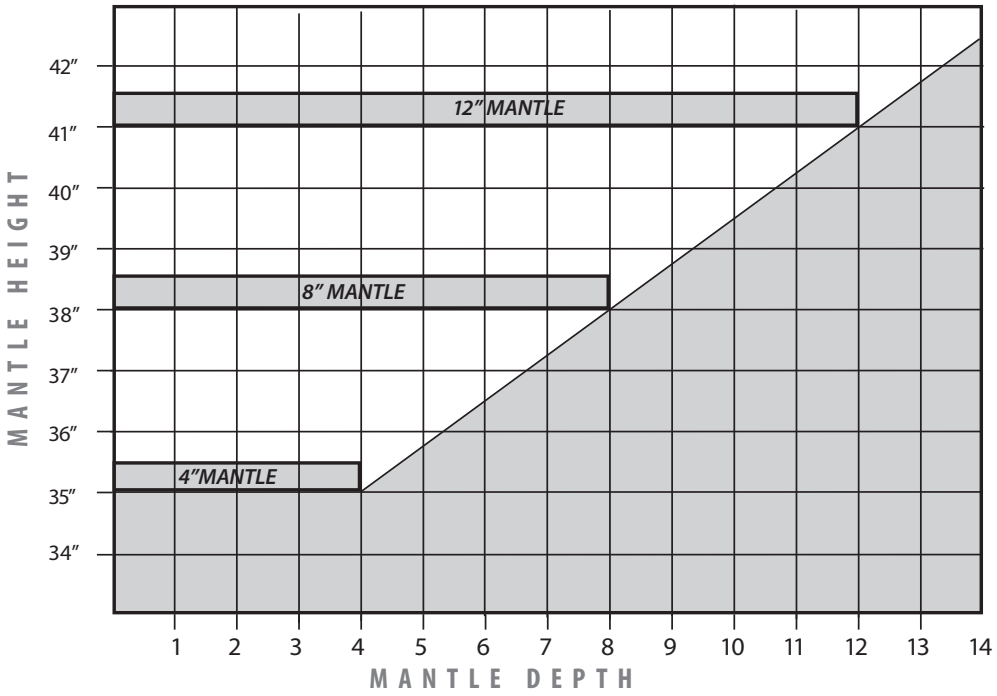

Figure 42: Minimum Mantel Height - CSS Activated

QUALIFIED INSTALLERS ONLY

If adding a mantel to the C60I-T please note the critical dimensions shown in Figure 43. These are minimum dimensions as per certification and must be followed.

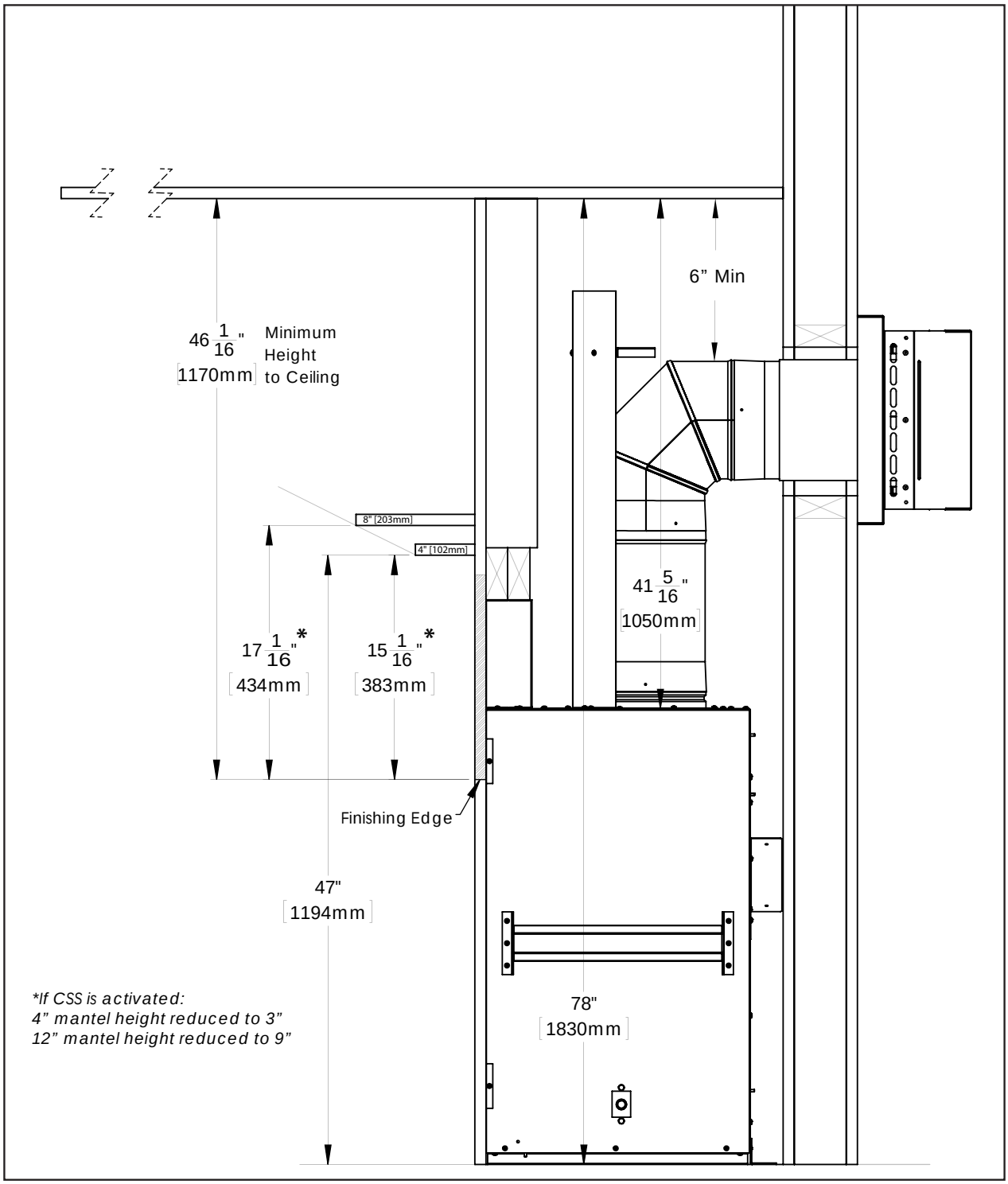

Figure 43: Install Dimensions with Mantel

QUALIFIED INSTALLERS ONLY

Installation with Recess

Refer to dimensions in Figure 44 if building a recess above the fireplace. Note the dimensions from the finishing edge to the stud below the recess finishing material. The vertical finishing material at the back of the recess must be be spaced 7/8″ off the vent shield. Also note the dimension from the vent pipe to the internal ceiling this must be maitainted if the fireplace is raised.

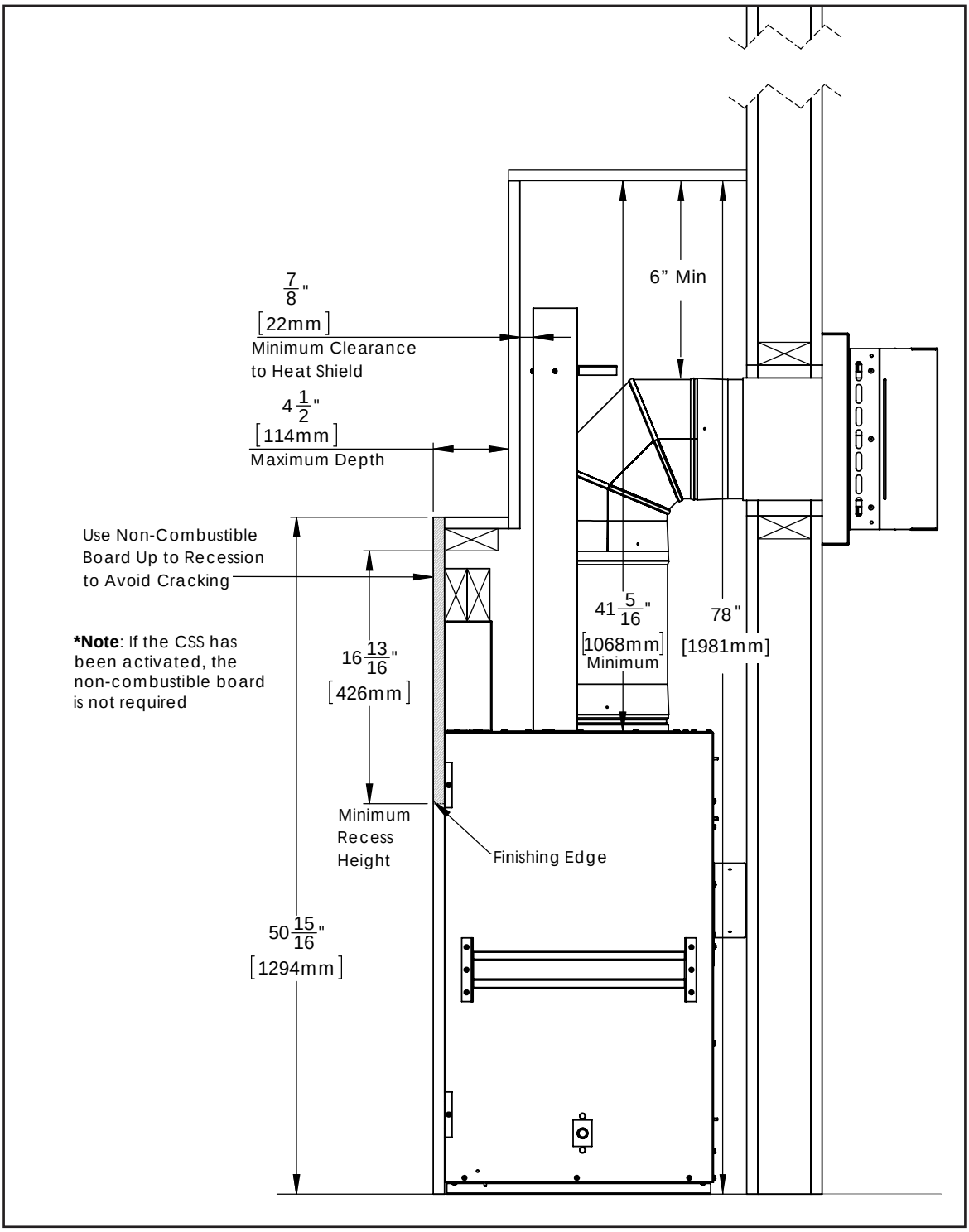

Figure 44: Install Dimensions with Recess

QUALIFIED INSTALLERS ONLY

Corner Installation

The dimensions for installing a fireplace in the corner of a room are given in Figure 45. Refer to "Installation - Allowable Co-axial Vent Configurations" for allowable pipe lengths.

Do not interfere with the structural integrity of the walls. Shown below are minimum clearances; increasing these dimensions is allowable as long as vent length remains in the allowable range. See vent graph for details.

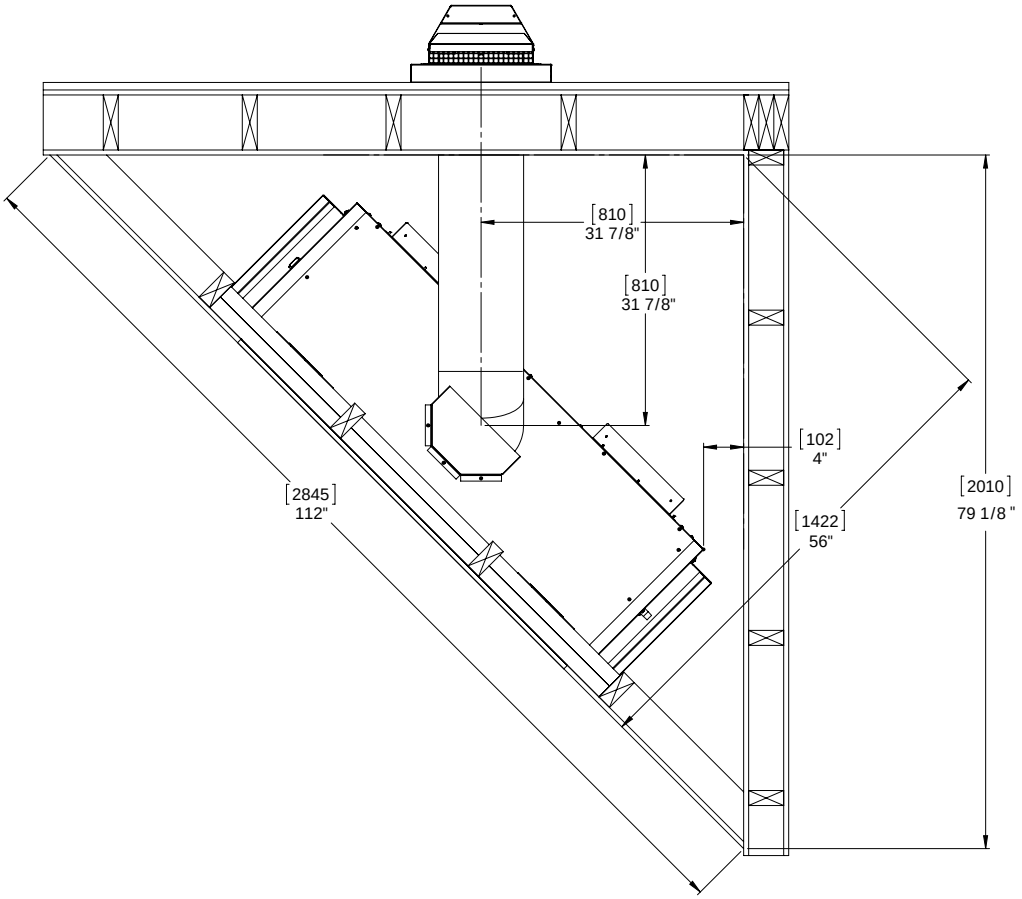

Figure 45: Dimensions for a Corner Installation

IMPORTANT: All installations must include the vertical vent shield. The horizontal vent shield is only installed if the fireplace is horizontally terminated with the minumum vertical rise of 24". If more than 24" of vertical rise is used in the vent configuration no horizonal shield is needed. See Figure 46 for shield install. Screws are pre-installed in cabinet and horizontal vent shield. Use a T-20 screwdriver or drill driver to remove screws then install shields.

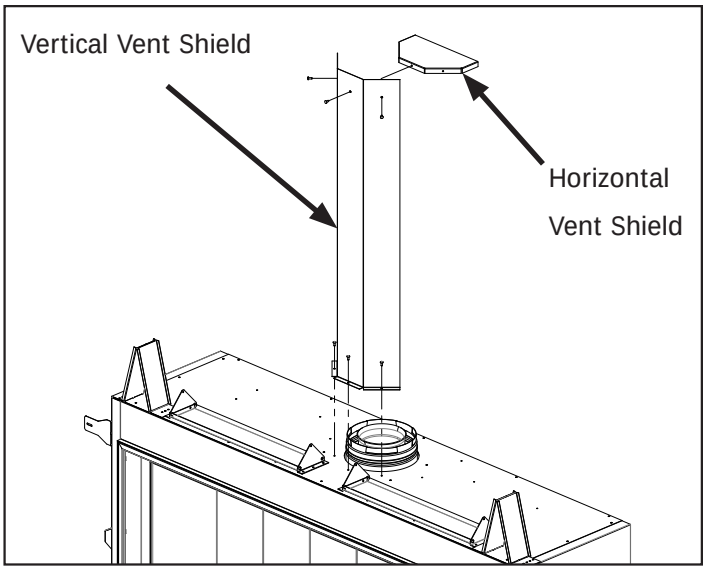

Figure 46: Vent Shielding Install

QUALIFIED INSTALLERS ONLY

Horizontal Vent install

Figure 47 shows a horizontal vent installation with minimum clearances. The horizontal vent shield must be used when the minimum vent configuration is used. If more than 24″ of vertical rise is used the shield should not be installed. The vent to ceiling clearance must be maintained no matter the additional vertical vent height; see Figure 41 and Figure 42. A minimum of 1″ clearance on all sides of the vent pipe must be maintained at all time unless specifically stated.

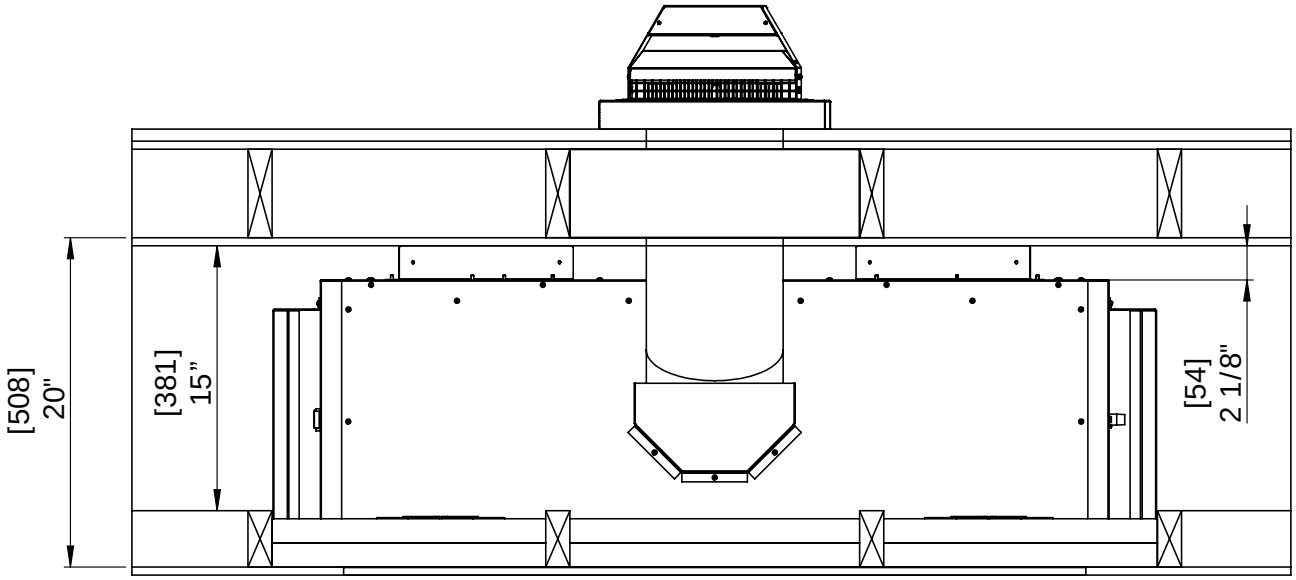

Figure 47: Dimensions for a Horizontal Installation

Vertical Vent install

Figure 48 shows a vertical vent installation with minimum install clearances. Vertical vent shield is needed, the horizontal vent shield is not required for vertical vent configurations. A minimum of 1″ clearance on all sides of the vertical vent pipe must be maintained at all time unless specifically stated. Please see Initial Installation - Vertical Termination for further details.

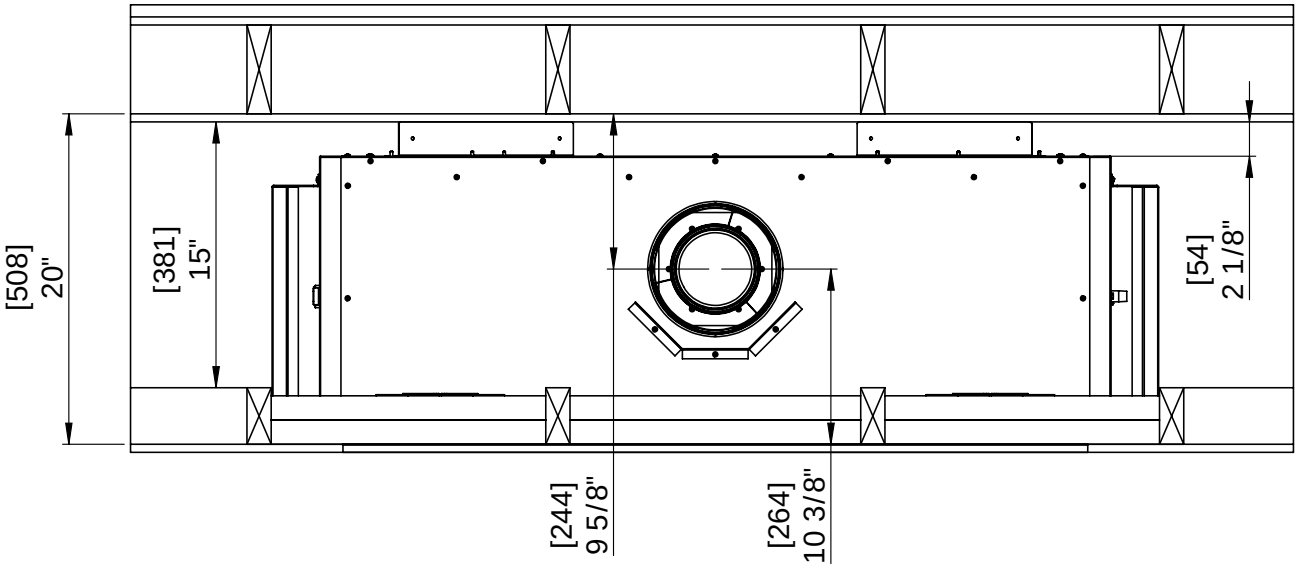

Figure 48: Dimensions for a Vertical Installation

QUALIFIED INSTALLERS ONLY

Outdoor Install

All Enviro C-Series fireplaces may be installed in a covered outdoor area when following the requirements stated below:

- Fireplace must be installed in a weather proof enclosure while still following all clearance to combustible materials as outlined in the fireplace's manual.
- The fireplace cannot serve as part of the building's insulation or weatherproofing barrier. The building must be properly insulated and sealed from the outside prior to installation of the fireplace.

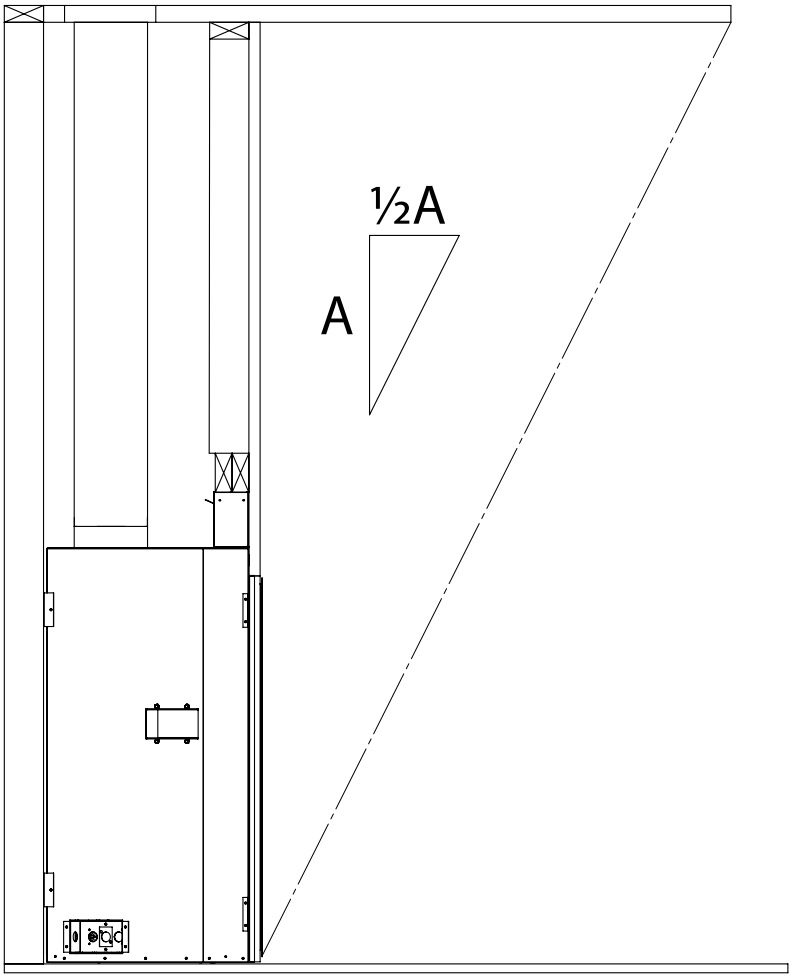

Figure 49: Overhang Depth Requirements

- The fireplace must be protected by an overhang with a depth that is at least equal to half of its height from the base of the fireplace, as shown in Figure 49.

Example - If the overhang height = 8ft (2.4m) then the required overhang depth must be at least 4ft (1.2m)

- The width of the covered overhang on each side of the fireplace must also be at least equal to half of its height

Example - If the overhang height = 8ft (2.4m) then the overhang must extend at least 4ft (1.2m) past each side of the fireplace opening

- Fireplace may only utilize the Cool Surface System (CSS), or any variant of it, when the covered overhang is flat with no pitch in front or to the side of the fireplace.
- For models equipped with remote control, neither "Smart Mode" nor Thermostat is permitted for use as this could lead to unintended continuous operation of the fireplace.
- Plated finish surround panels are not permitted for outdoor installation due to the high potential for oxidation to form on the surface.

- Any outdoor furnishings must be kept a minimum of 3ft (0.9m) away from the front of the fireplace.
- Electrical and gas connections must follow applicable codes and standards pertaining to outdoor installations.
- Horizontal termination caps must not discharge into the same space shared by the front of the fireplace. Vertical termination caps are recommended.

QUALIFIED INSTALLERS ONLY

Flex Venting

This fireplace is certified to work with aluminium co-axial flex venting. Flex venting can be used in the same configurations as rigid pipe, see venting diagram for details. Flex venting is only to be used for the run, it must be adapted to rigid piping for exterior wall penetration and termination. **Note: Adhere to all rigid venting safety measures and clearances.**

Use 5X8 Flex Adapter Kit [50-3789]: This kit will allow you to adapt co-axial flex to the fireplace, make your vent run, then adapt back to rigid venting **(flex not included)**.

Any 5X8 CSA or UL flue gas certified aluminum or stainless steel flex is acceptable. Proper spacers must be used to keep pipes from contacting each other. Proper venting spacers must be used, nothing makeshift. Examples of allowable flex pipe brands include, but are not limited to, the following:

- M&G Duravent
- Selkirk Corp
- ICC
- Z-Flex
- Flexmaster
- Chim Flex
- Olympia
- BDM
- Metal-Fab

Only the flex venting and spacers are needed. You must use the flex adapter kit and a certified rigid pipe termination cap.

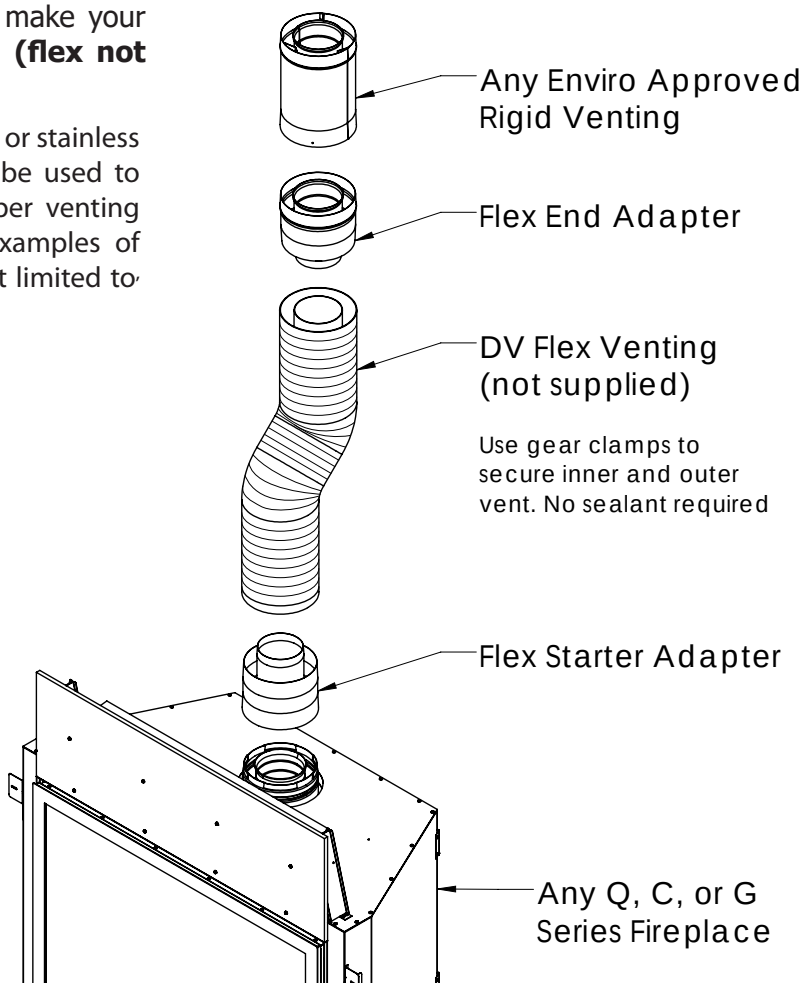

Figure 50: Flex Adapter Kit Install

INSTALLATION NOTES:

- Do not bend flex vent over 90 degrees.
- All horizontal runs should have a minimum 1/4” (6mm) rise per foot for optimal performance.
- Do not allow the inner flex pipe to contact the outer pipe, keep it pulled tight and use spacer springs.
- Spacers are required at the start, middle, and end of each elbow to ensure gap is maintained.
- Do not add any extensions to the preset kits, if more length is required, use rigid pipe.
- No need for liquid sealant; secure flex venting with aluminum vent tape and apply sufficient self-tapping screws.

QUALIFIED INSTALLERS ONLY

Clearances & Non-Combustible

When installing the C60I-T as a zero clearance fireplace the correct clearances and materials must be used:

Above Unit: A minimum **13 3/4" (350mm)** of non-combustible facing material must be used above the firebox opening. If the CSS is activated (see section "Cool Surface Activation" on page 24), this non-combustible material is not required.

In Front of Unit: The C60I-T can be placed on a combustible floor if desired. The unit cannot sit directly on combustible flooring other than wood.

Adjacent/Sidewall: A minimum of **5 3/16" (132mm)** of non-combustible facing materials must be used of the side of the firebox opening above the bottom edge openeing. There must be a minimum distance of **7" (229mm)** from the finishing edge of the C60I-T to an adjacent wall composed of combustible material.

Mantle: It is not necessary to install a mantle, but if one is desired the guidelines as shown in Figure 41. The minimum clearance from the side of a mantle to wall is 4".

Floor: There must be a minimum distance of **10" (254mm)** from the bottom finishing edge of the C60I-T to a floor composed of combustible material.

> **Cracking:** The most common area of cracking is along the horizontal cement board/drywall transition; placing this transition further away from the heat will help prevent cracks. If you have concerns of excessive finishing wall temperature follow one of these options to minimize the possibility of cracking:
>
> 1. Install concrete board higher than the minimum specified dimension.
> 2. Add a decorative tile trim over the drywall transition area.

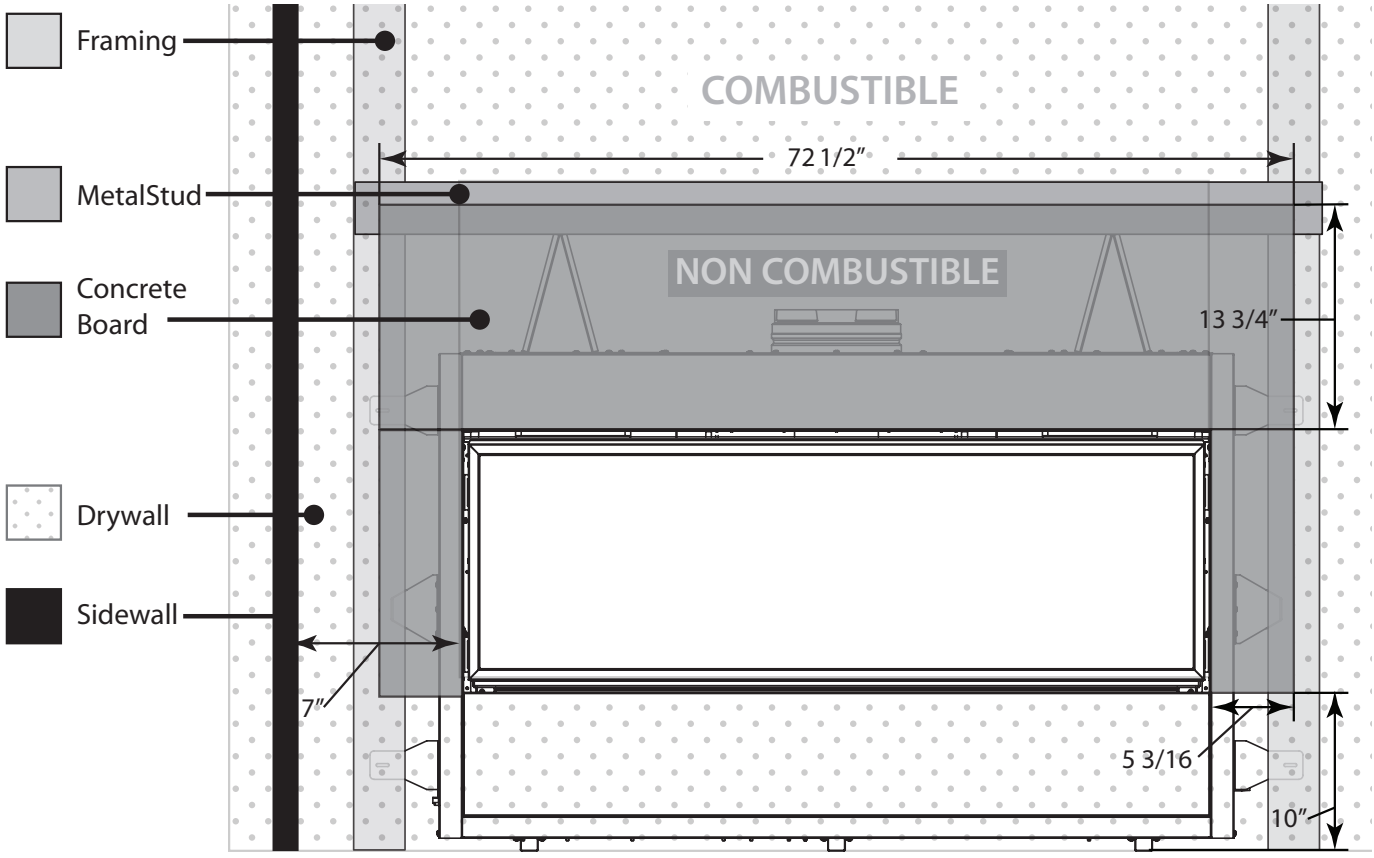

Figure 51: Finishing Non-Combustible Zone

QUALIFIED INSTALLERS ONLY

TV Installation Considerations

If you are planning to mount a TV above your fireplace some considerations must be made to ensure it is protected from the heat. A recess, mantel, Cool Surface System activation(see page 24), or a combination of all three is needed in order to keep the heat away from the TV.

During testing temperatures did not exceed 150°F (65°C) in a 5" deep recess. There is no guarantee that these temperatures will not harm the longevity of your TV. Make sure to consult your TV manufacture's specifications to find the maximum allowable operating temperature. Since every home and installation is unique, temperatures should be verified at the time of install if possible. A TV should not be installed if temperatures exceed the manufacturers maximum allowable temperature.

See Figure 52, 53, and 54 for minimum TV installation clearances. Make sure there is 2" of clearance around the sides and top of the TV to allow for airflow. Remember these are **minimum** dimensions increasing them can only help reduce the temperature the TV is subjected too.

If installing with a mantel to protect the TV please see Figure 52 for clearances, it is highly recommended to use at least a 8" mantel. The **minimum** distance from the base of the unit to the bottom of the TV would be 49.5".

If a recessed installation is desired please see Figure 53 for TV clearances. The recess will need to protrude from the wall for proper protection, this dimension is dependant on the TV and TV mounting bracket depth. The **minimum** distance from the base of the unit to the bottom of the TV would be 53.00".

If only using the Cool Surface System to protect the TV please see Figure 54 for clearances. The **minimum** distance from the base of the unit to the bottom of the TV would be 44".

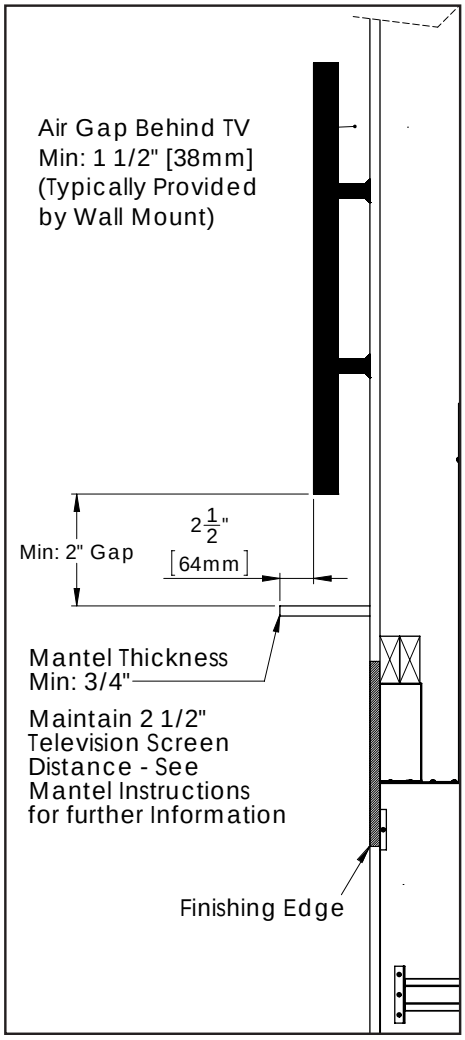

Figure 52: Mantel Minimum TV Install Clearances

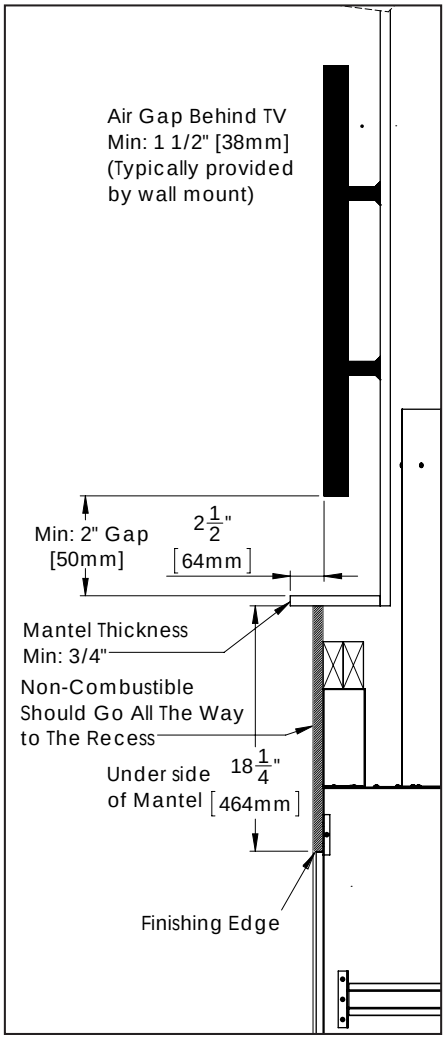

Figure 53: Recess Minimum TV Install Clearances

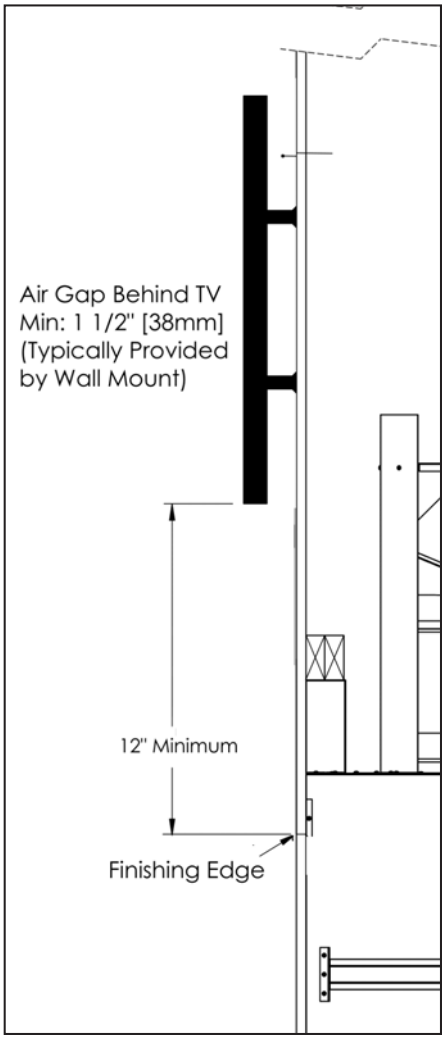

Figure 54: Cool Surface System Minimum TV Install Clearances

QUALIFIED INSTALLERS ONLY

Direct Vent

WARNING: This appliance has been designed to draw room air and discharge heated air from the openings around the finishing edge. Blocking or modifying these openings in any way can create hazardous situations. Only Approved Direct Vent may be used for installation of the C60I-T.

The minimum vent installation for the C60I-T must include a **24" vertical section and 90° elbow before being horizontally vented. Maximum vertical venting is 40′ (12.2 m).** This model is vented with co-axial **5"** exhaust, **8"** intake aluminum or stainless steel approved rigid vent leading into a vertical or horizontal termination cap. The flue collar of this model will fit inside of a standard **5"**x **8"** vent and must be either correctly interlocked or fastened, with three screws directly to the vent collar.

Check periodically that the vents are unrestricted. Also ensure that all direct vent pipes have been properly sealed and installed after routine inspection or cleaning. The air intake and exhaust pipes must be installed in the correct locations on the top of the C60I-T.

Vent Termination Restrictions

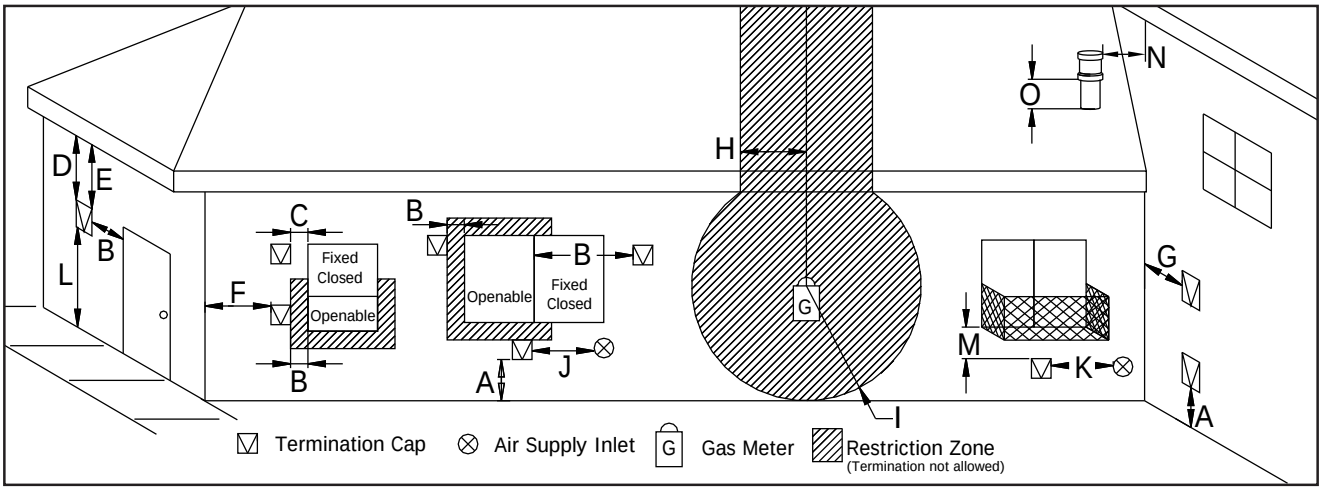

Figure 55: Vent Termination Restrictions, refer to Table 3

Table 3: Vent Termination Clearances

Letter	Canadian Installation [1]	US Installation[2]	Description
A	12 in (30 cm)		Clearance above grade, verandah, porch, deck, or balcony.
B	12 in (30 cm)	9 in (23 cm)	Clearance from window or door that may be opened.
C	12 in (30 cm)*		Clearance from permanently closed window (to prevent condensation).
D	24 in (60 cm)*		Vertical clearance to ventilated soffit located above the terminal, within a horizontal distance of 2 ft (60 cm) from center line of terminal.
E	18 in (45 cm)*		Clearance to unventilated soffit.
F	12 in (30 cm)*		Clearance to outside corner.
G	12 in (30 cm)*		Clearance to inside corner.
H	3 ft (91 cm) within a height of 15 ft (4.5 m) above the meter/regulator assembly	3 ft (91 cm) within a height of 15 ft (4.5 m) above the meter/regulator assembly*	Clearance to each side of center line extended above meter/regulator assembly.
I	3 ft (91 cm)	3 ft (91 cm)*	Radial clearance around service regulator vent outlet.

QUALIFIED INSTALLERS ONLY

J	12 in (30 cm)	9 in (23 cm)	Clearance to non-mechanical air supply inlet to building, or the combustion air inlet to any other appliance.
K	6 ft (1.83 m)	3 ft (91 cm) above if within 10 ft (3 m) horizontally	Clearance to mechanical air supply inlet.
L	7 ft (2.13 m)[t]	7 ft (2.13 m)*[t]	Clearance above paved sidewalk or paved driveway located on public property.
M	12 in / 30 cm[+]	12 in / 30 cm*[+]	Clearance under verandah, porch, deck, or balcony.
N	12 in (30 cm)*		Clearance horizontally to any surface (such as an exterior wall) for vertical terminations.
O	12 in (30 cm)		Clearance above roof line for vertical terminations.

[1] In accordance with the current CSA B149.1, Natural Gas and Propane Installation Code.
[2] In accordance with the current ANSI Z223.1 NFPA 54, National Fuel Gas Code.
* These numbers are only estimates.
[t] A vent shall not terminate directly above a side walk or paved driveway that is located between two single family dwellings and it serves both dwellings.
[+] Permitted only if verandah, porch, deck, or balcony is fully open on a minimum of two sides beneath the floor.

Clearances are in accordance with local installation codes and the requirements of the gas supplier.

NOTE: Venting terminals shall not be recessed into walls or siding.

VENTING CLEARANCES

A **1" (25 mm)** clearance to combustibles must be maintained around any vertical vent pipe. Around a horizontal vent pipe, the clearance to combustibles should be **2" (51 mm)** above and **1" (25 mm)** on the sides and bottom. When combustible materials are directly above the first 90° elbow, **6" (152.2 mm)** of clearance is necessary.

Table 4: Vent Pipe Minimum Clearances

	Vertical Pipe to the Side Walls	Horizontal Pipe to the Sides & Bottom	Above First Elbow	Above Subsequent Elbows	Above Horizontal Vent Pipe	Wall Frame 8" (203mm) or less
Hard Pipe	1" (25.4 mm)	1" (25.4 mm)	6" (152.2 mm)	3" (76.2 mm)	2" (51 mm)	Thimble Specific

See certified thimbles in venting section and frame accordingly (see Table 6) will assure the proper support and spacing for the vent pipe as it passes through the wall. Installations in Canada require that a wall thimble be used for passing through walls and ceilings. All sealing and vapour barriers must comply with local building codes.

The configuration of the venting pipes depends on the locations of walls, ceilings, and studs. However, the pipes cannot be of arbitrary length and arrangement. Because the length of the vertical and horizontal sections dramatically affects the burning efficiency of the fireplace, certain guidelines have been set in INITIAL INSTALLATION - ALLOWABLE CO-AXIAL VENT CONFIGURATIONS. Venting terminals can not be recessed into a wall or siding.

WARNING: This gas appliance must not be connected to a chimney flue serving a separate solid-burning appliances.

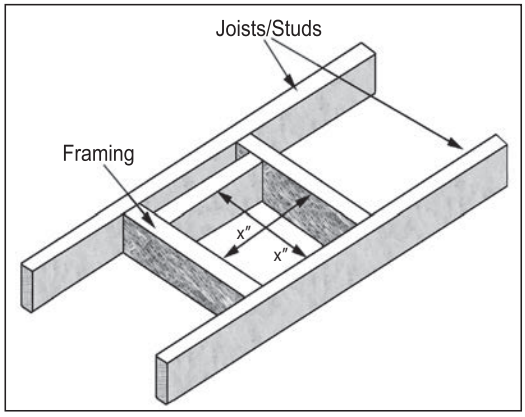

Figure 56: Vent Framing For Wall or Ceiling

QUALIFIED INSTALLERS ONLY

Approved Venting Parts

This fireplace has been tested and certified for use with the venting brand names liste above in Table 5. Refer to Table 6 below for part numbers of commonly used parts for both venting systems. For more venting parts please visit the respective manufacturers' website.

WARNING: Do not mix parts from different vent manufacturers' systems.

Table 5: Approved Vent Manufacturers

Manufacturer	Brand Name	Nominal Sizes
ICC	EXCELDirect	5" x 8"
M&G Dura-Vent	Direct Vent Pro	5" x 8"
Selkirk	DIRECT-TEMP	5" x 8"
Selkirk	AMP DV	5" x 8"
Metal-Fab Inc.	Sure-Seal	5" x 8"

EXCEPTION TO WARNING: This product has been evaluated by Intertek for using a DirectVent Pro starting collar in conjunction with venting brand names listed in Table 6. Use of these systems with the DirectVent Pro starting collar is deemed acceptable and does not affect the Intertek listing of the appliance.

Table 6: Vent Part Numbers (must state if galvanized or black wanted)

M&G Duravent Direct Vent Pro	ICC EXCELDirect	Selkirk DIRECT-TEMP	Amerivent AMV DV	Metal-Fab Sure-Seal DV	Description
58DVA-06	5DL6	5DT-06		5D6	6" pipe length
			5D7		7" pipe length
58DVA-09	5DL9	5DT-09			9" pipe length
58DVA-12	5DL1	5DT-12	5D12	5D12	12" pipe length
58DVA-18		5DT-18		5D18	18" pipe length
58DVA-24	5DL2	5DT-24	5D2	5D24	24" pipe length
58DVA-36	5DL3	5DT-36	5D3	5D36	36" pipe length
58DVA-48	5DL4	5DT-48	5D4	5D48	48" pipe length
58DVA-60					60" pipe length
58DVA-E30					30° elbow
58DVA-E45	5DE45	5DT-EL45	5D45L	5D45L	45° elbow
58DVA-E90	5DE90	5DT-EL90	5D90L	5D90A, 5D90L	90° elbow
58DVA-VSS, DVA-BVS	VSS	5DT-VS/VSK	5DHVS, DVSK	5DVS	Vinyl siding standoff/sheild
58DVA-WT3, 58DVA-WTU3	5WT	5DT-WT	5DWT	5DWT, 5DWT11	Wall thimble
58DVA-SC	SQSC, SC	5DT-SC	5DSC	5DSC	Storm collar
58DVA-WFS		5DT-FS		5DFSH	Wall Fire stop
58DVA-FS	5CS	5DT-FS	5DFSP	5DFS, 5DSPFS	Ceiling Fire stop
58DVA-IS	5AS	5DT-AIS	5DAIS12, AIS36	5DIS	Attic Insulation Shield
58DVA-WS	5WS	5DT-WS/B	5DWS	5DWS	Wall strap/support/band
58DVA-VCH	5SVT			5DVT	High wind vertical termination
58DVA-HC	5HT	5DT-HC	5DHCS	5DHT	High wind horizontal termination
46DVA-WG	HTS		4DHWS	8DVTS	Wind / Heat Shield
				5DAL	3" to 10" pipe, adjustable
58DVA-17TA					11" to 17" pipe, adjustable
58DVA-24TA					17" to 24" pipe, adjustable
	5DLA30				16.5" to 29" pipe , adjustable
	5DLS1				1 7/8" to 9" slip length pipe
	5DLS2				1 7/8" to 21" slip length pipe
58DVA-F6	6EFA	5DT-AF6	5DF	5DF	Flashing, 0/12 to 6/12 roof pitch
58DVA-F12	6EFB	5DT-AF12	5DF12	5DF-12	Flashing, 7/12 to 12/12 roof pitch
58DVA-FF	6EF			5DFT	Flat Roof Flashings
58DVA-CFK	4MF				Masonary Flashing

QUALIFIED INSTALLERS ONLY

Allowable Co-Axial Vent Configurations

Figure 57 shows the range of venting options using either vertical or horizontal terminations; any layout that remains within the shaded area is acceptable. Having the fewest number of elbows is ideal as they tend to restrict air movement. The total length of horizontal vent pipe can not exceed 20 feet (6.1m) and the total vent length can not exceed 40ft (12.2m). Any combination of rise and run can be used as long as it lays within the shaded area (a total of three (3) 90° elbows or six (6) 45° elbows can be used. In addition to what is shown, if a 90° elbow is used in the horizontal plane, 3 feet (91.4cm) must be subtracted from the allowable horizontal run (for each 45° elbow, 1½ feet (45.7cm) must be subtracted).

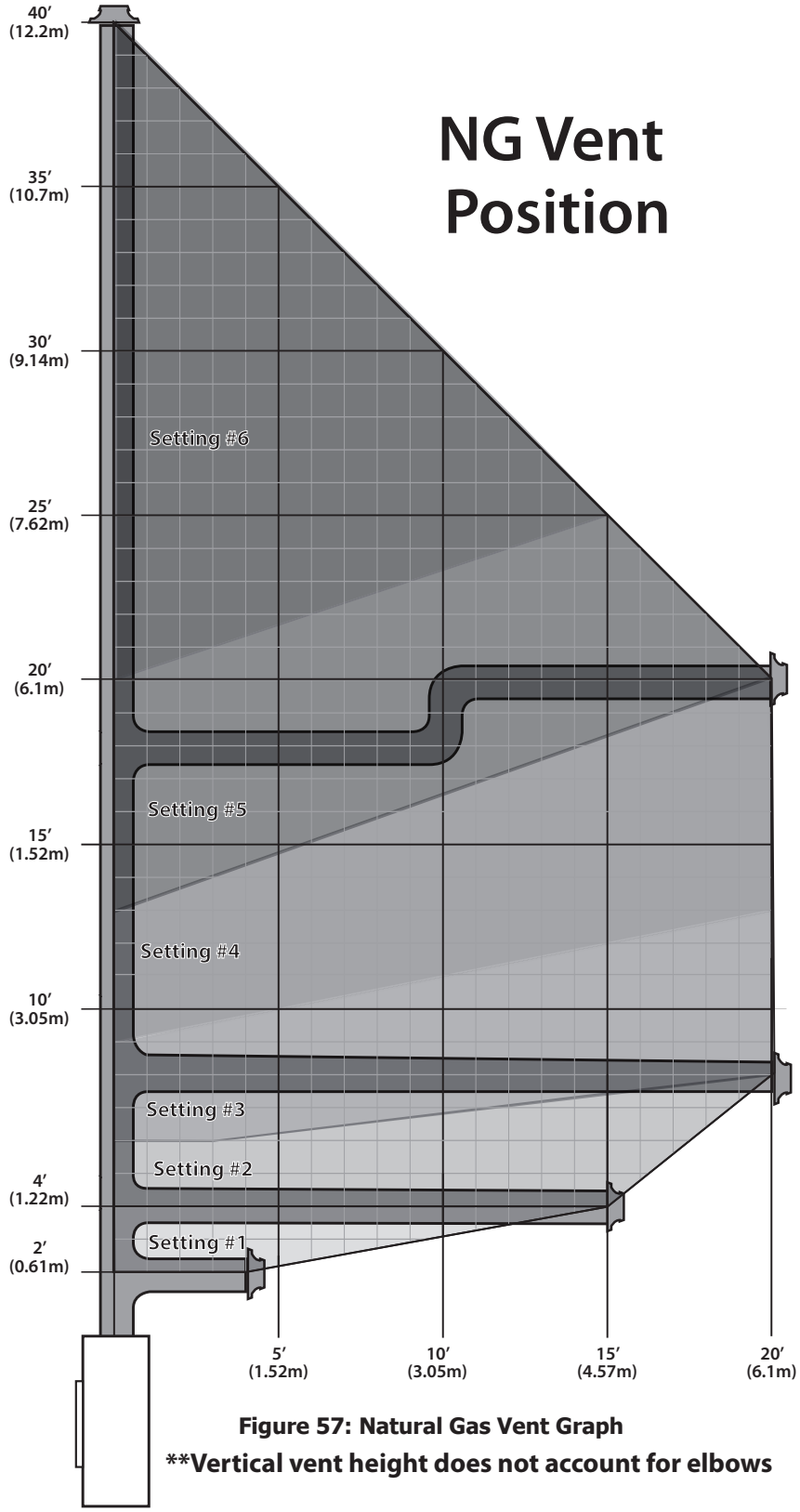

Figure 57: Natural Gas Vent Graph

****Vertical vent height does not account for elbows**

Note: The unit will come with 6 restrictor rings. One of these rings may be needed depending on the vent configuration. This must be installed in order to achieve proper efficiency and flame appearence.

Flame Appearence: Pin point on the graph where your vent configuration will lay. Remember to consider elbows in the HORIZONTAL plane account for horizontal distance as stated above. Use the corresponding exhaust restrictor accorinding to the graph. See the following section in this manual for installation details. Your climate and altitude may alter what restrictor is required for your particular application.

If your flame is low, flickery, and more blue then increase the restrictor one size. If your flame is tall, thin, and lazy then decrease the restrictor one size. Use your judgement after the unit has been running for about 20 minutes.

Caution: Wait until the unit has completely cooled before changing the restrictor.

Does your vent configuration fall outside the limits? Use our power vent kit (50-3884) for a much broader venting range.

QUALIFIED INSTALLERS ONLY

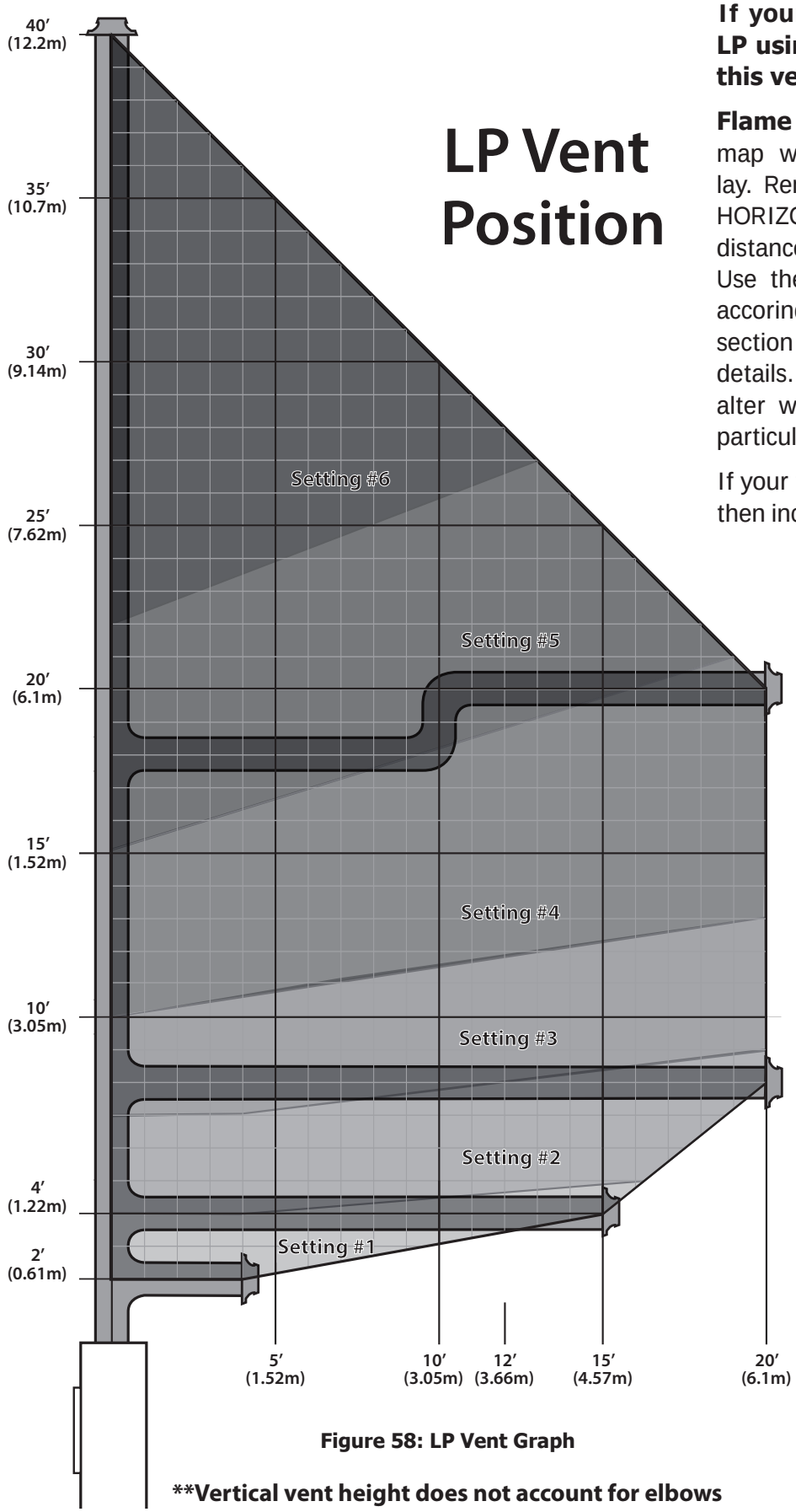

Figure 58: LP Vent Graph

****Vertical vent height does not account for elbows**

If your C601-T as been converted to LP using 50-4368 conversion kit, use this venting diagram.

Flame Appearence: Pin point on the map where your vent configuration will lay. Remember to consider elbows in the HORIZONTAL plane account for horizontal distance as stated on the previous page. Use the corresponding exhaust restrictor accorinding to the graph. See the following section in this manual for installation details. Your climate and altitude may alter what restrictor is required for your particular application.

If your flame is low, flickery, and more blue then increase the restrictor one size. If your flame is tall, thin, and lazy then decrease the restrictor one size. Use your judgement after the unit has been running for about 20 minutes. If your having difficulty achieving a healthy flame with LP then try opening the air shutter completely.

Caution: Wait until the unit has completely cooled before changing the restrictor.

Does your vent configuration fall outside the limits? Use our power vent kit (50-3884) for a much broader venting range.

QUALIFIED INSTALLERS ONLY

Exhaust Restrictor Setting

WARNING: Improperly set restrictor setting can cause overheating issues which can lead to building fire.

It may be necessary to adjust the exhaust restrictor in order to control combustion quality and flame appearance. There are six different restrictor settings.

Determine what restrictor setting you require using the vent graphs in "Allowable Co-Axial Vent Configurations". The restrictor is set to 1 when the flat edge of the dial is vertical (see Figure 59). Rotate the dial counter-clockwise to increase the restriction level successively until the appropriate setting is achieved. When the flat edge is horizontal the restrictor level is at its maximum (see Figure 60). The proper setting is crucial for an efficient burn and best possible flame appearance.

It may be necessary to deviate from the recommended setting as different altitudes and climates can vary the operation of the fireplace. With LP fueled fireplaces, it is always a good idea to offer slightly less restriction for higher altitudes to reduce the risk of sooting over an extended period.

1. Remove the safety screen and top discharge accelerator.
2. Use a 7/16 socket with long extension to adjust the restrictor dial according to the vent graph.
3. Reinstall top discharge accelerator and safety screen.
4. Allow unit to warn up sufficiently and make adjustments as needed.

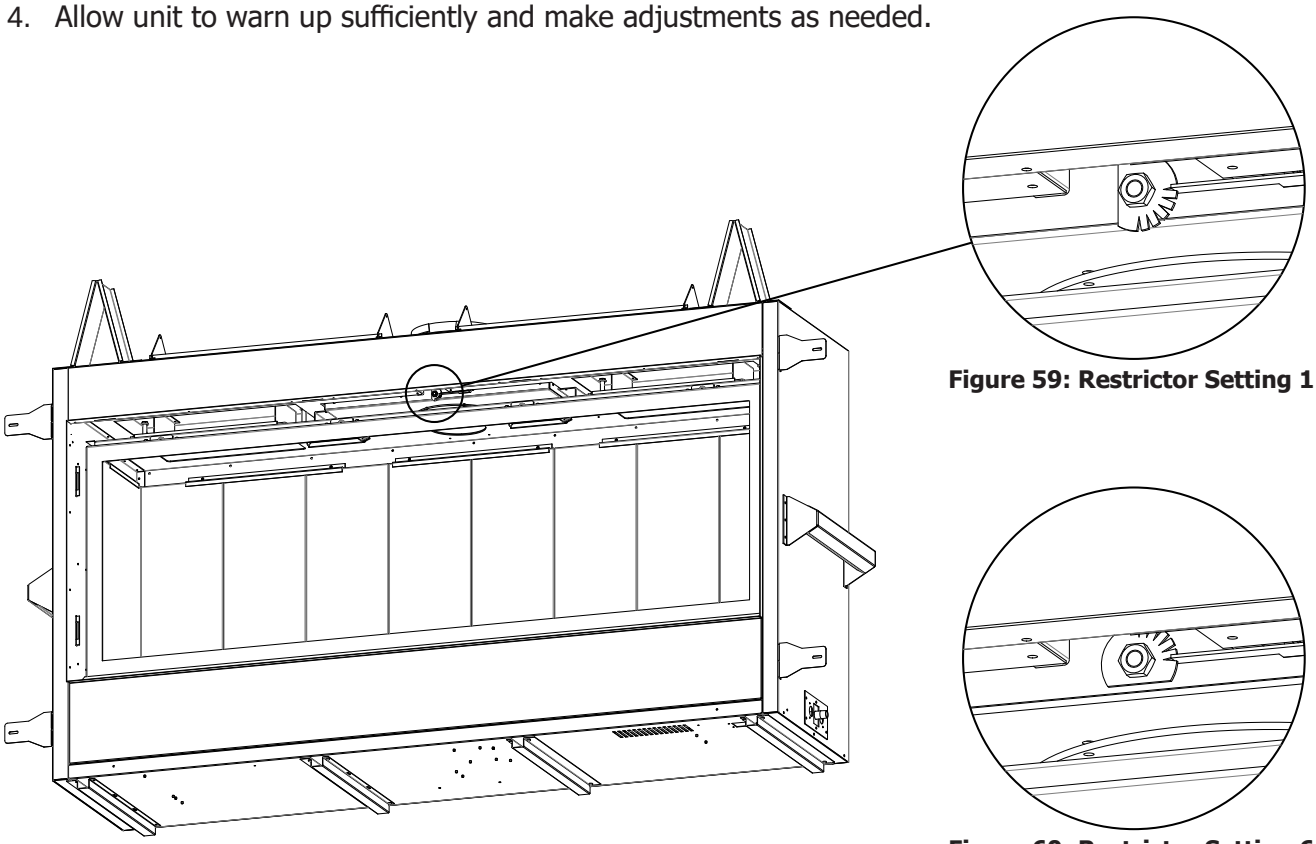

Figure 59: Restrictor Setting 1

Figure 60: Restrictor Setting 6

QUALIFIED INSTALLERS ONLY

Horizontal Termination

1. **A MINIMUM OF 24" [610mm] VERTICAL RISE PLUS AN ELBOW IS REQUIRED WHEN HORIZONTALLY TERMINATING WITH AN APPROVED VENT CAP.**
2. **Horizontal pipes must not be level. For every 12" (305 mm) of horizontal travel (away from the stove), there should be at least ¼" (6.4 mm) of vertical rise. Never allow the vent to run downward, as this could cause high temperatures or even present the possibility of a fire.**
3. The exterior of the horizontal vent termination must not be blocked or obstructed.
4. If the vent termination is not being attached to wood, the four wood screws provided should be replaced with material appropriate fasteners.
5. For buildings with vinyl siding, a vinyl standoff should be installed between the vent cap and the exterior wall. Attach the vinyl siding standoff to the horizontal termination. Note that the termination bolts onto the flat portion of the standoff, providing an air space between the wall and the vent termination. The air gap prevents excessive heat from possibly melting the vinyl siding.

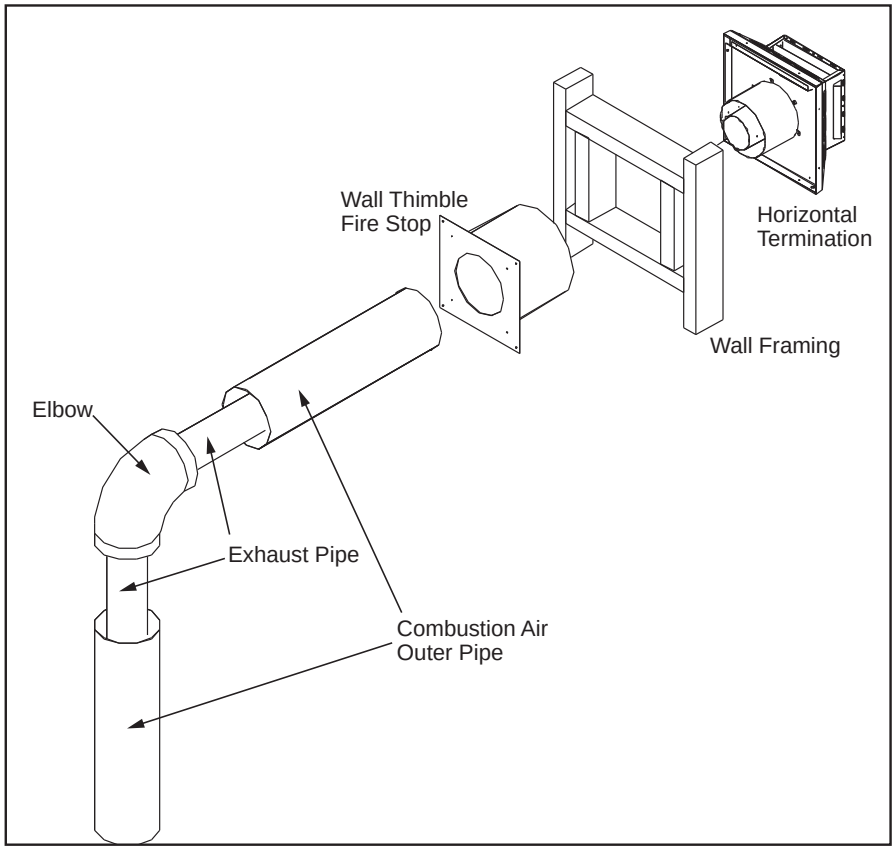

Figure 61: Horizontal Vent Termination

6. Horizontal pipes must be supported every **3' (914 mm)**. Plumber's all round strap will suffice.
7. Ensure venting clearances are maintained, see page 38 for details.

Step 1. Set the fireplace in the desired location. Check to determine if wall studs will be in the way when the venting system is attached. If this is the case, the location of the fireplace may have to be adjusted or the venting may have to be offset.

Step 2. Direct vent pipe sections are designed with special twist-lock connections. Dry fit the desired combination of pipe and elbows to the appliance adaptor.

Step 3. With the pipe in the correct position and attached to the fireplace, mark the wall for a hole as directed by specified wall thimble dimensions. Cut and frame the hole in the exterior wall where the vent will be terminated. If the wall being penetrated is made of a non-combustible material (i.e. masonry or concrete) a **8 1/2" (21.6 cm)** hole is acceptable.

QUALIFIED INSTALLERS ONLY

Step 4. With the hole now framed, the wall thimble installed, and the pipe extending into the wall, proceed to the outside. Attach the termination to the pipe using RTV and Mil-Pac or Rutland No 78 Stove and Gasket Cement to seal joints. The vent pipe must extend into the vent cap at least **1¼ inches (3.2 cm)**. Secure the connection between the vent cap and the pipe by attaching the two (2) sheet metal straps, which extend from the vent cap assembly to the outer wall of the vent pipe. Bend any remaining portion of the strap back towards the vent cap. Security Secure Vent uses a twist lock cap.

Step 5. Position the horizontal vent termination in the center of the **10" (25.4 cm)** square hole and attach to the exterior wall with the four screws provided. The arrow on the vent termination should be pointing up. Run a bead of non-hardening mastic around the edges of the vent cap, to make a seal with the wall. Ensure the proper clearances to combustibles have been maintained.

Vertical Termination

Step 1. Check the instructions for required clearances (air spaces) to combustibles when passing through ceilings, walls, roofs, enclosures, attic rafters, or other nearby combustible surfaces. Do not pack air spaces with insulation.

Step 2. Set the gas appliance in the desired location. Drop a plumb bob down from the ceiling to the position of the appliance flue exit, and mark the location where the vent will penetrate the ceiling. Drill a small hole at this point. Next, drop a plumb bob from the roof to the hole previously drilled in the ceiling, mark the spot where the vent will penetrate the roof. Determine if ceiling joists, roof rafters, or other framing will obstruct the venting system. You may wish to relocate the appliance, or to offset, to avoid cutting load bearing members.

Step 3. To install the Round Support Box/Wall Thimble in a flat ceiling, cut a **10 " (25.4 cm)** square hole in the ceiling, centered in the hole drilled in Step 2. Frame the hole as shown in Figure 62.

Step 4. Assemble the desired lengths of black pipe and elbows necessary to reach from the appliance adapter up through the Round Support Box. Insure that all pipe and elbow connections are in their fully twist-locked position.

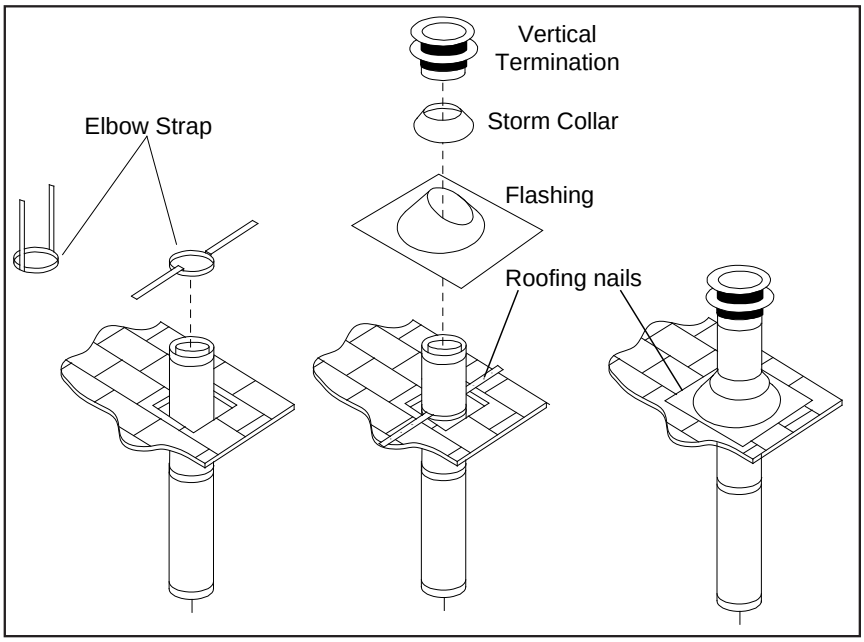

Figure 62: Vertical Vent Termination

QUALIFIED INSTALLERS ONLY

Step 5. Cut hole in the roof centered on the small hole placed in the roof from Step 2. The hole should be of sufficient size to meet minimum requirements for Clearance to Combustibles, as specified. Continue to assemble lengths of pipe and elbows necessary to reach from the ceiling support box up through the roof line. Galvanized pipe and elbows may be utilized in the attic, as well as above the roof line. The galvanized finish is desirable above the roof line, due to the higher corrosion resistance.

Step 6. Once the pipe sections have been joined, and run up through the hole in the roof, slip an elbow strap over the exposed sections, bend the support straps outwards, and push the elbow strap down to the roof level, as shown in Figure 62. Tighten the clamp around the pipe section. Use a level to make sure the pipe is truly vertical. With roofing nails, secure the support straps to the roof. Seal the nails holes heads with non-hardening mastic. Trim the excess length of the support straps that extend out beyond the edge of the flashing.

Step 7. Slip the flashing over the pipe section protruding through the roof. Secure the base of the flashing to the roof with roofing nails. Use a non-hardening sealant between the uphill edge of the flashing and the roof. Insure the roofing material overlaps the top edge of the flashing. Verify that you have at least the minimum clearance to combustibles at the roof line.

Step 8. Continue to add pipe sections until the height of the vent cap meets the minimum code requirements. Refer to Figure 63 and Table 7. Note that for steep roof pitches, the vent height must be increased. In high wind conditions, nearby trees, adjoining roof lines, steep pitched roofs, and other similar factors can result in poor draft, or down drafting. In these cases, increasing the vent height may solve the problem.

Step 9. Slip the storm collar over the pipe, and push it down to the top of the roof flashing as shown in Figure 62. Use the non-hardening sealant around the joint between the pipe and the storm collar.

Step 10. Twist-lock the vent cap.

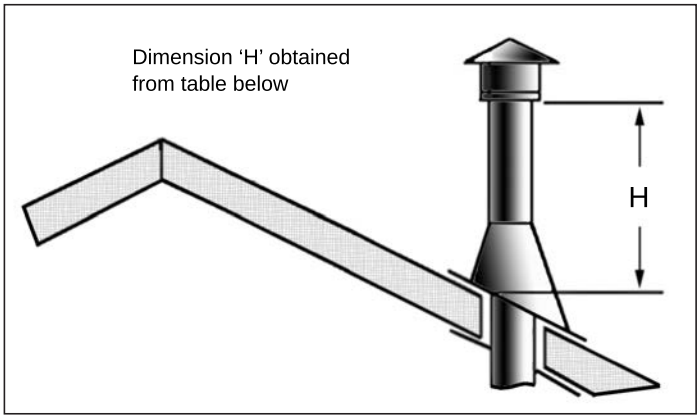

Figure 63: Height of Vertical Termination; Reference Table 7

Table 7: Minimum 'H' for Figure 63.

Roof Pitch	Minimum Height (H)	
	Feet	Meters
Flat to 7/12	1	0.3
Over 7/12 to 8/12	1.5	0.46
Over 8/12 to 9/12	2	0.61
Over 9/12 to 10/12	2.5	0.76
Over 10/12 to 11/12	3.25	0.99
Over 11/12 to 12/12	4	1.22
Over 12/12 to 14/12	5	1.52
Over 14/12 to 16/12	6	1.83
Over 16/12 to 18/12	7	2.13
Over 18/12 to 20/12	7.5	2.29
Over 20/12 to 21/12	8	2.44

QUALIFIED INSTALLERS ONLY

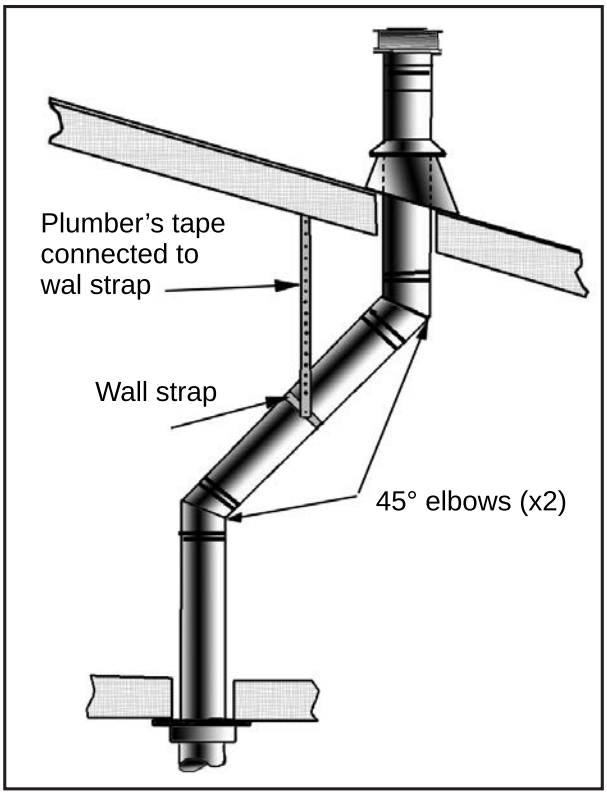

Figure 64: Use of Wall Straps.

(4) Any occupied areas above the first floor, including closets and storage spaces, which the vertical vent passes through, must be enclosed. The enclosure may be framed and sheet-rocked with standard building materials. However consult the appliance manufactures installation instructions for the minimum allowable clearance between the outside of the vent pipe, and the combustible surfaces of the enclosure. Do not fill any required air spaces with insulation.

NOTES:

(1) If an offset is necessary in the attic to avoid obstructions, it is important to support the vent pipe every **3' (914 mm)**, to avoid excessive stress on the elbows, and possible separation. Wall straps are available for this purpose (see Figure 64).

(2) When ever possible, use 45° degree elbows instead of 90° degree elbows. The 45° degree elbow offers less restriction to the flow of flue gases and intake air.

(3) For multi story installations; a ceiling firestop is required at the second floor, and any subsequent floors (see Figure 65). The opening should be framed to **10" (254 mm)** x **10" (254 mm)** inside dimensions, in the same manner as shown in Figure 65.

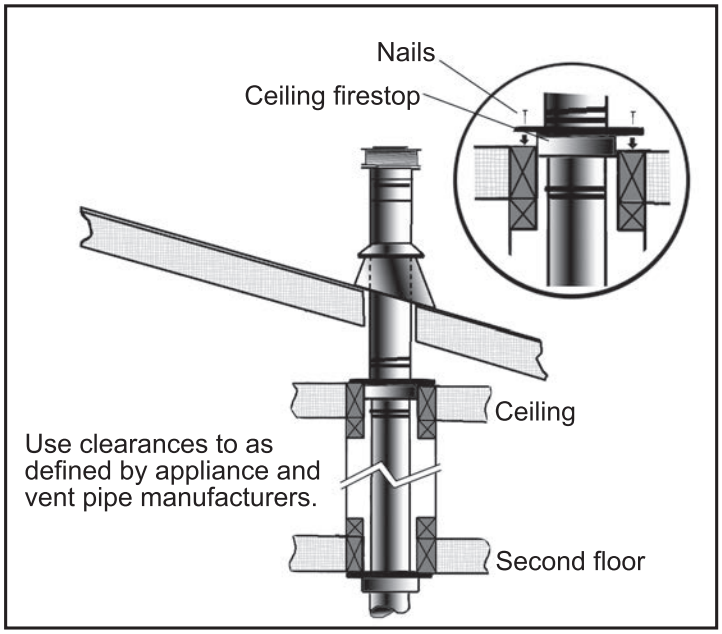

Figure 65: Multi-Story Vent Pipe Installation

QUALIFIED INSTALLERS ONLY

Gas Line Connection and Testing

WARNING: Only persons licensed to work with gas piping may make the necessary gas connections to this appliance.

GAS LINE CONNECTION

- This stove is equipped with a certified flexible pipe located on the right side of the unit terminating in a 3/8″ Male NPT fitting. Consult your local authorities codes or the CAN/CGA B 149 (1 or 2) installation code in Canada, or in the USA gas installations follow either local codes or the current edition of the National Fuel Gas Code ANSI Z223.1.
- The efficiency rating of this appliance is a product thermal efficiency rating determined under continuous operating conditions and was determined independently of any installed system.

The appliance and its shutoff valves must be disconnected from the gas supply piping system during any pressure testing where the pressure exceeds ½ PSIG (3.45 KPa) or damage will occur to the valve.

The appliance must be isolated from the gas supply piping system by closing its individual manual shutoff valve during any pressure testing of the gas supply piping system at test pressures equal to or less than ½ psig (3.45 KPa).

Always check for gas leaks with a soap and water solution after completing the required pressure test.

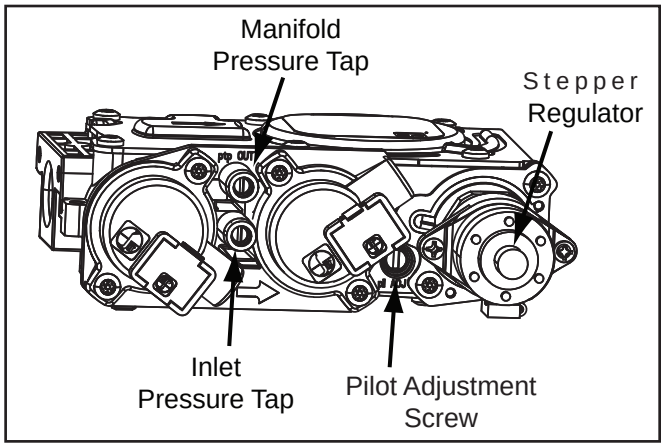

Figure 66: Fully Labeled Gas Valve

TO TEST VALVE PRESSURES

The pressure taps are located on the top right of the valve shown in Figure 66.

- Turn set screw 1 turn counter clockwise to loosen,
- Place 5/16” (8 mm) I.D. hose over pressure tap system.
- Check pressures using a manometer.
- When finished, release pressure, remove hose & tighten set screw.

Table 8: Pressure and BTU Information.

	Natural Gas	Propane
Main Orifice	#28	#44
Manifold Pressure	3.6” W.C. (0.89 KPa)	10.0” W.C. (2.49 KPa)
Min. Manifold Pressure	1.6” W.C. (0.39 KPa)	6.4” W.C. (1.59 KPa)
Max Supply Pressure	7.0” W.C. (1.74 KPa)	11.0” W.C. (2.74 KPa)
Min. Supply Pressure	4.5” W.C. (1.12 KPa)	10.4” W.C. (2.59 KPa)
Max BTU/hr Input	51,000 BTU/hr (14.95 KW)	51,000 BTU/hr (14.95 KW)
Min. BTU/hr Input	34,000 BTU/hr (9.96 KW)	39,500 BTU/hr (11.58 KW)

NEVER USE AN OPEN FLAME FOR LEAK TESTING.

QUALIFIED INSTALLERS ONLY

Electrical Requirements

The fireplace must be electrically connected and grounded in accordance with local codes or, in the absence of local codes, with the current CSA C22.1 Canadian Electrical Code Part 1, Safety Standards For Electrical Installations, or The National Electrical Code ANSI / NFPA 70 in the US.

WARNING: The electrical grounding instructions must be followed. The fan kit is equipped with a three-prong (grounding) plug for your protection against shock hazard, and should be plugged directly into a properly grounded three-prong outlet. DO NOT cut or remove the grounding prong from this plug.

CAUTION: When servicing controls, label all wires prior to disconnection. Wiring errors can cause improper and dangerous operation. Verify proper operation after servicing.
If any of the original wire as supplied with the appliance must be replaced, it must be replaced with 18 AWG wire with a temperature rating of 105°C

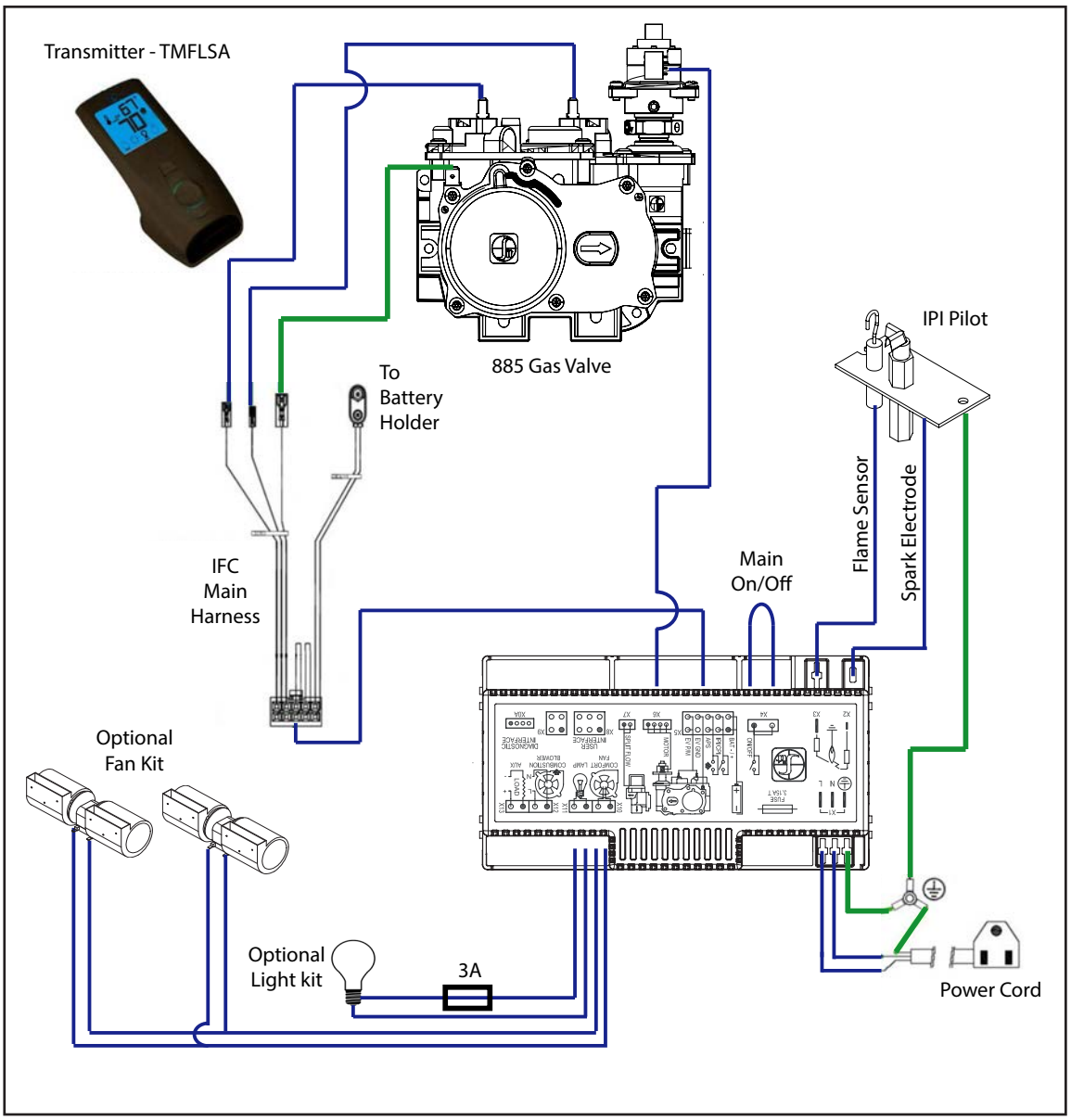

Figure 67: C60I-T Wiring Diagram

QUALIFIED INSTALLERS ONLY

The C60I-T needs a hard-wired power connection in order for the unit to operate. There is also a battery pack that takes four AA batteries in case there is a power loss.

All electrical connections must be made by a certified electrician.

There is an electrical box located in the cabinet on the left side of the fireplace. The Power wire connection is to be made inside the elctrical box. There is a strain relief on the outside of the cabinet to secure the wiring in place. Wire incoming power to the supplied receptacle as shown in Figure 68.

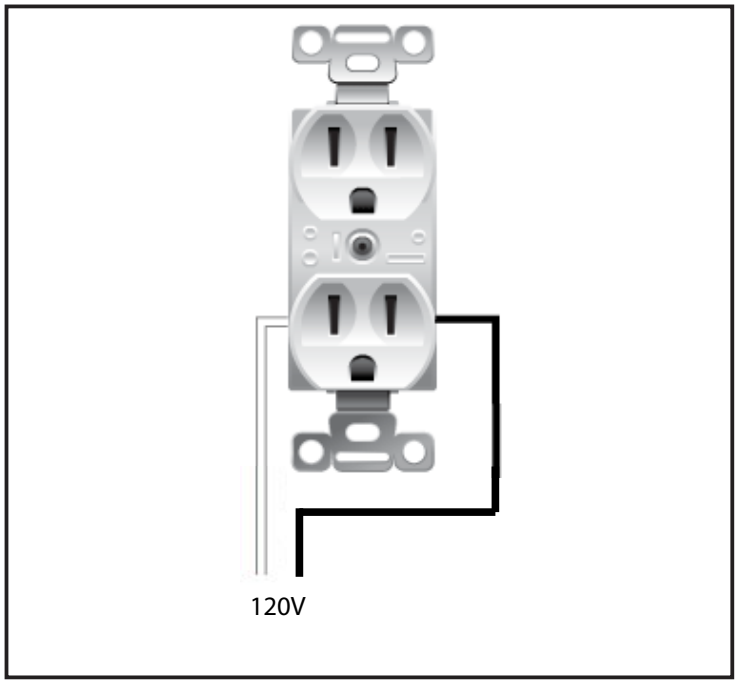

Figure 68: C60I-T Receptacle Wiring

C60 IPI Dual Covection Fan Kit (50-4173)

The C60I-T has an optional dual convection fan kit that can be installed at before or after the fireplace installation. The fans are operated by the remote controller. The fans can be turned on or off at anytime with the remote. There are also 6 different fan speed settings.

The fireplace must be electrically connected and grounded in accordance with local codes or, in the absence of local codes, with the current CSA C22.1 Canadian Electrical Code Part 1, Safety Standards For Electrical Installations, or The National Electrical Code ANSI / NFPA 70 in the US..

CAUTION: When servicing controls, label all wires prior to disconnection. Wiring errors can cause improper and dangerous operation. Verify proper operation after servicing. If any of the original wire supplied with the appliance must be replaced, it must be replaced with 18 AWG wire with a temperature rating of 105°C.

QUALIFIED INSTALLERS ONLY

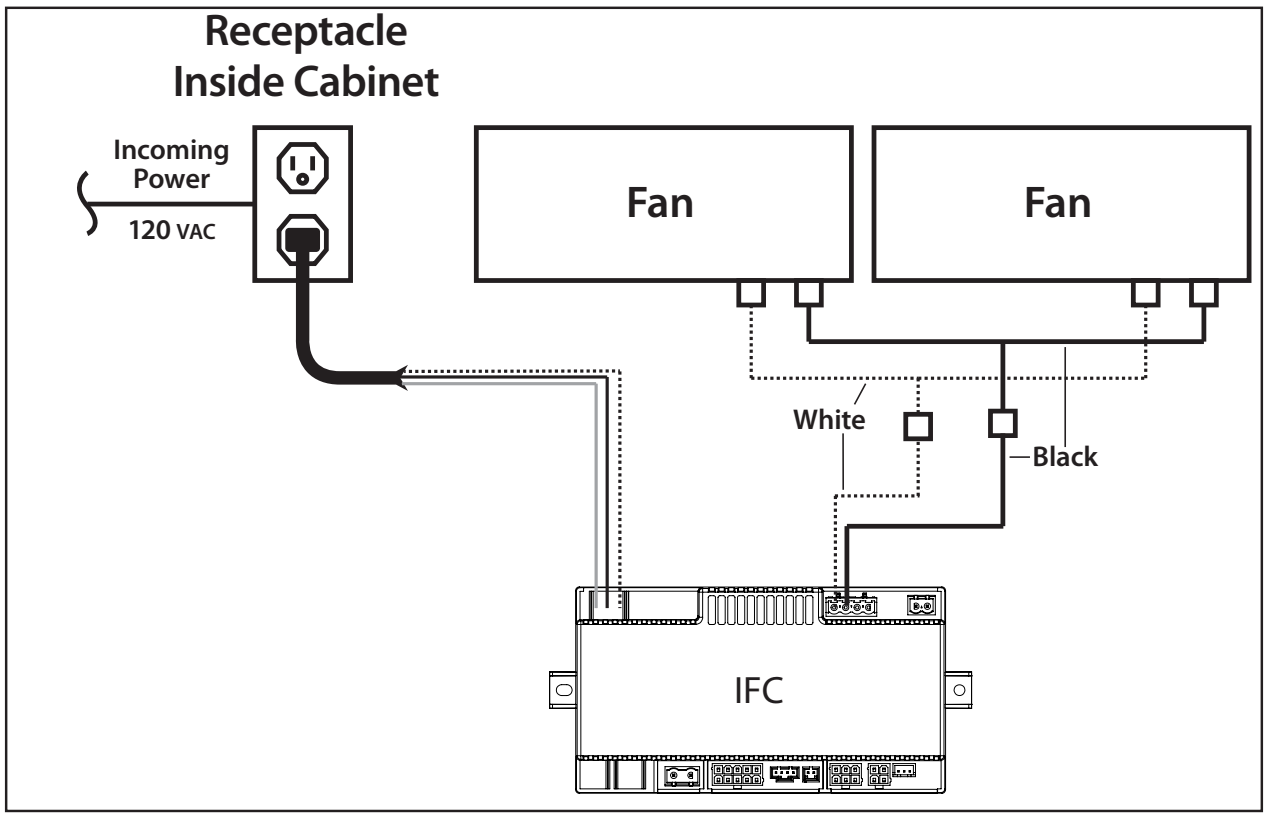

Figure 69: C60I-T Fan Kit Wiring Diagram

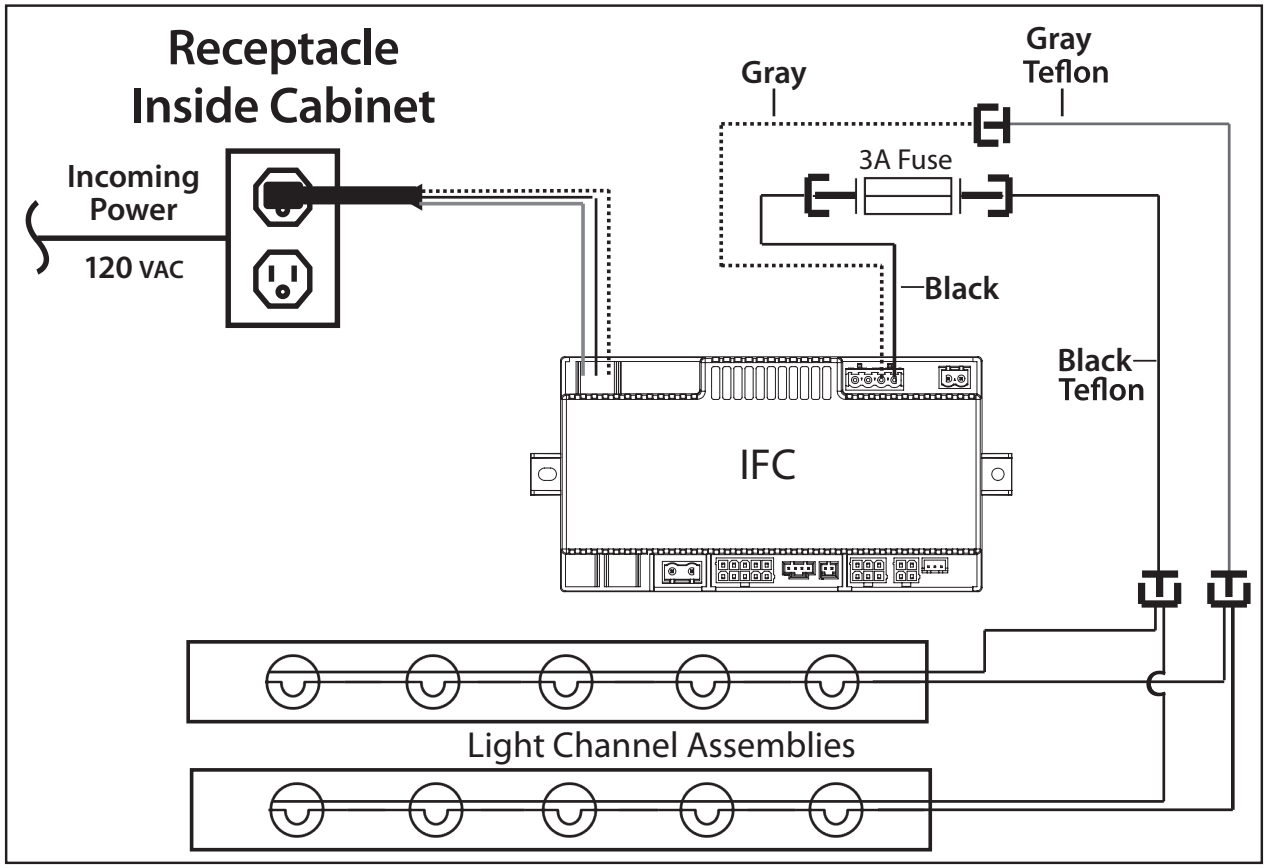

Figure 70: Light Kit Wiring Diagram. C60I-T Light Kit Wiring Diagram.

C60 Light Kit (50-3342)

The C60I-T has an optional light kit that is wired into the IFC.

The fireplace must be electrically connected and grounded in accordance with local codes or, in the absence of local codes, with the current CSA C22.1 Canadian Electrical Code Part 1, Safety Standards For Electrical Installations, or The National Electrical Code ANSI / NFPA 70 in the US..

CAUTION: When servicing controls, label all wires prior to disconnection. Wiring errors can cause improper and dangerous operation. Verify proper operation after servicing. If any of the original wire supplied with the appliance must be replaced, it must be replaced with 18 AWG wire with a temperature rating of 105°C. If the original wire supplied to the light bulbs is damaged you must contact your dealer. This is special high rated oven wire and it must be replaced with the same.

Burner Tray Installation

There are two styles of burner tray. The standard burner tray is supplied with the unit and used for all media base options with the exception of 50-3342 (Light Kit); the Light Kit includes a perforated burner tray to allow light to come through. Both tray styles are handled the same and removed with 6 screws using a T-20 screwdriver.

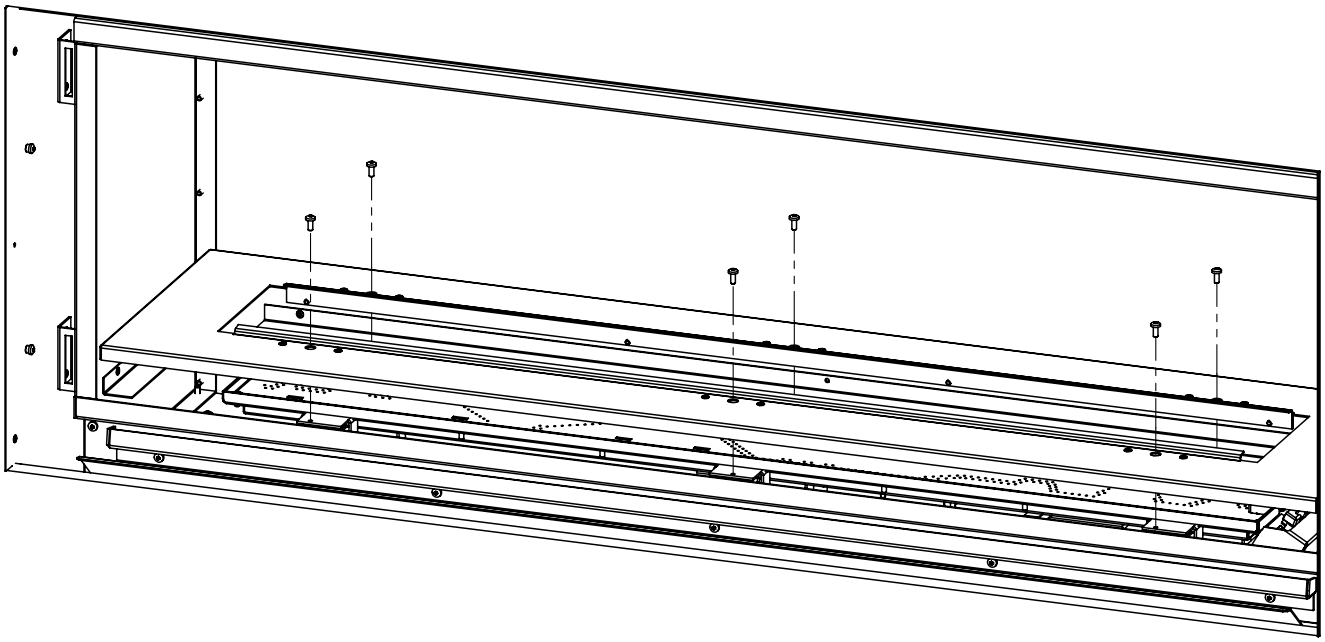

Figure 71: Standard Burner Tray Install/Removal

Bezel Installation

The unit comes with a set of burner bezels. There are two long bezels, one short, and one short with a notch cutout.

1. Remove the safety screen and glass door
2. Place the bezels directly onto the burner platform as shown in Figure 72. No fasteners are required.
3. Ensure that the short, notched bezel is placed around the pilot assembly as shown in Figure 73.

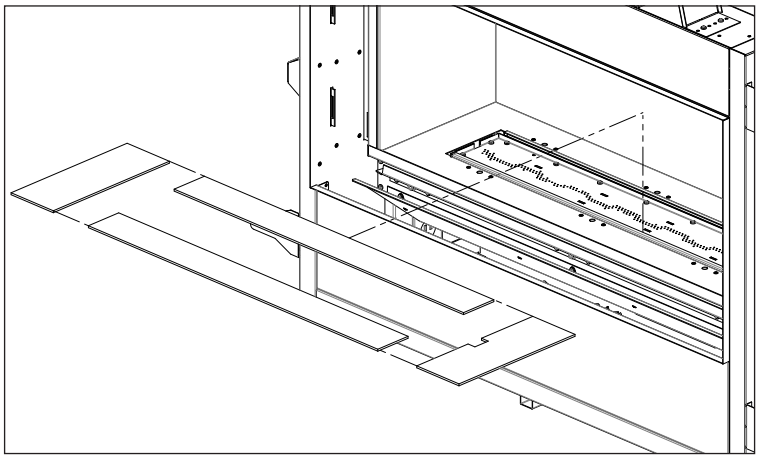

Figure 72: Burner Bezel Placement

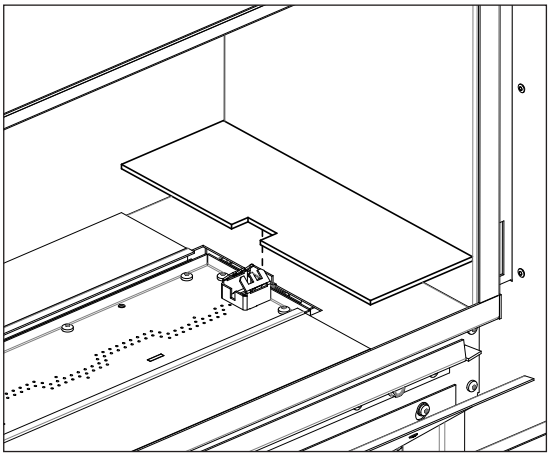

Figure 73: Bezel Placement Around Pilot

Panel and Media Installation

1. Remove the safety screen and glass door

2. If you are installing 50-3342 (Light Kit) remove the burner tray now using a T-20 Torx screwdriver; refer to Secondary Installation - Light Kit Installation or see instruction sheet included with the kit. Install perforated burner tray once lights are installed.

3. Place your burner media into the burner pan (vermiculite or glass media). Create a **thin layer** that evenly covers the entire burner pan; pat it down gently. **If flame looks uneven with overly high or low sections the media can be adjusted. If flame is too high make media thicker, if low thin media out.**

WARNING: Be sure there is no media in the protected pilot area of the burner pan.

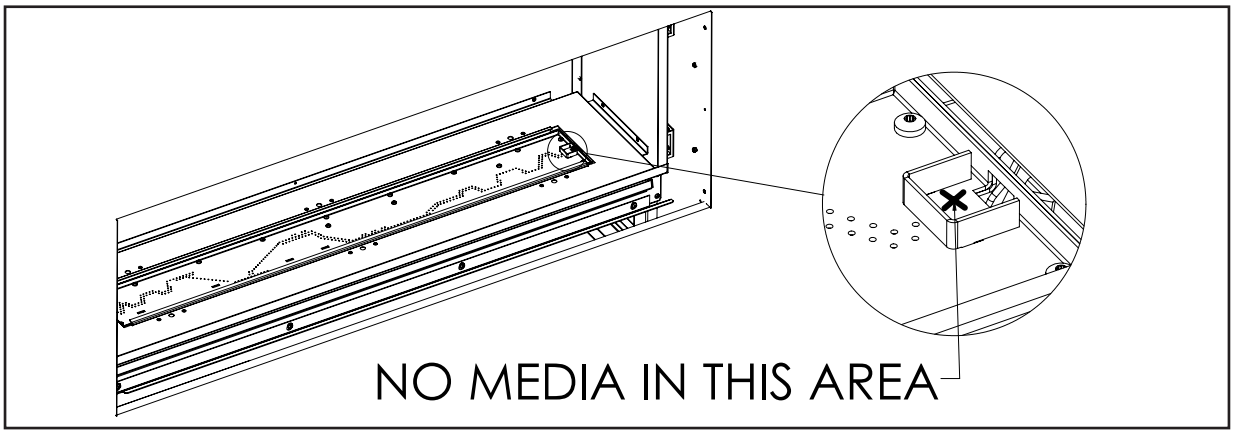

Figure 75: Protected Pilot Area

4. Wear clean vinyl gloves when handling 50-3338 (Fluted) and 50-3339 (Ledgestone) to prevent skin contact with the refractory. Wear clean vinyl gloves when handling 50-3340 (Enameled) to prevent smudging; use denatured alcohol to clean. Unwrap your new Enviro liner set from the protective packaging. Be careful not to scratch or bump the liners as they are very fragile. If the liners arrive damaged please contact your nearest Enviro dealer.

5. Remove the 3 liner retainers from inside the firebox, loosen screws using a T-20 Torx screwdriver. The retainers are key slotted so they can be removed without removing the screws. Then remove the existing steel liners starting with the sides first.

6. Ensure there is nothing on top of the media tray such as glass media or glass bezel strips. Angle the rear liner into the firebox with finesse. The panel will fit in, dont worry, place one corner in towards the back and rotate inward. Slip it into the channel behind the media tray and install the rear liner retainer.

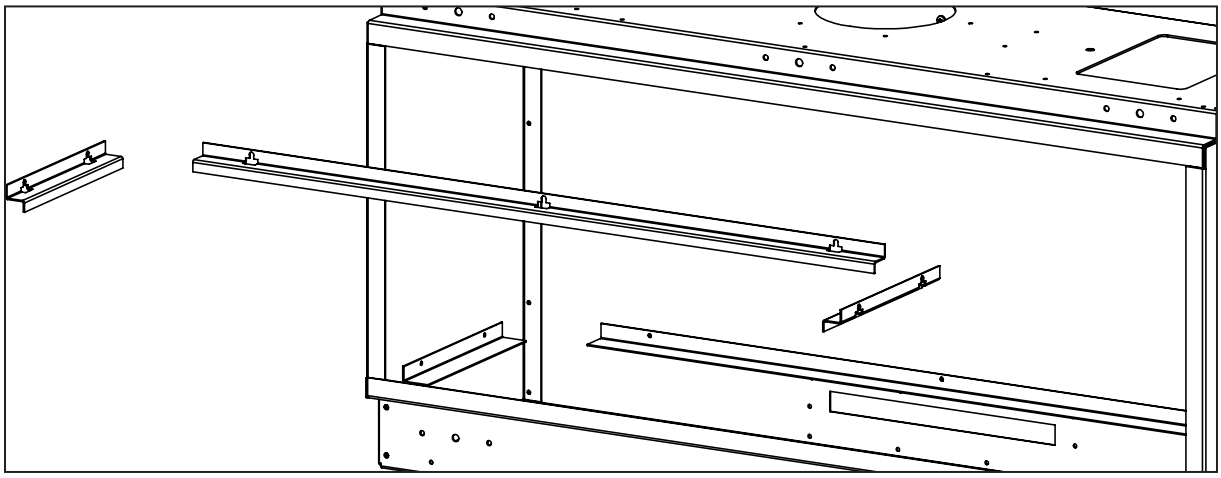

Figure 74: Panel Installation

7. If you have media tray option 50-3343 (Glass Bezel) place the bezel strips around the tray before the side liners are installed. If you are using 50-3344 (Glass Media Bed) or 50-3342 (Light Kit) install tray media after the side liners.

8. Place the side liners into the side channels of the media tray. 50-3339 (Ledgestone) and 50-3340 (Enameled) will be placed in at the bottom and rotated up until seated. 50-3338 (Fluted) will be placed in at the rear and rotated inward until seated. Once seated secure the top with the retainers using a T-20 Torx screwdriver. If using 50-3343 (Glass Bezel) pull the sides in so they butt up with the long strips.

Figure 76: Glass Bezel with Vermiculite

9. If you are using 50-3344 (Glass Media Bed) or 50-3342 (Light Kit) you may now cover the entire media tray in a thin layer of glass pebbles; one layer is all you need.

Figure 77: Glass Media Bed

10. You have now successfully installed your panels and media base. You may now arrange your optional 50-3347 (Log & Rock Set); see instruction sheets for further detail.

11. Re-install the glass door and safety screen.

IMPORTANT: IF THE AIR SLOT AROUND THE BURNER IS BLOCKED WITH MEDIA THIS WILL CAUSE THE FIREPLACE NOT TO BURN PROPERLY.

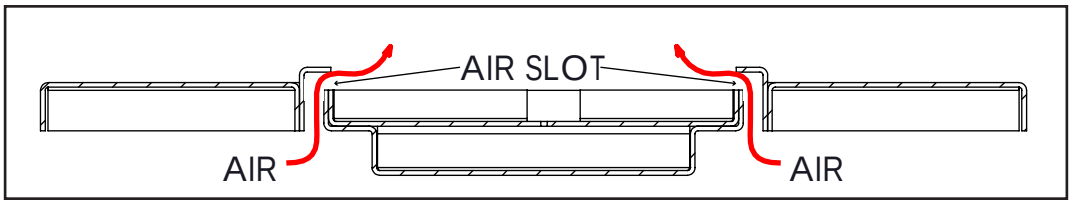

Figure 78: Burner Side Cross Section

Table 9: Troubleshooting

Problem	Possible Cause	Solution
Locking conditions	Reset the Proflame IFC board	· Turn the system off by pressing the ON/OFF button on the transmitter
		· After approximately 2 seconds press the ON/OFF button on the transmitter again.
		· In the manual flame control mode, use the down arrow button to reduce the flame to off, indicated by the word OFF displayed on the transmitter LCD screen.
		· Wait approximately 2 seconds and press the up arrow button, the ignition sequence will start.
Main burners will not start	The pilot flame has gone out	· See “Pilot will not remain lit”
	The remote control is not working correctly	· Replace the batteries
	The thermostat is disconnected or set too high	· Set the thermostat to a lower temperature
	Problem with thermopile circuit	· Check gas line pressure
		· Check wiring to thermostat for breaks
		· Check for flame impingement on thermopile
Flame lifting	Leak in vent pipe	· Check for leaks in vent connections
	Improper vent configuration	· Check vent configuration with manual
	Terminal may be re-circulating flue gases	· Check to see if terminal is on correctly
		· May need to install high wind termination cap.
		· Contact dealer
Blue Flames	The heater has just been started	· Normal during start up: flame will yellow as the fireplace heats up
	Improper air shutter adjustment	· Adjust air shutter – contact your dealer
Glass fogs up	Normal condition: after the appliance warms up the glass will be clear.	**Due to additives in gas, glass may get hazy during operation** Clean as needed.
Flames are burning “dirty” or sooting	The logs are placed incorrectly	· Check log positioning
	Improper air shutter adjustment	· Increase primary air by opening the air shutter and/or by opening the vent restrictor
		· Check for proper venting and blockage of the vent termination
		· See also “Burners will not remain lit”
	Incorrect rating input	· Check manifold pressure and clock input rating for over-firing

If a particular flame is curving excessively your burner media not be evenly distributed creating an abnormal draft on the flame; position burner media infront of the secondary air slots in the affected area to slow down the draft. You can fine tune the flame this way to ensure healthy flame appearence.

Parts Diagram

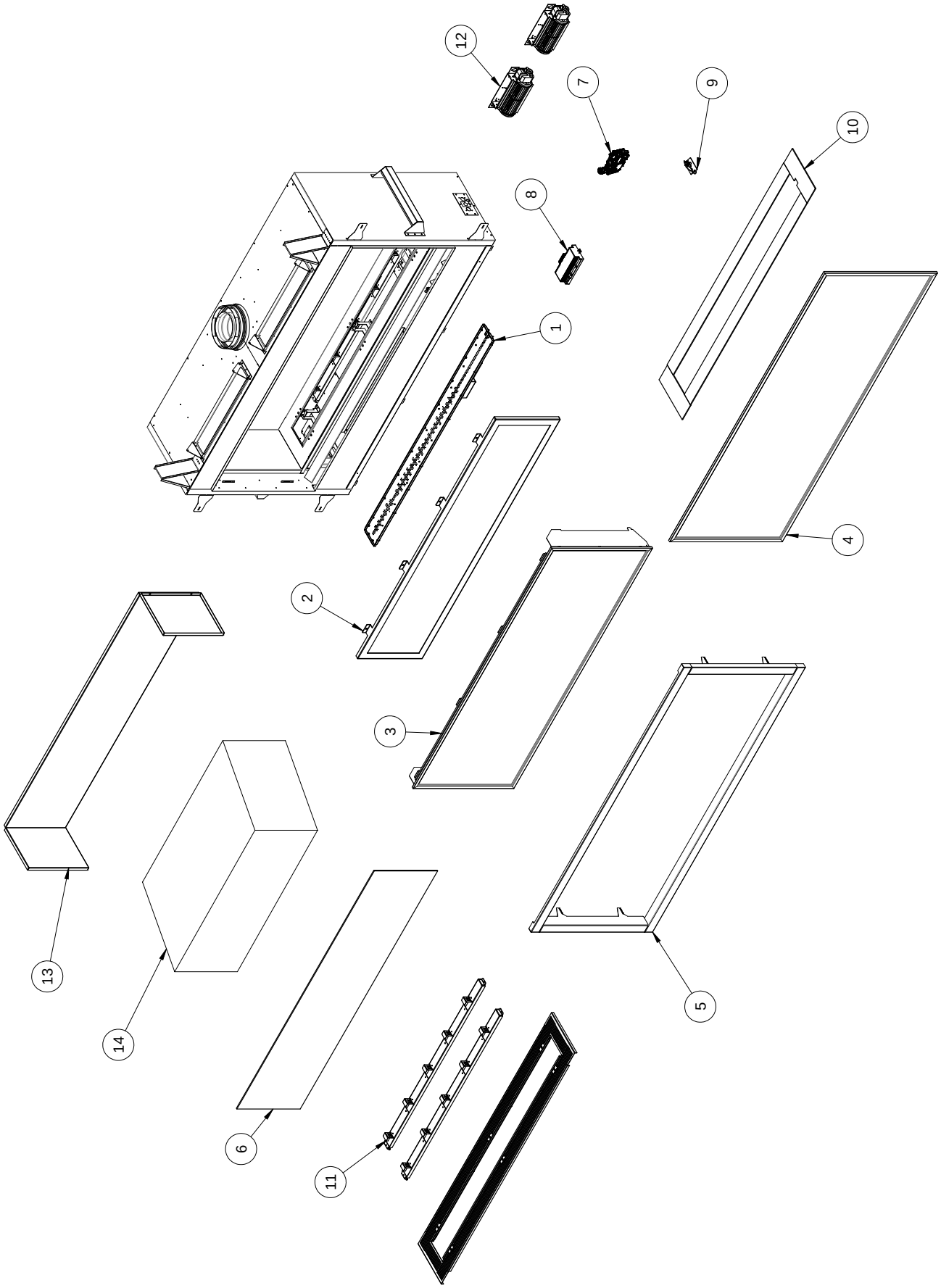

Table 10: C60I-T Parts List

Reference #	Part Description	Part #
1	C60T Pan Burner w/ Pilot Shield N/C	50-4306
2	C60T Door Complete	50-4307
3	C60T Safety Screen Complete	50-4308
4	C60T Clear View Screen Only	50-4309
5	C60T Slim Line Surround	50-3994
-	C60T Borderview Surround Powder Coated (Grey)	50-3995
6	C60T Door Glass with Gasket	50-4310
7	S.I.T. 885 Valve w/ NG Stepper Motor	50-2682
8	Proflame 2 IFC w/ 7-Day Shutdown	50-4103
9	IPI NG Pilot Assembly (2021)	50-4058
-	IPI LP Pilot Thimble (2021)	50-4080
10	C60 Tray w/ Glass Bezel (Glass beads and Vermiculite)	50-3343
11	C60 Halogen Light Kit	50-3342
12	IPI Dual Convection Fan Kit (240 CFM Combined)	50-4173
-	C60 Fan Only	50-3798
13	C60T Fluted Liners	50-3991
-	C60T Ledgestone Liners	50-3992
-	C60T Black Enameld Liners	50-3993
-	C60T Black Glass Liners	50-4259
14	C60 Ultra High Definition Driftwood Log Set	50-3347
-	C60 Black Glass Beads	50-3344
-	C60 Tall IPI LP to NG Fuel Conversion Kit	50-4369
-	C60 Tall IPI NG to LP Fuel Conversion Kit	50-4368
-	C60 Glass Bezel	50-3390
-	C60 Vermiculite (4 Cups)	50-3391
-	Replacement Fuse 3A	50-3289
-	35W Halogen Bulb	50-3291
-	C60T Owners Manual	50-4343
-	C/G Series Power Vent Kit	50-3884
-	12 oz. Can of Matallic Black Touch Up Paint	PAINT-12-MB

Notes

Warranty for Enviro **Gas** Products

Sherwood Industries Ltd. ("Sherwood") hereby warrants, subject to the terms and conditions herein set forth, this product against defects in material and workmanship during the specified warranty period starting from the date of original purchase at retail. In the event of a defect of material or workmanship during the specified warranty period, Sherwood reserves the right to make repairs or to assess the replacement of a defective product at Sherwood's factory. The shipping costs are to be paid by the consumer. All warranties by Sherwood are set forth herein and no claim shall be made against Sherwood on any oral warranty or representation.

Conditions

- A completed warranty registration must be submitted to Sherwood within 90 days of original purchase via the online warranty registration page or via the mail-in warranty registration card provided. Have the installer fill in the installation data sheet in the back of the manual for warranty and future reference.
- This warranty applies only to the original owner in the original location from date of install.
- The unit must have been properly installed by a qualified technician or installer, and must meet all local and national building code requirements.
- The warranty does not cover removal and re-installation costs.
- Sherwood Industries Ltd. reserves the right to make changes without notice.
- Sherwood Industries Ltd. and its employees or representatives will not assume any damages, either directly or indirectly caused by improper usage, operation, installation, servicing or maintenance of this appliance.
- A proof of original purchase must be provided by you or the dealer including serial number.
- This warranty does not cover any discoloration of the safety screen mesh.

Exclusions

An expanded list of exclusions is available at www.enviro.com/help/warranty.html

This warranty does not cover:

- Damage as a result of improper usage or abuse.
- Damage caused from over-firing due to incorrect setup or tampering.
- Damage caused by incorrect installation.

To the Dealer

- Provide name, address and telephone number of purchaser and date of purchase.
- Provide date of purchase. Name of installer and dealer. Serial number of the appliance. Nature of complaint, defects or malfunction, description and part # of any parts replaced.
- Pictures or return of damaged or defective product may be required.

To the Distributor

- Sign and verify that work and information are correct.

Sherwood Industries Ltd.
6782 Oldfield Road, Victoria, BC . Canada V8M 2A3
Online warranty registration: www.enviro.com/warranty/

Category	One Year	Two Year	Limited Lifetime (7yr)
Parts [1,2] (unit serial number required)		✔	
Firebox Liner Panels [3]		✔	
Firebox			✔
Heat Exchanger			✔
Burner			✔
Ceramic Logs [4]			✔
Ceramic Glass [5]	✔		
Pedestal / Legs (excluding finish)			✔
Door Assembly			✔
Surround Panels (excluding finish)			✔
Exterior Panels (excluding finish)			Up to 5 years
Electrical Components		✔	
Exterior Surface Finishing	✔		
Labour	✔		

[1] Whereas warranty has expired, replacement parts will be warrantied for 90 days from part purchase date. Labour not included. Unit serial number required.

[2] 50-173 Westport Fan Kit covered for up to 5 years from purchase date. Labour not included. Unit serial required.

[3] Excluding damage to the finish caused by improper setup of the appliance, or color changes.

[4] Log set and panels excludes wear and tear or breakage caused by cleaning or service.

[4] Glass is covered for thermal breakage. Photos of box, inside of door, and unit serial # must be supplied for breakage due to shipping.

[6] Exterior Surface finishing covers plating, enamel or paint and excludes colour changes, chipping, and fingerprints.

Travel costs not included.

Installation Data Sheet

The following information must be recorded by the installer for warranty purposes and future reference.

NAME OF OWNER:

_____

ADDRESS:

_____

_____

_____

PHONE:_____

NAME OF DEALER:

_____

ADDRESS:

_____

_____

_____

PHONE:_____

MODEL:_____

SERIAL NUMBER:_____

DATE OF PURCHASE: _____ (dd/mm/yyyy)

DATE OF INSTALLATION:_____(dd/mm/yyyy)

☐ NATURAL GAS (NAT) ☐ PROPANE(LPG)

INLET GAS PRESSURE:_____in wc

MAIN BURNER ORIFICE:_____# DMS

PILOT ORIFICE #_____OR_____in diam.

INSTALLER'S SIGNATURE:

_____

NAME OF INSTALLER:

_____

ADDRESS:

_____

_____

_____

PHONE:_____

MANUFACTURED BY:
SHERWOOD INDUSTRIES LTD.
6782 OLDFIELD RD. SAANICHTON, BC, CANADA V8M 2A3
www.enviro.com
September 2025
C-16998