SCAN TO SHOP

Tiziano

OVEN

SPARE PARTS DIAGRAM

LLKTZ7201 - TZ435/1M
LLKTZ7202 - TZ435/2M

CUPPONE

IDENTIFYING YOUR OVEN

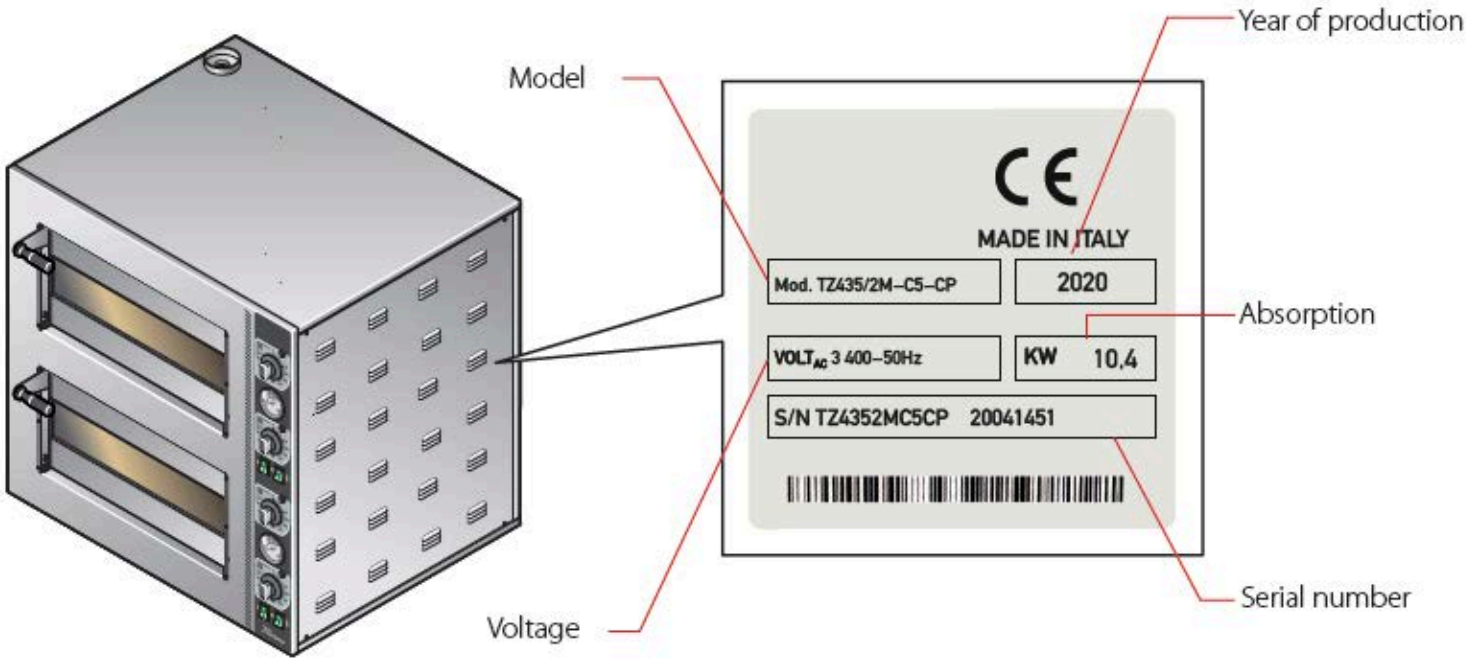

YOUR SERIAL NUMBER IS THE EASIEST WAY TO IDENTIFY YOUR OVEN.
THE FIRST TWO DIGITS REPRESENT THE YEAR AND THE SECOND TWO DIGITS REPRESENT THE MONTH IT WAS PRODUCED.
EG 20041451, THIS OVEN WAS BUILT IN APRIL 2020

TIZIANO'S HAVE EVOLVED OVER THE YEARS, BELOW IS A ROUGH GUIDE ON WHEN INTERNAL ELECTRICS BEGAN TO CHANGE. EACH TYPE OF ELECTRICAL PANEL HAS ITS OWN SECTION IN THIS DIAGRAM.

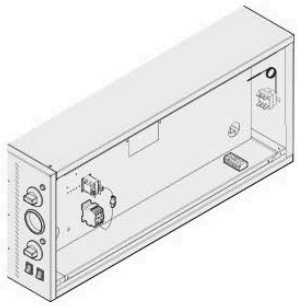

NON REMOVABLE ELECTRICAL PANEL

SEPTEMBER 2015 - AUGUST 2020

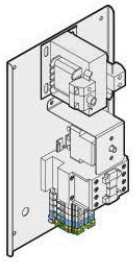

REMOVABLE ELECTRICAL PANEL

SEPTEMBER 2020 - AUGUST 2023

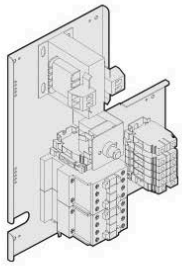

REMOVABLE ELECTRICAL PANEL WITH ELECTROWELDED ELEMENT

SEPTEMBER 2023 & ONWARDS

THE BEST WAY TO ENSURE YOU ARE ORDERING THE CORRECT PART FOR YOUR OVEN IS TO CALL US. WE WILL RUN YOUR SERIAL NUMBER THROUGH OUR SYSTEM AND IDENTIFY THE PART YOU REQUIRE.

0161 696 0052 service@llkpizzapros.co.uk

CUPPONE

SPARE PARTS DIAGRAM

SINGLE DECK
LLKT7201 - TZ435/1M

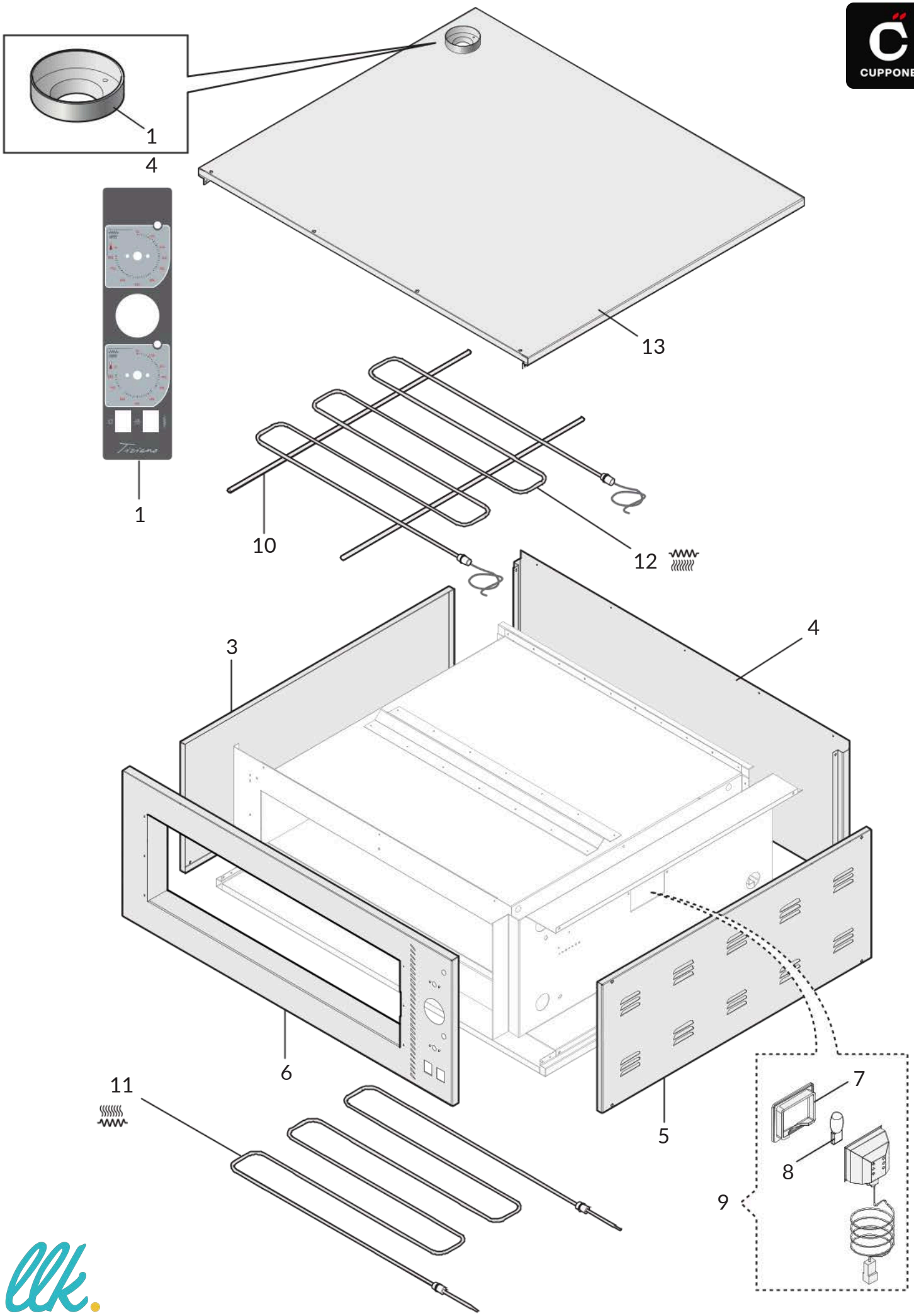

TIZIANO SINGLE DECK	LLKTZ7201 - TZ435/1M	TAB1

PRODUCT CODE	DESCRIPTION	POS
C01.2300	POLYCARBONATE FRONT	1
C01.2306	LEFT PANEL	3
C01.2395	BACK	4
C01.2317	RIGHT PANEL	5
C01.2485	COMPLETE FRONT	6
C01.2331	LAMP GLASS 65X80	7
C01.2332	BULB G4 12V 20W 300°C	8
C01.2333	LAMP HOLDER COMPLETE 65X80 12V G4 ELEMENT	9
C01.2338	SUPPORT BAR	10
C01.2343	LOWER HEATING ELEMENT 230V 2000W	11
C01.2348	UPPER HEATING ELEMENT WITH CABLE 230V 3200W	12
C01.2353	TOP PANEL	13
C01.2354	GALVANISED CHIMNEY RING	14

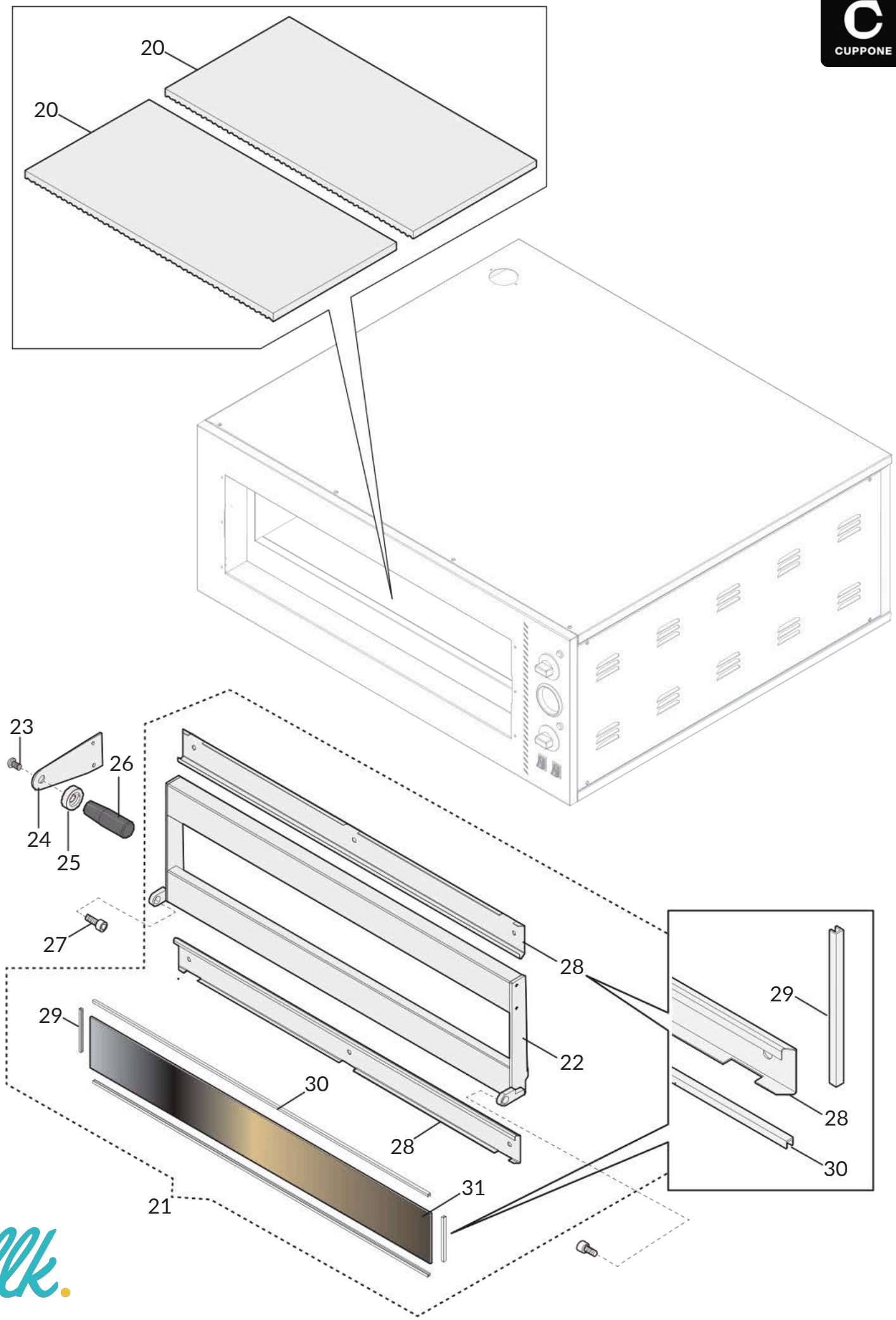

TIZIANO SINGLE DECK	LLKTZ7201 - TZ435/1M	TAB2

PRODUCT CODE	DESCRIPTION	POS
C01.2359	CORDIERITE BRICK 716x358x19 mm	20
C01.2363	COMPLETE DOOR	21
C01.2367	DOOR STRUCTURE	22
C01.3150	TBCE SCREW A2 M12x30	23
C01.2368	DOOR HANDLE	24
C01.3151	WASHER	25
C01.2369	HANDLE	26
C01.2370	TCEI SCREWS M8x16 ZN	27
C01.2374	DOOR GLAZING PROFILE	28
C01.3149	ALLUMINUM GASKET L.95 mm	29
C01.2378	ALLUMINUM GASKET L.709 mm	30
C01.2382	CERAMIC GLASS 726x93 mm	31

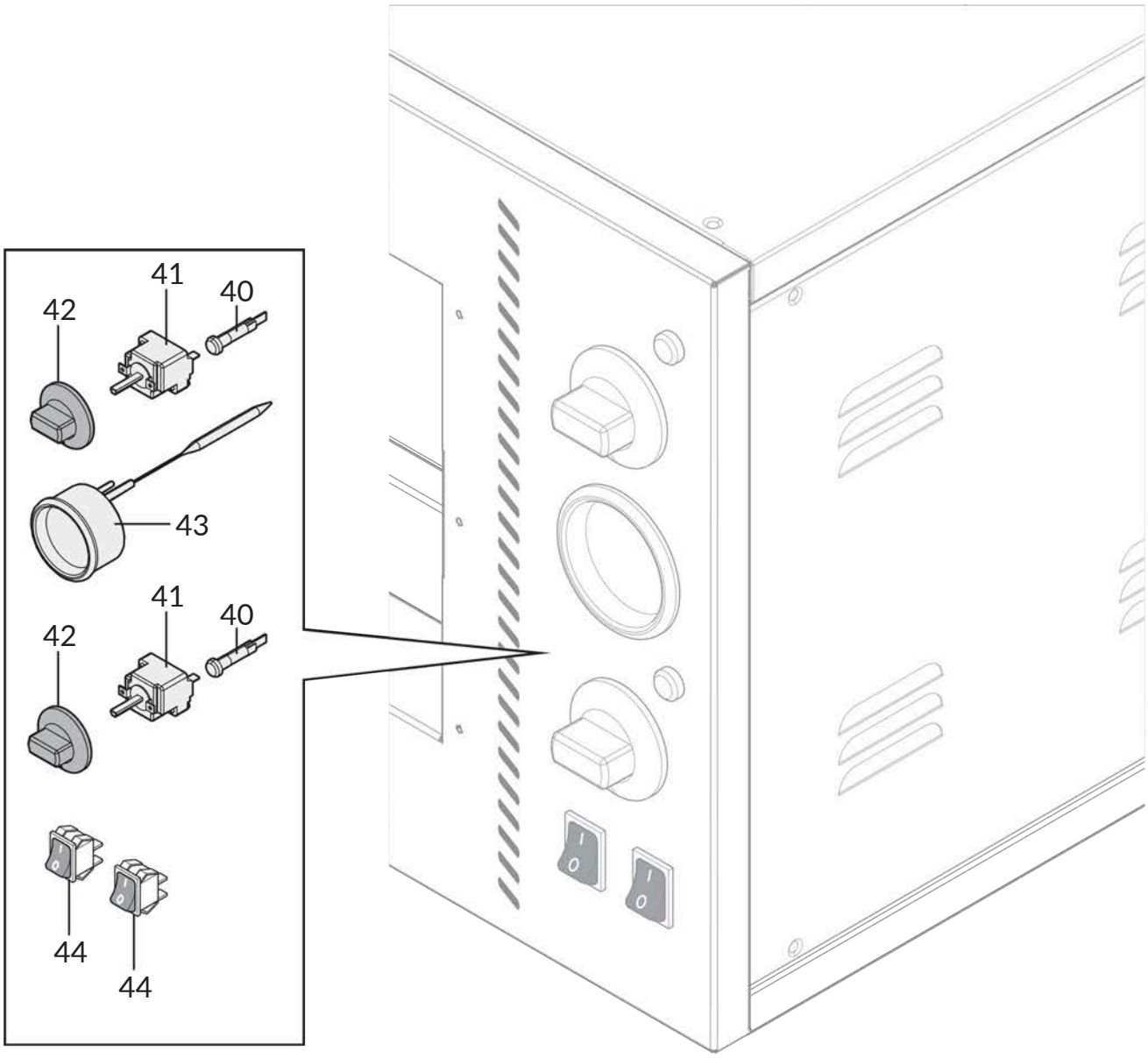
41
40
42
43
41
40
42
44
44

PRODUCT CODE	DESCRIPTION	POS
C01.2400	230V WARNING LIGHT + LENS	40
C01.2384	SINGLE-PHASE THERMOSTAT 450 C	41
C01.2385	BLACK MATTE HANDLE	42
C01.2386	PYROMETER D.60 /°C	43
C01.2387	GREEN SWITCH	44

1-PHASE MODELS ONLY
SEPTEMBER 2023 & ONWARDS
(REMOVABLE ELECTRICAL PANEL WITH ELECTRO-WELDED ELEMENTS)

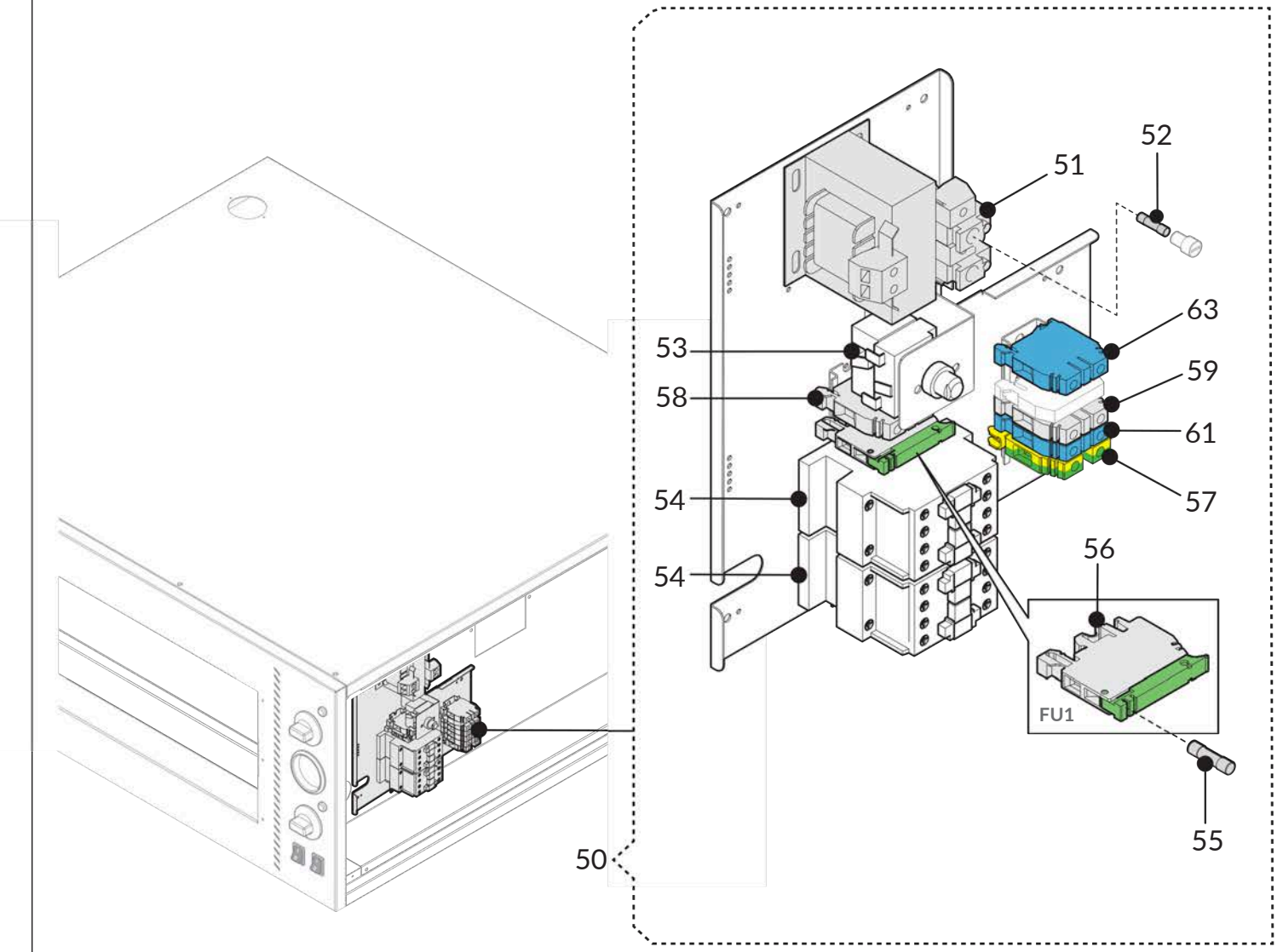

PRODUCT CODE	DESCRIPTION	POS
C01.2247	COMPLETE BRACKET (1PH ONLY)	50
C01.2404	TRANSFORMER 208/12V 25VA	51
C01.3170	FUSE 5x20T 2A	52
C01.1881	SAFETY THERMOSTAT FAIL SAFE 500C (SEPT 2023 & ONWARDS ONLY)	53
C01.2405	4P 9A 230V CONTACTOR (1PH ONLY)	54
C01.3159	FUSE 5x20T 6,3A	55
C01.2406	FUSE HOLDER TERMINAL KIT	56
C01.2242	EARTH CONNECTOR BLOCK/CLAMP 10/35 YELLOW GREEN (1PH ONLY)	57
C01.2237	LIVE CONNECTOR BLOCK/CLAMP GREY 6/35	58
C01.2243	LIVE CONNECTOR BLOCK/CLAMP GREY 10/35 (1PH ONLY)	59
C01.2244	NEUTRAL CONNECTOR BLOCK/CLAMP BLUE 10MMq (1PH ONLY)	61
C01.2240	NEUTRAL CONNECTOR BLOCK/CLAMP BLUE 6MMq	63

1 PHASE MODELS ONLY
SEPTEMBER 2020 - AUGUST 2023
(REMOVABLE ELECTRICAL PANEL)

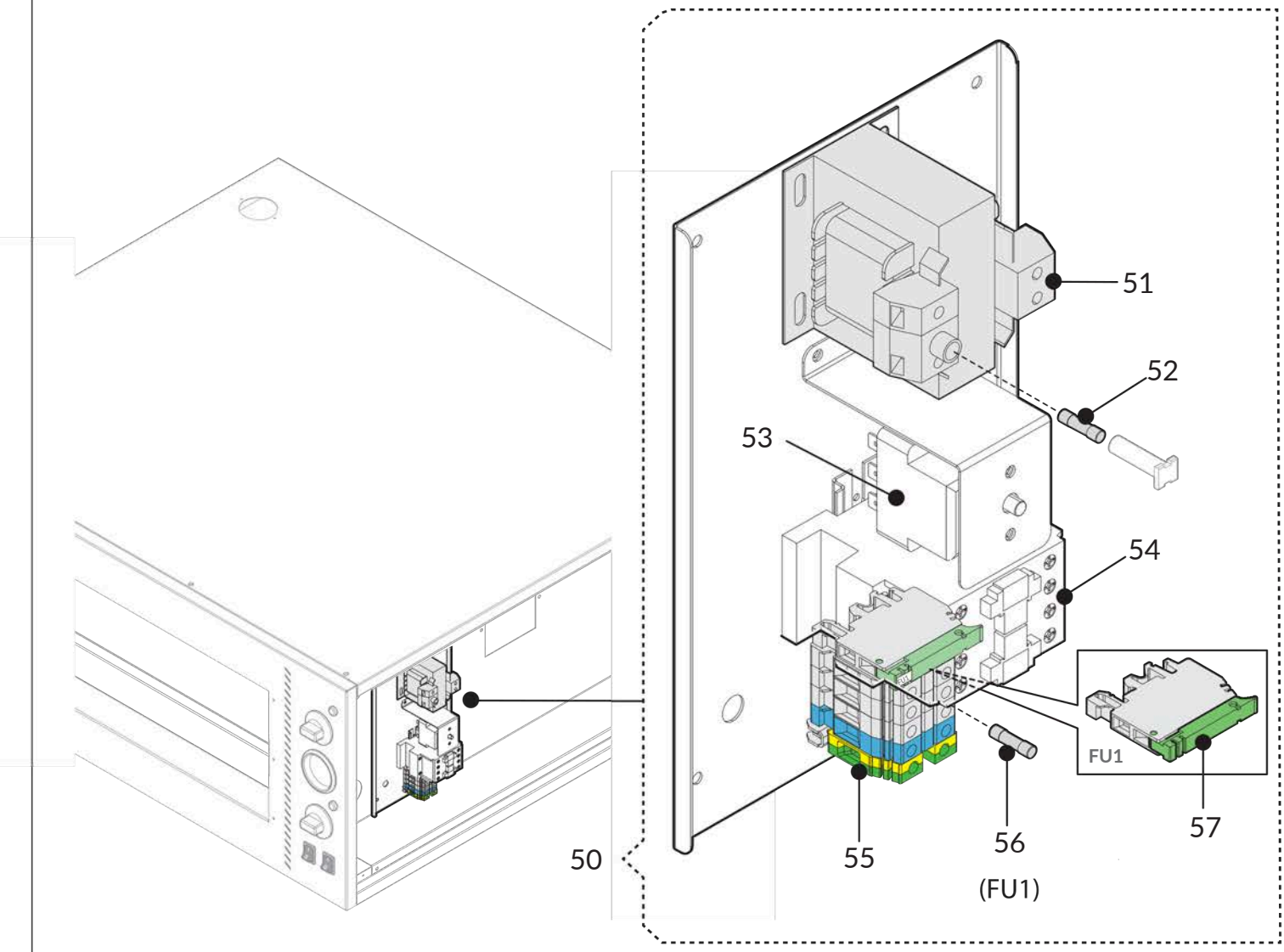

PRODUCT CODE	DESCRIPTION	POS
C01.2249	COMPLETE BRACKET (1PH ONLY)	50
C01.2404	TRANSFORMER 208/12V 25VA	51
C01.3170	FUSE 5x20T 2A	52
C01.2390	THREE-PHASE SAFETY THERMOSTAT	53
C01.2405	4P 9A 230V CONTACTOR (1PH ONLY)	54
C01.3061	SPARE KIT TERMINAL BOARD	55
C01.3159	FUSE 5x20T 6,3A	56
C01.2406	FUSE HOLDER TERMINAL KIT	57

1 PHASE MODELS ONLY
SEPTEMBER 2015 - AUGUST 2020
(NON-REMOVABLE ELECTRICAL PANEL)

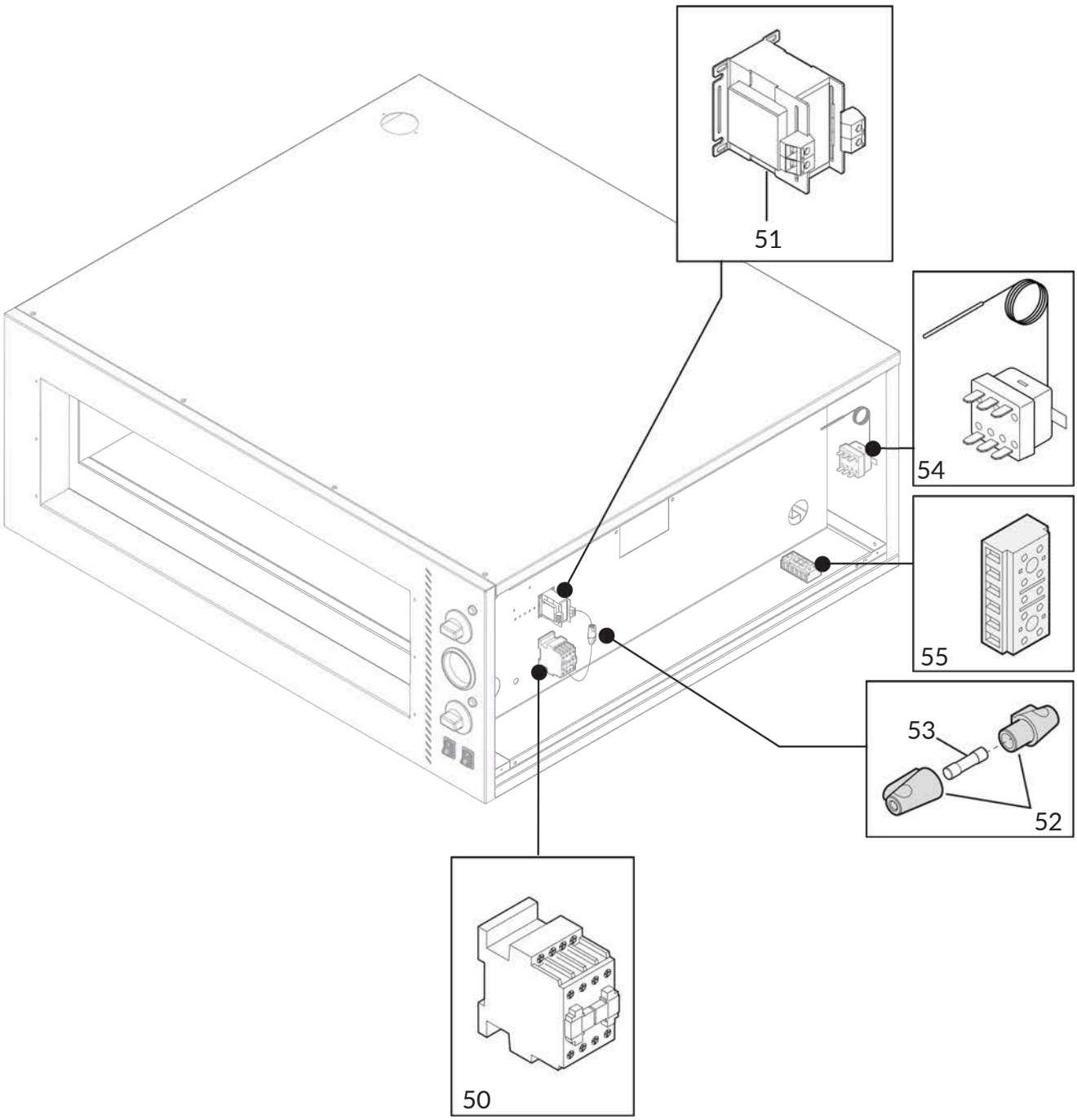

PRODUCT CODE	DESCRIPTION	POS
C01.1877	3P 9A 230V CONTACTOR	50
C01.1875	230-12 50VA TRANSFORMER	51
C01.2388	MOBILE FUSE HOLDER 10A	52
C01.2389	FUSE 5x20T 1A	53
C01.2390	THREE-PHASE SAFETY THERMOSTAT	54
C01.2225	SINGLE-PHASE G10/3 TERMINAL BOARD (1PH ONLY)	55

3 PHASE MODELS ONLY
SEPTEMBER 2023 & ONWARDS
(REMOVABLE ELECTRICAL PANEL WITH ELECTRO-WELDED ELEMENTS)

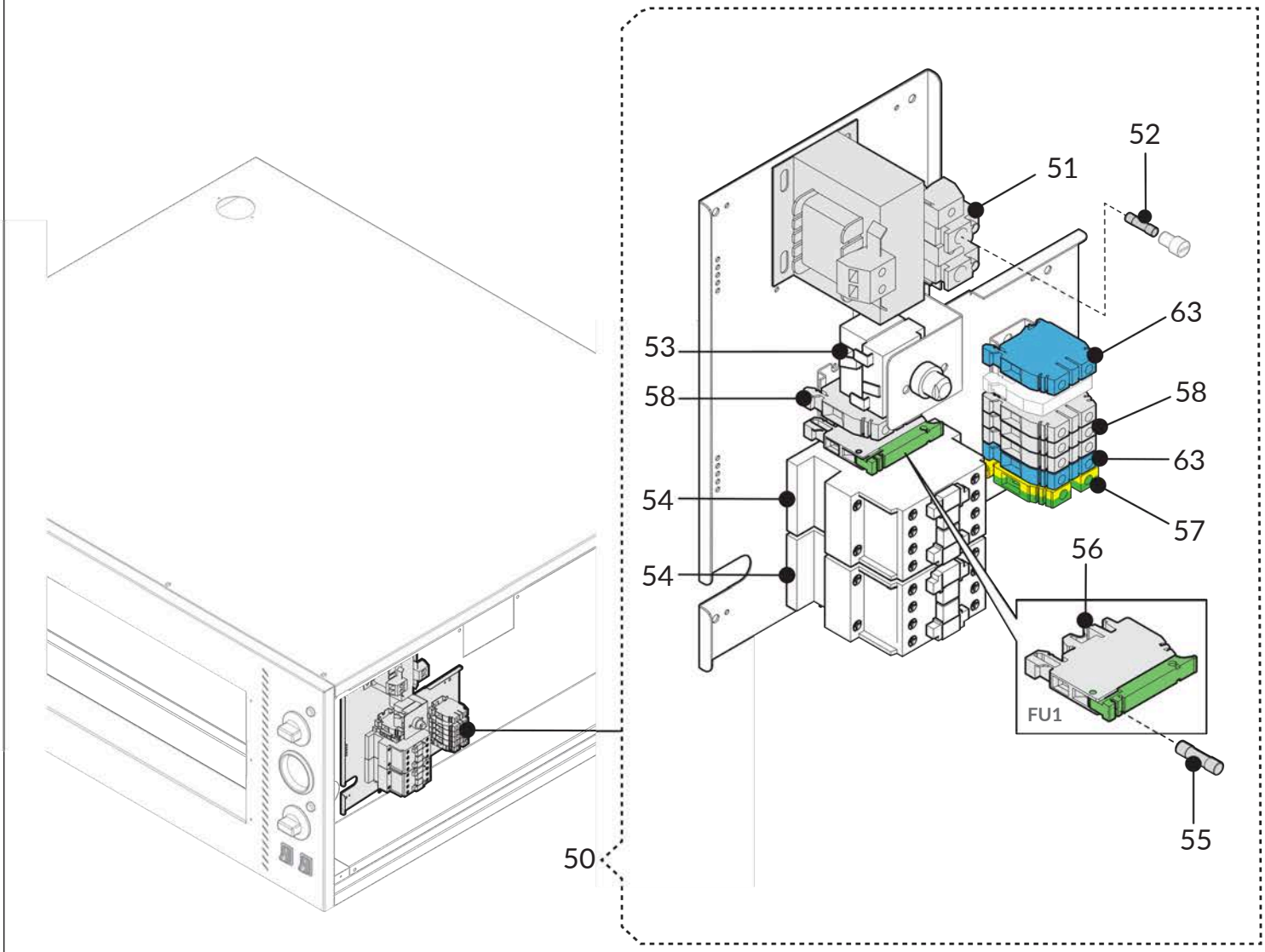

PRODUCT CODE	DESCRIPTION	POS
C01.2245	COMPLETE BRACKET (3PH ONLY)	50
C01.2404	TRANSFORMER 208/12V 25VA (3PH ONLY)	51
C01.3170	FUSE 5x20T 2A	52
C01.1881	SAFETY THERMOSTAT FAIL SAFE 500C (SEPT 2023 & ONWARDS)	53
C01.1877	3P 9A 230V CONTACTOR	54
C01.3159	FUSE 5x20T 6,3A	55
C01.2406	FUSE HOLDER TERMINAL KIT	56
C01.2246	EARTH CONNECTOR BLOCK/CLAMP 6MMq YELLOW GREEN (3PH ONLY)	57
C01.2237	LIVE CONNECTOR BLOCK/CLAMP GREY 6/35	58
C01.2240	NEUTRAL CONNECTOR BLOCK/CLAMP BLUE 6MMq	63

3 PHASE MODELS ONLY
SEPTEMBER 2020 - AUGUST 2023
(REMOVABLE ELECTRICAL PANEL)

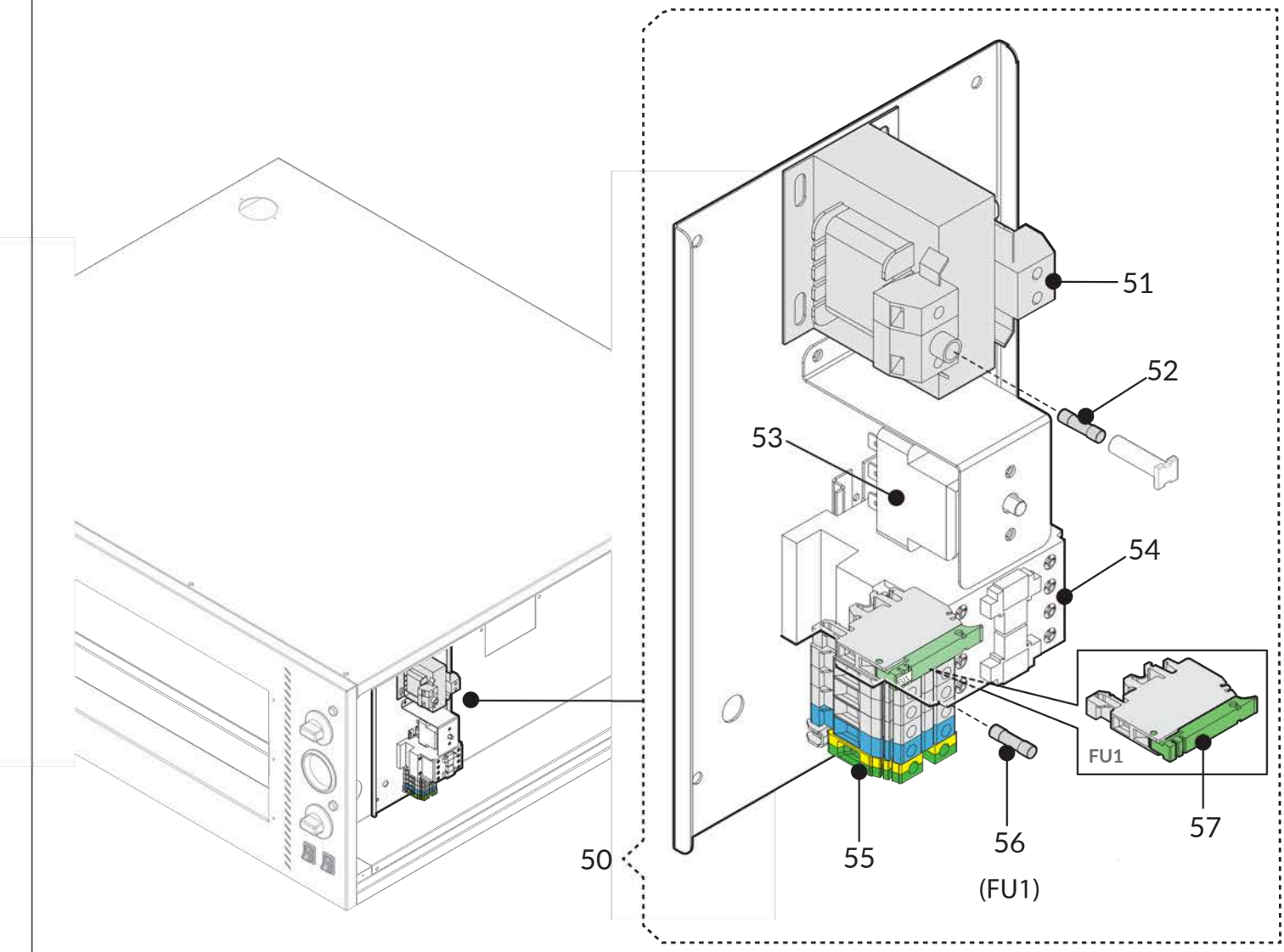

PRODUCT CODE	DESCRIPTION	POS
C01.2248	COMPLETE BRACKET (3PH ONLY)	50
C01.2404	TRANSFORMER 208/12V 25VA	51
C01.3170	FUSE 5x20T 2A	52
C01.2390	THREE-PHASE SAFETY THERMOSTAT	53
C01.2227	3P 9A 230V CONTACTOR (3PH ONLY)	54
C01.3061	SPARE KIT TERMINAL BOARD - EARTH, LIVE, NEUTRAL	55
C01.3159	FUSE 5x20T 6,3A	56
C01.2406	FUSE HOLDER TERMINAL KIT	57

3 PHASE MODELS ONLY
SEPTEMBER 2015 - AUGUST 2020
(REMOVABLE ELECTRICAL PANEL WITH ELECTRO-WELDED ELEMENTS)

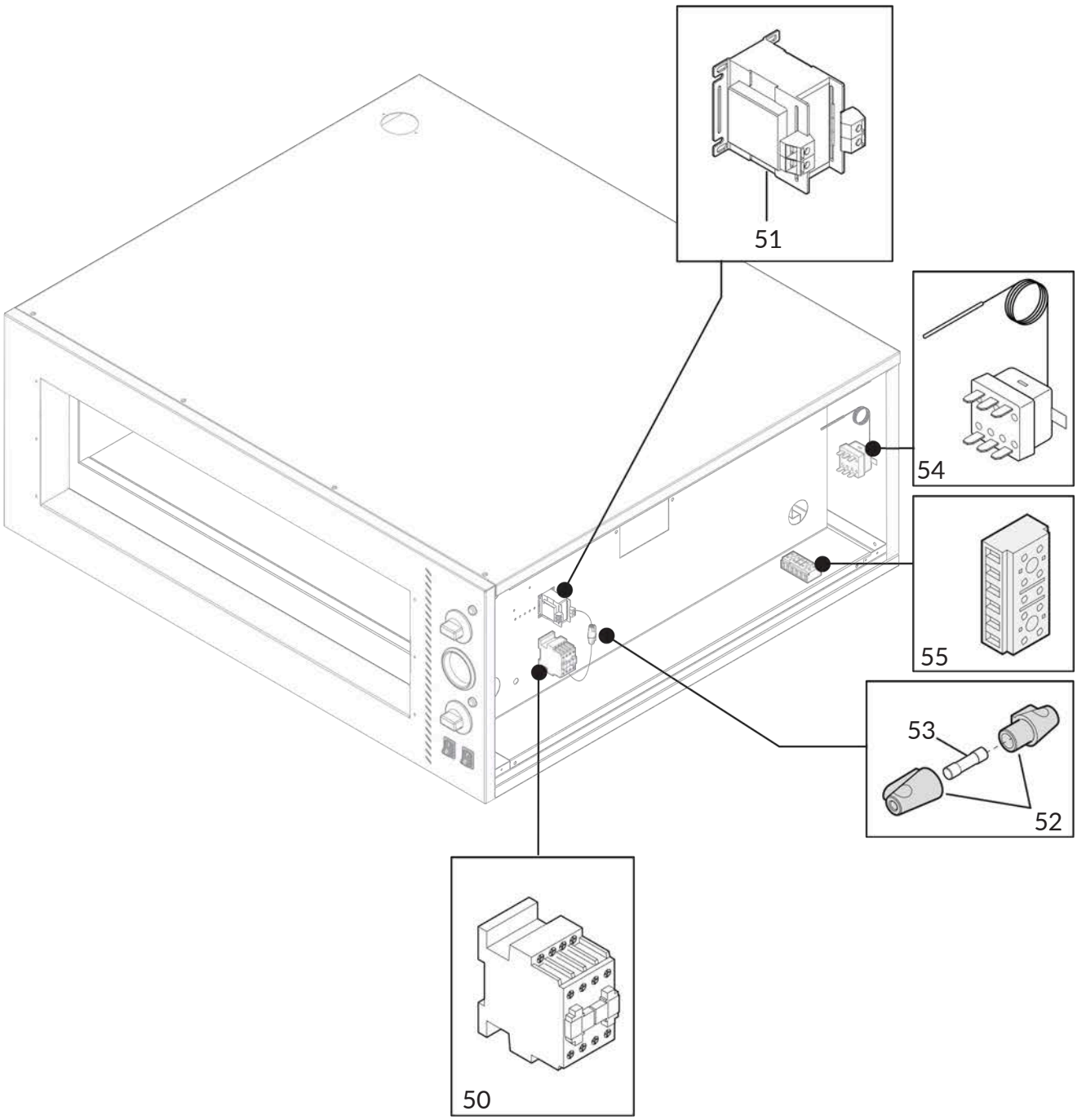

PRODUCT CODE	DESCRIPTION	POS
C01.1877	3P 9A 230V CONTACTOR	50
C01.1875	230-12 50VA TRANSFORMER	51
C01.2388	MOBILE FUSE HOLDER 10A	52
C01.2389	FUSE 5x20T 1A	53
C01.2390	THREE-PHASE SAFETY THERMOSTAT	54
C01.2224	THREE-PHASE G10/5 TERMINAL BOARD (3PH ONLY)	55

CUPPONE

SPARE PARTS DIAGRAM

TWIN DECK
LLKTZ7202 - TZ435/2M

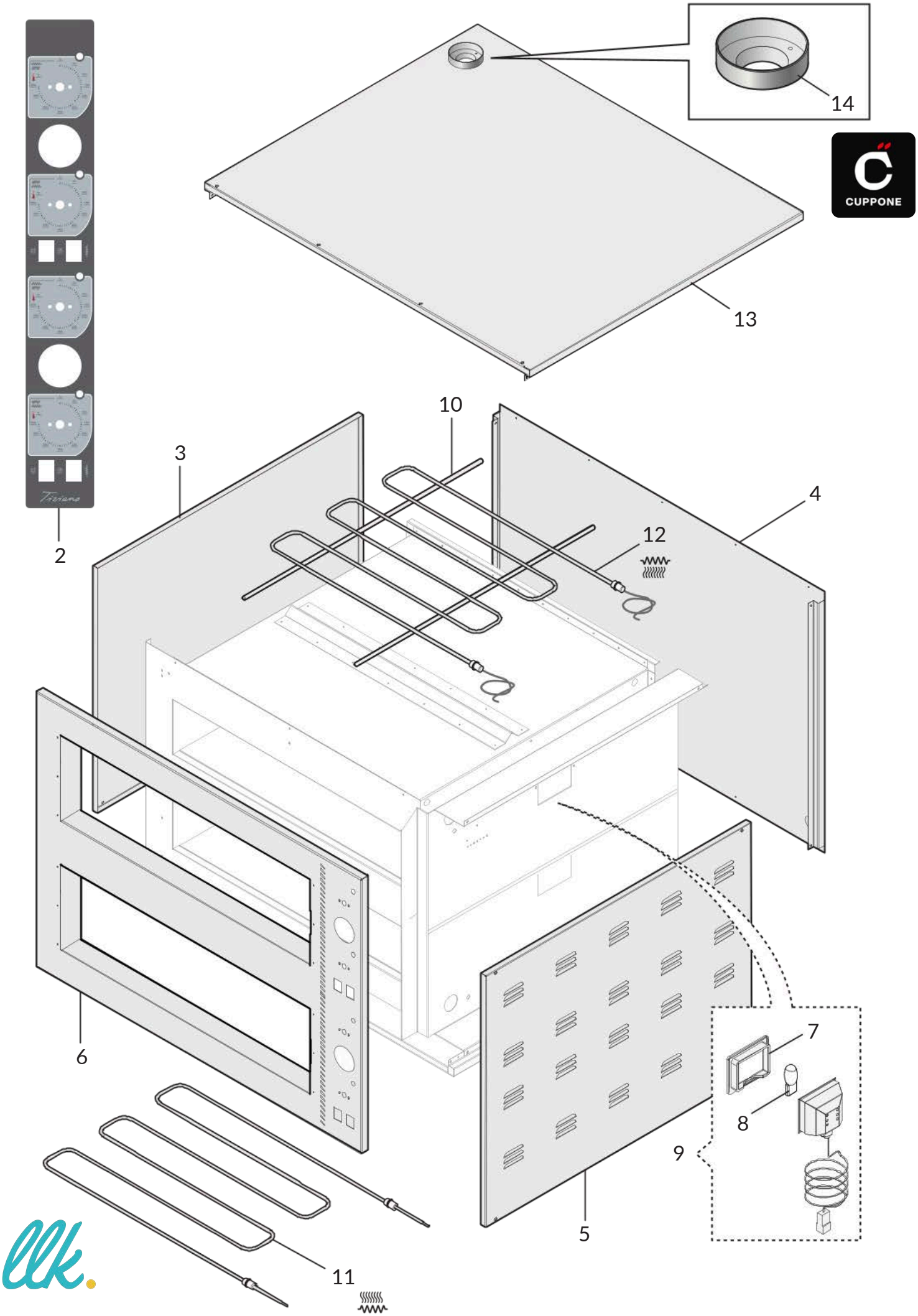

TIZIANO TWIN DECK	LLKTZ7202 / TZ435/2M	TAB5

PRODUCT CODE	DESCRIPTION	POS
C01.2301	POLYCARBONATE FRONT	2
C01.2311	LEFT PANEL	3
C01.2399	BACK PANEL	4
C01.2322	RIGHT PANEL	5
C01.2330	COMPLETE FRONT	6
C01.2331	BULB HOLDER GLASS 65X80	7
C01.2332	BULB G4 12V 20W 300°C	8
C01.2333	LAMP HOLDER BJB 65X80 12V G4 COMPLETE	9
C01.2338	ELEMENT SUPPORT BAR	10
C01.2343	LOWER HEATING ELEMENT 230V 2000W	11
C01.2348	UPPER HEATING ELEMENT WITH CABLE 230V 3200W	12
C01.2353	TOP PANEL	13
C01.2354	GALVANISED CHIMNEY RING	14

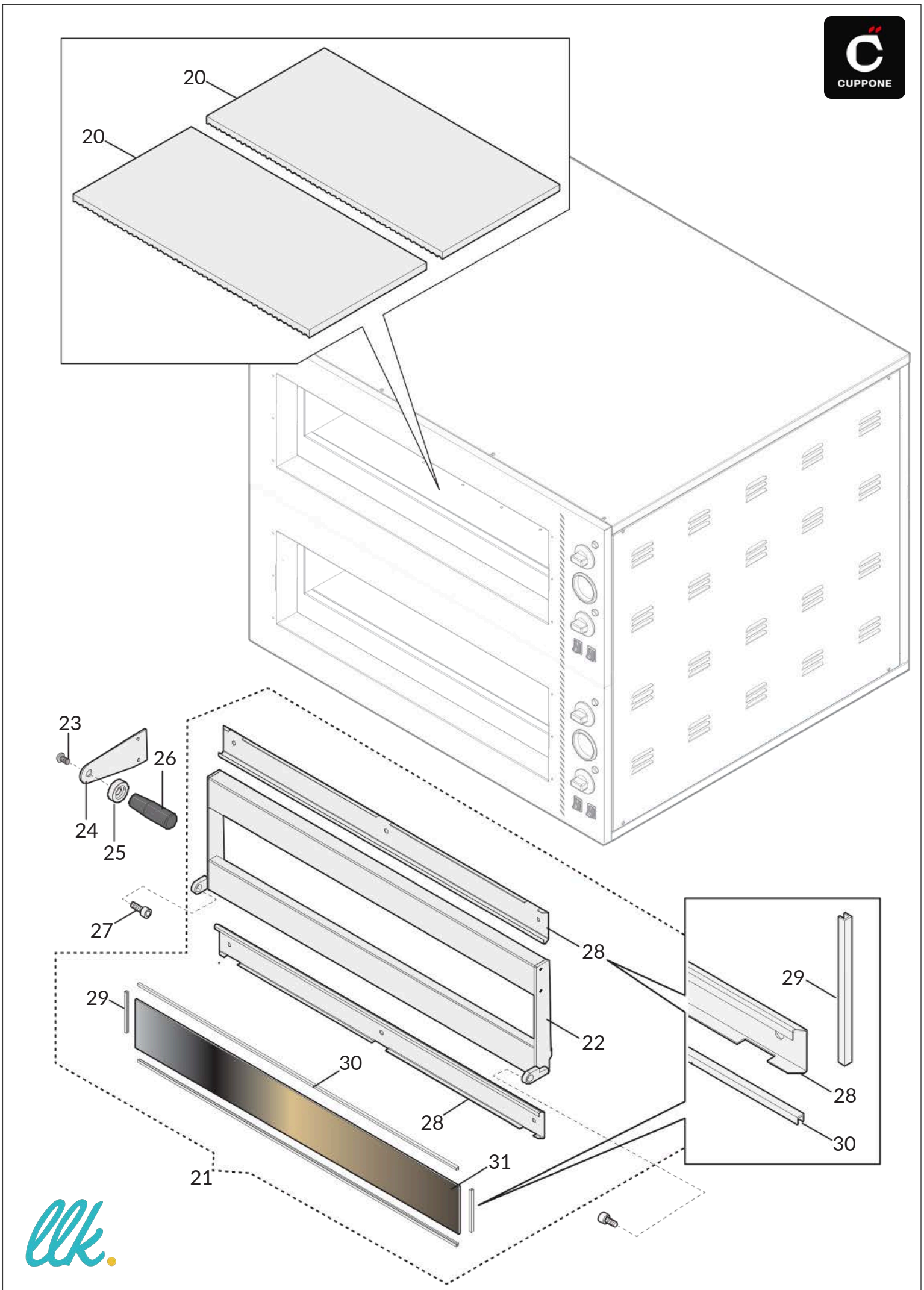

TIZIANO TWIN DECK	LLKTZ7202 / TZ435/2M	TAB6

PRODUCT CODE	DESCRIPTION	POS
C01.2359	CORDIERITE BRICK 716x358x19 mm	20
C01.2363	COMPLETE DOOR	21
C01.2367	DOOR STRUCTURE	22
C01.3150	DOOR HANDLE BOLT A2 M12x30	23
C01.2368	DOOR HANDLE BRACKET	24
C01.3151	WASHER	25
C01.2369	DOOR HANDLE	26
C01.2370	TCEI SCREWS M8x16 ZN	27
C01.2374	DOOR GLAZING PROFILE	28
C01.3149	ALLUMINUM GASKET L.95 mm	29
C01.2378	ALLUMINUM GASKET L.709 mm	30
C01.2382	CERAMIC GLASS 726x93 mm	31

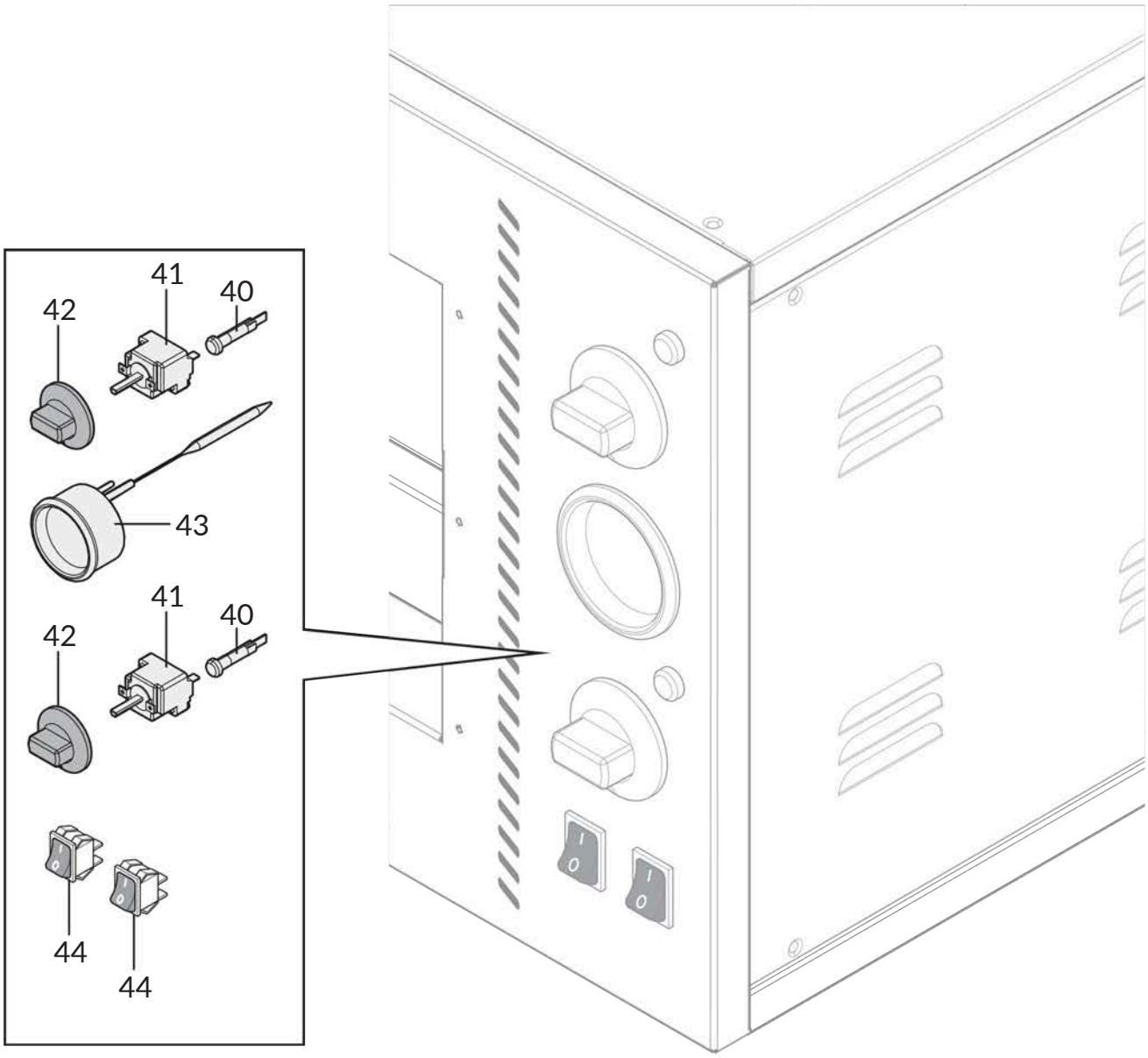
42
41
40
43
42
41
40
44
44

PRODUCT CODE	DESCRIPTION	POS
C01.2400	230V WARNING LAMP + LIGHT LENS	40
C01.2384	SINGLE-PHASE THERMOSTAT 450 C	41
C01.2385	BLACK MATTE THERMOSTAT KNOB	42
C01.2386	PYROMETER D.60 /°C	43
C01.2387	GREEN SWITCH	44

1PHASE MODELS ONLY
SEPTEMBER 2023 & ONWARDS
(REMOVABLE ELECTRICAL PANEL WITH ELECTRO-WELDED ELEMENTS)

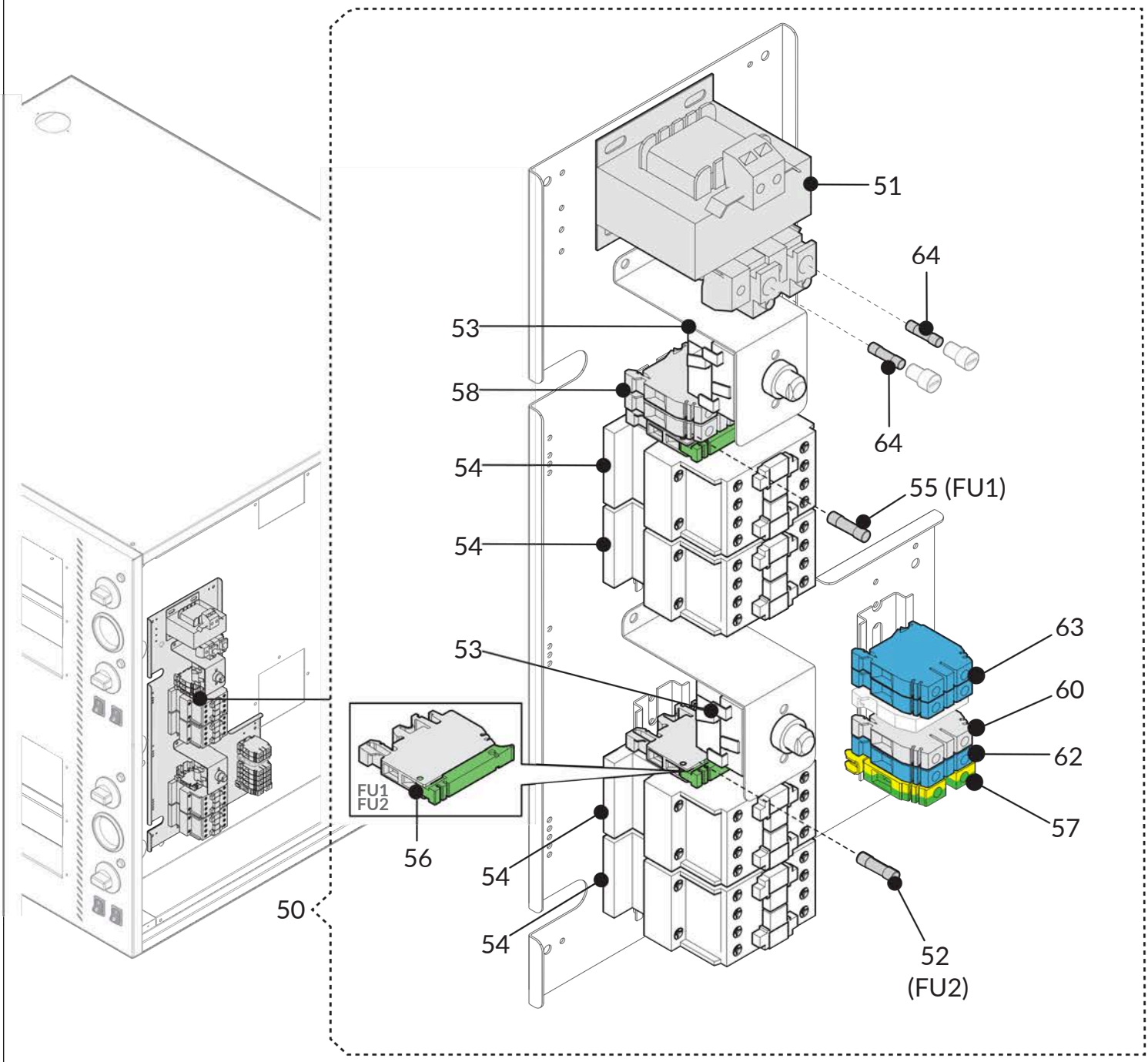

PRODUCT CODE	DESCRIPTION	POS
C01.2235	COMPLETE BRACKET (1PH ONLY)	50
C01.1875	230-12 50VA TRANSFORMER	51
C01.3170	FUSE 5x20T 2A	52
C01.1881	SAFETY THERMOSTAT (FAIL SAFE 500C)	53
C01.2405	4P 9A 230V CONTACTOR (1PH ONLY)	54
C01.3159	FUSE 5x20T 6,3A	55
C01.2406	FUSE HOLDER TERMINAL KIT	56
C01.2336	EARTH CONNECTOR BLOCK/CLAMP 16MMq YELLOW GREEN (1PH ONLY)	57
C01.2237	LIVE CONNECTOR BLOCK/CLAMP GREY 6/35	58
C01.2238	LIVE CONNECTOR BLOCK/CLAMP GREY 16MMq (1PH ONLY)	60
C01.2239	NEUTRAL CONNECTOR BLOCK/CLAMP BLUE 16MMq (1PH ONLY)	62
C01.2240	NEUTRAL CONNECTOR BLOCK/CLAMP BLUE 6MMq	63
C01.3158	FUSE 5x20T 2,5A	64

1PHASE MODELS ONLY
SEPTEMBER 2020 & AUGUST 2023
(REMOVABLE ELECTRICAL PANEL)

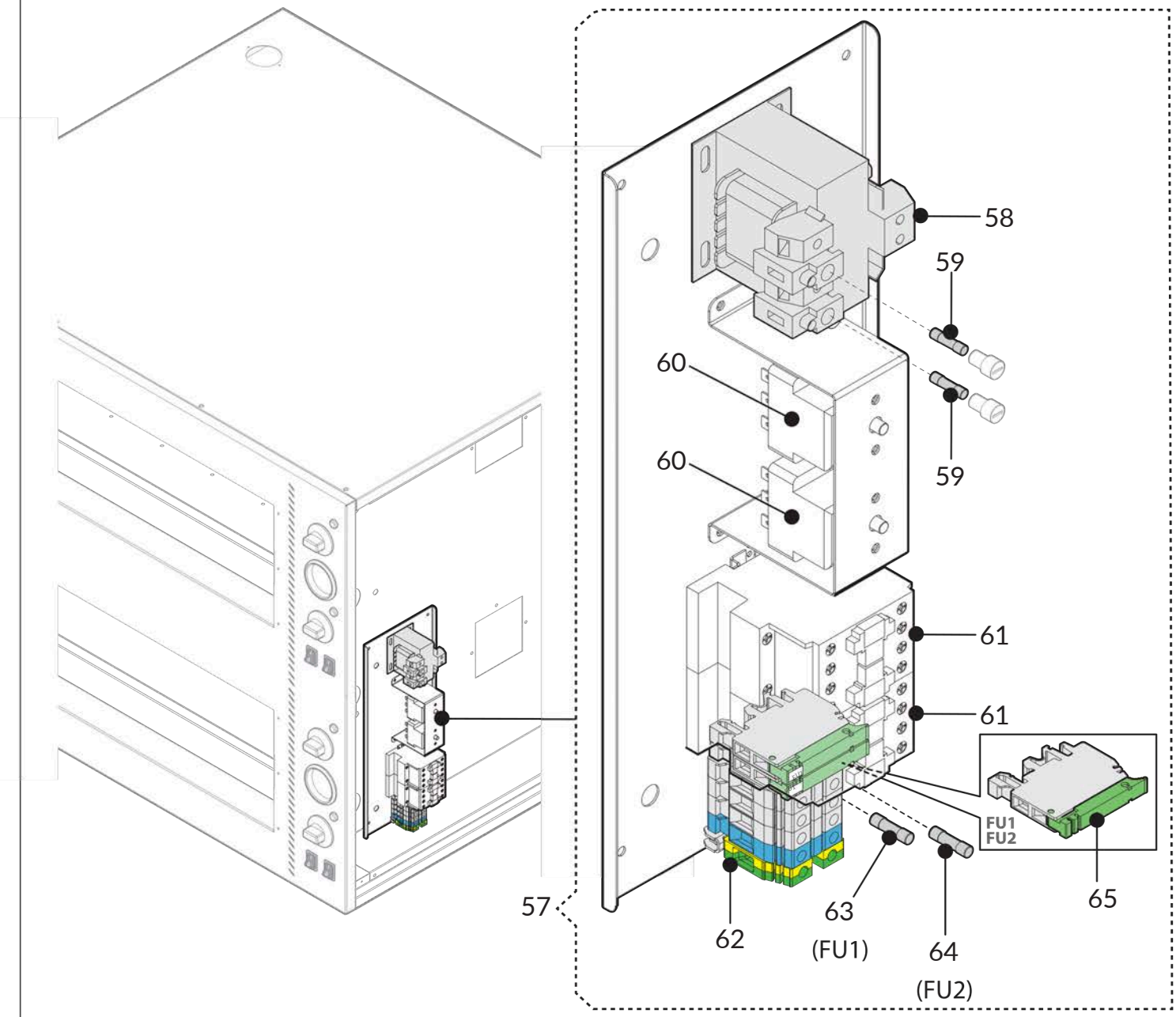

PRODUCT CODE	DESCRIPTION	POS
C01.2250	COMPLETE BRACKET (1PH ONLY)	57
C01.1875	230-12 50VA TRANSFORMER	58
C01.3158	FUSE 5x20T 2,5A	59
C01.2390	THREE-PHASE SAFETY THERMOSTAT	60
C01.2405	4P 9A 230V CONTACTOR (1PH ONLY)	61
C01.3061	SPARE KIT TERMINAL BOARD	62
C01.3159	FUSE 5x20T 6,3A	63
C01.3170	FUSE 5x20T 2A	64
C01.2406	FUSE HOLDER TERMINAL KIT	65

1PHASE MODELS ONLY
SEPTEMBER 2015 & AUGUST 2020
(NON-REMOVABLE ELECTRICAL PANEL)

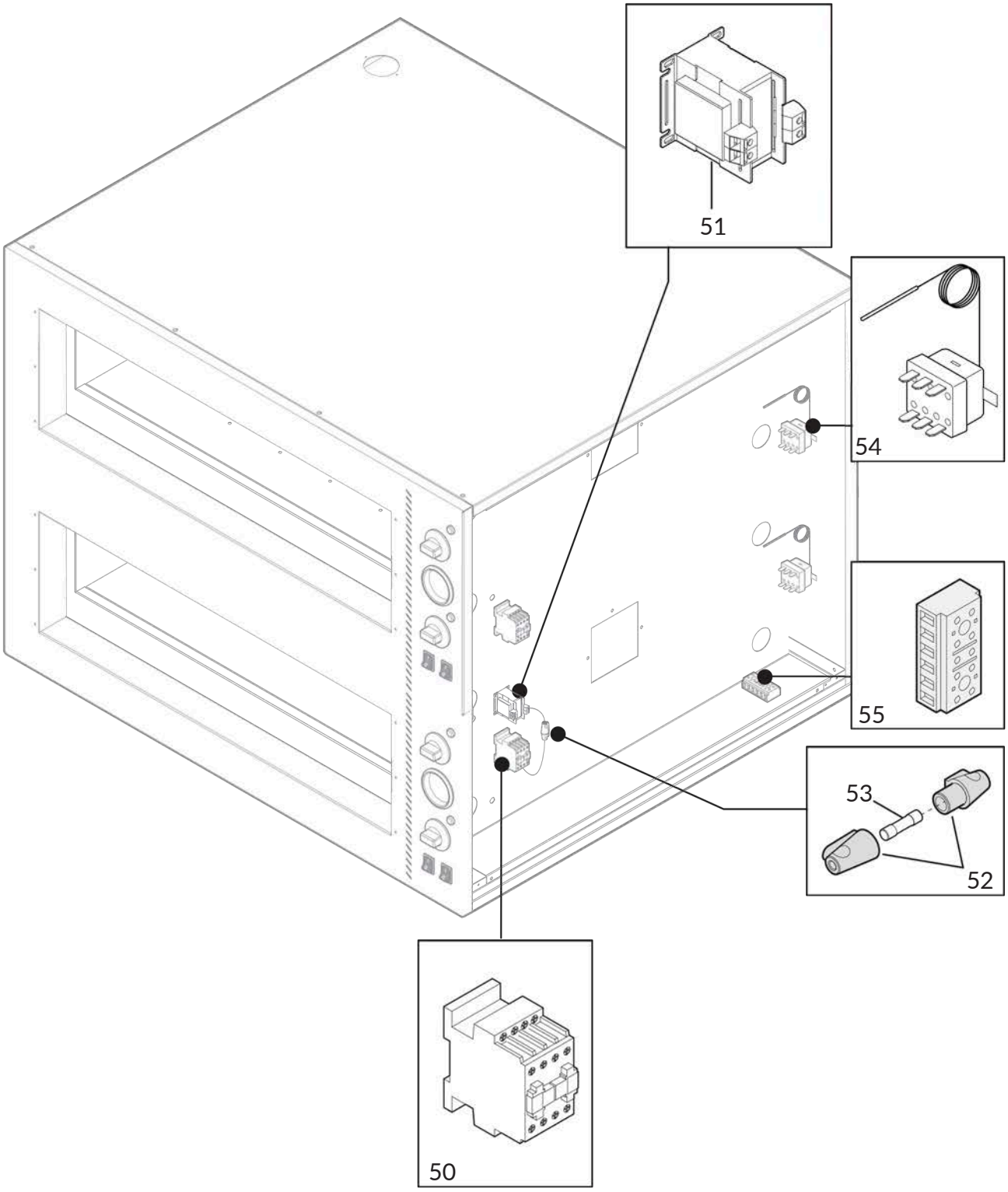

PRODUCT CODE	DESCRIPTION	POS
C01.1877	3P 9A 230V CONTACTOR	50
C01.1875	230-12 50VA TRANSFORMER	51
C01.2388	MOBILE FUSE HOLDER 10A	52
C01.2389	FUSE 5x20T 1A	53
C01.2390	THREE-PHASE SAFETY THERMOSTAT	54
C01.2225	SINGLE-PHASE G10/3 TERMINAL BOARD (1PH ONLY)	55

3 PHASE MODELS ONLY
SEPTEMBER 2023 & ONWARDS
(REMOVABLE ELECTRICAL PANEL WITH ELECTRO-WELDED ELEMENTS)

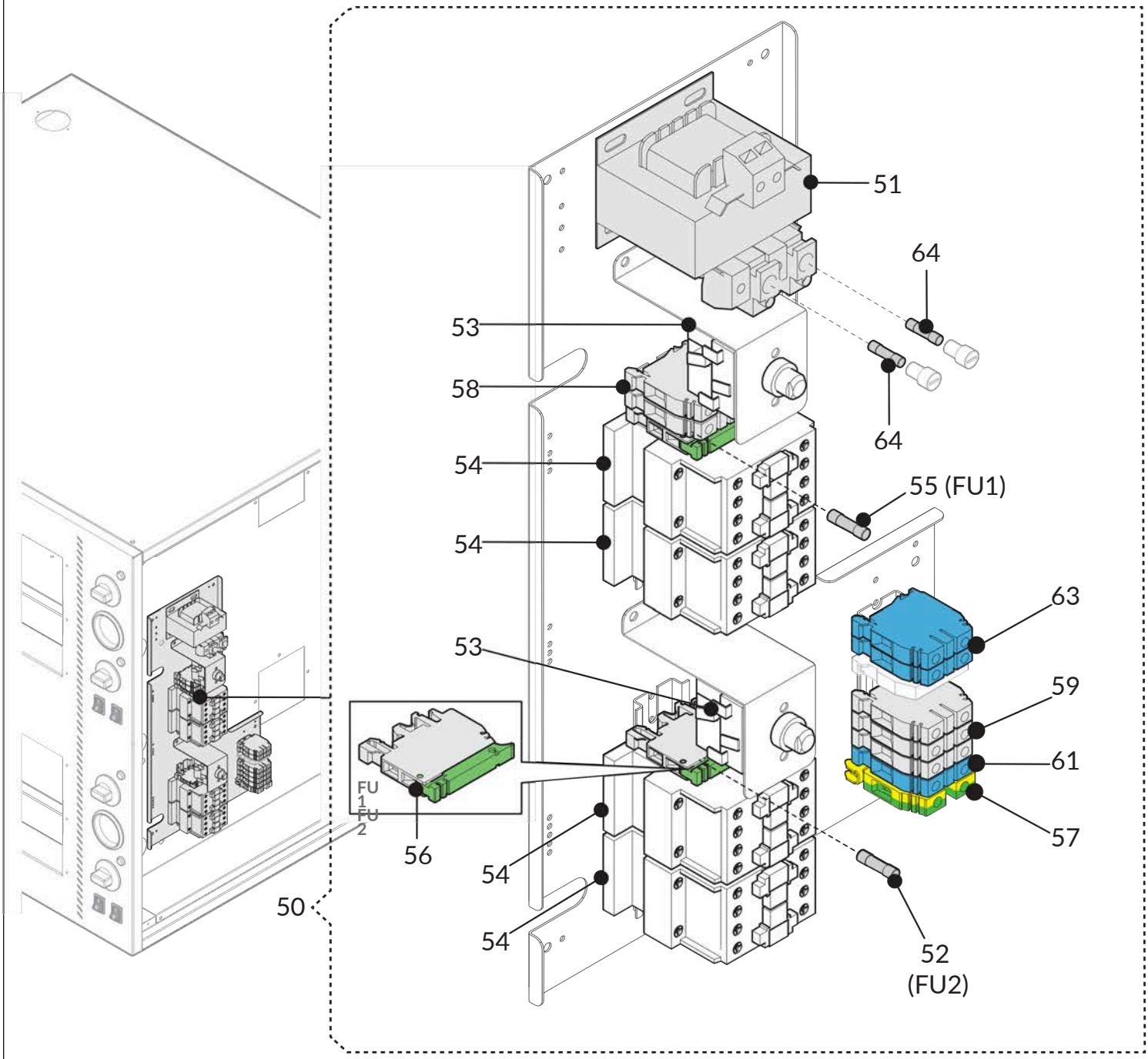

PRODUCT CODE	DESCRIPTION	POS
C01.2241	COMPLETE BRACKET (3PH ONLY)	50
C01.1875	TRANSFORMER 230-12 50VA	51
C01.3170	FUSE 5x20T 2A	52
C01.1881	SAFETY THERMOSTAT (FAIL SAFE 500C)	53
C01.1877	3P 9A 230V CONTACTOR (3PH ONLY)	54
C01.3159	FUSE 5x20T 6,3A	55
C01.2406	FUSE HOLDER TERMINAL KIT	56
C01.2242	EARTH CONNECTOR BLOCK/CLAMP 10/35 YELLOW GREEN (3PH ONLY)	57
C01.2237	LIVE CONNECTOR BLOCK/CLAMP GREY 6/35	58
C01.2243	GREY CLAMP 10/35 (3PH ONLY)	59
C01.2244	BLUE CLAMP 10MMq (3PH ONLY)	61
C01.2240	BLUE CLAMP 6MMq	63
C01.3158	FUSE 5x20T 2,5A	64

3 PHASE MODELS ONLY
SEPTEMBER 2020 & AUGUST 2023
(REMOVABLE ELECTRICAL PANEL)

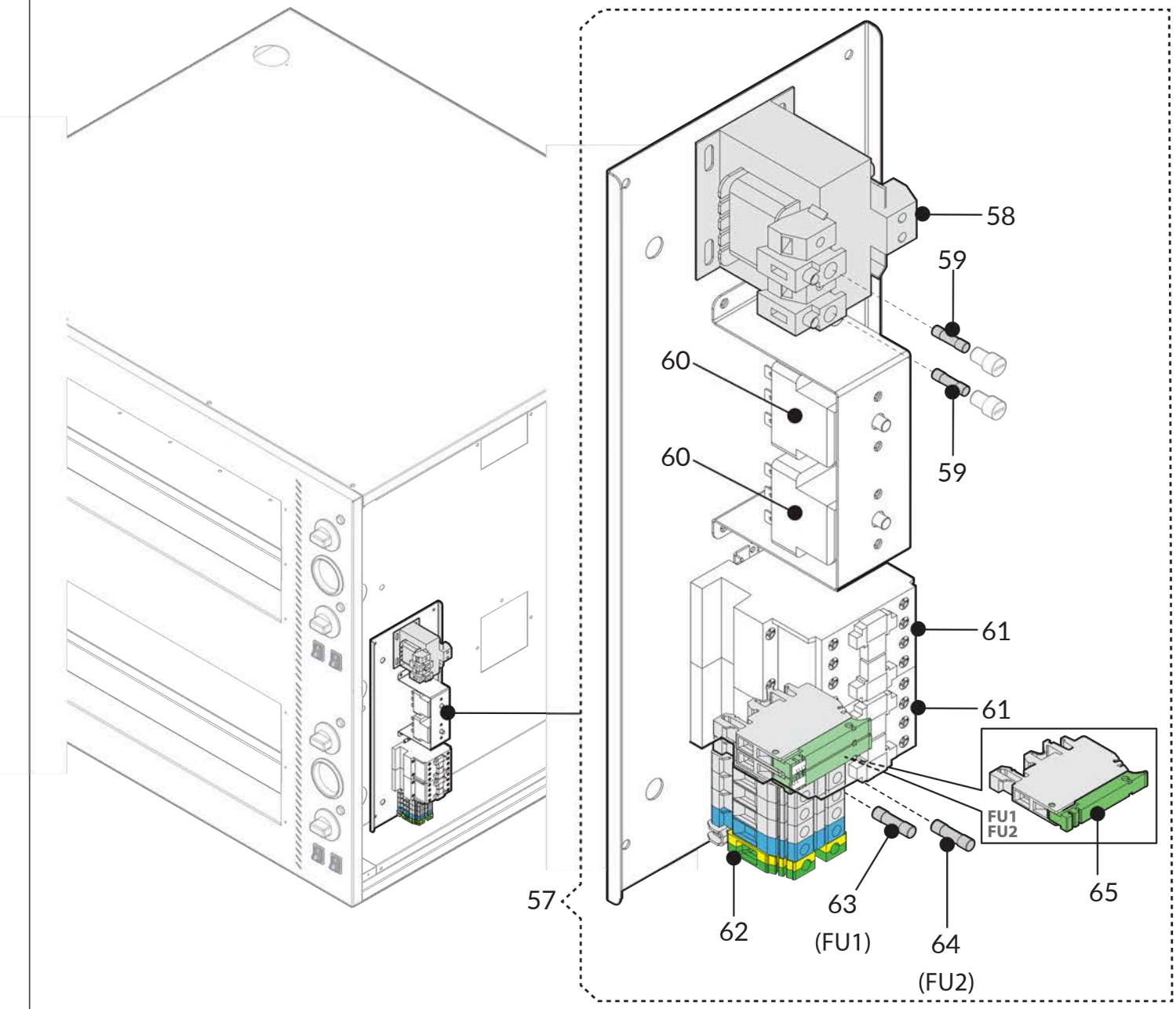

PRODUCT CODE	DESCRIPTION	POS
C01.2251	COMPLETE BRACKET (3PH ONLY)	57
C01.1875	230-12 50VA TRANSFORMER	58
C01.3158	FUSE 5x20T 2,5A	59
C01.2390	THREE-PHASE SAFETY THERMOSTAT	60
C01.1877	3P 9A 230V CONTACTOR (3PH ONLY)	61
C01.3061	SPARE KIT TERMINAL BOARD	62
C01.3159	FUSE 5x20T 6,3A	63
C01.3170	FUSE 5x20T 2A	64
C01.2406	FUSE HOLDER TERMINAL KIT	65

3 PHASE MODELS ONLY
SEPTEMBER 2015 - AUGUST 2020
(NON-REMOVABLE ELECTRICAL PANEL)

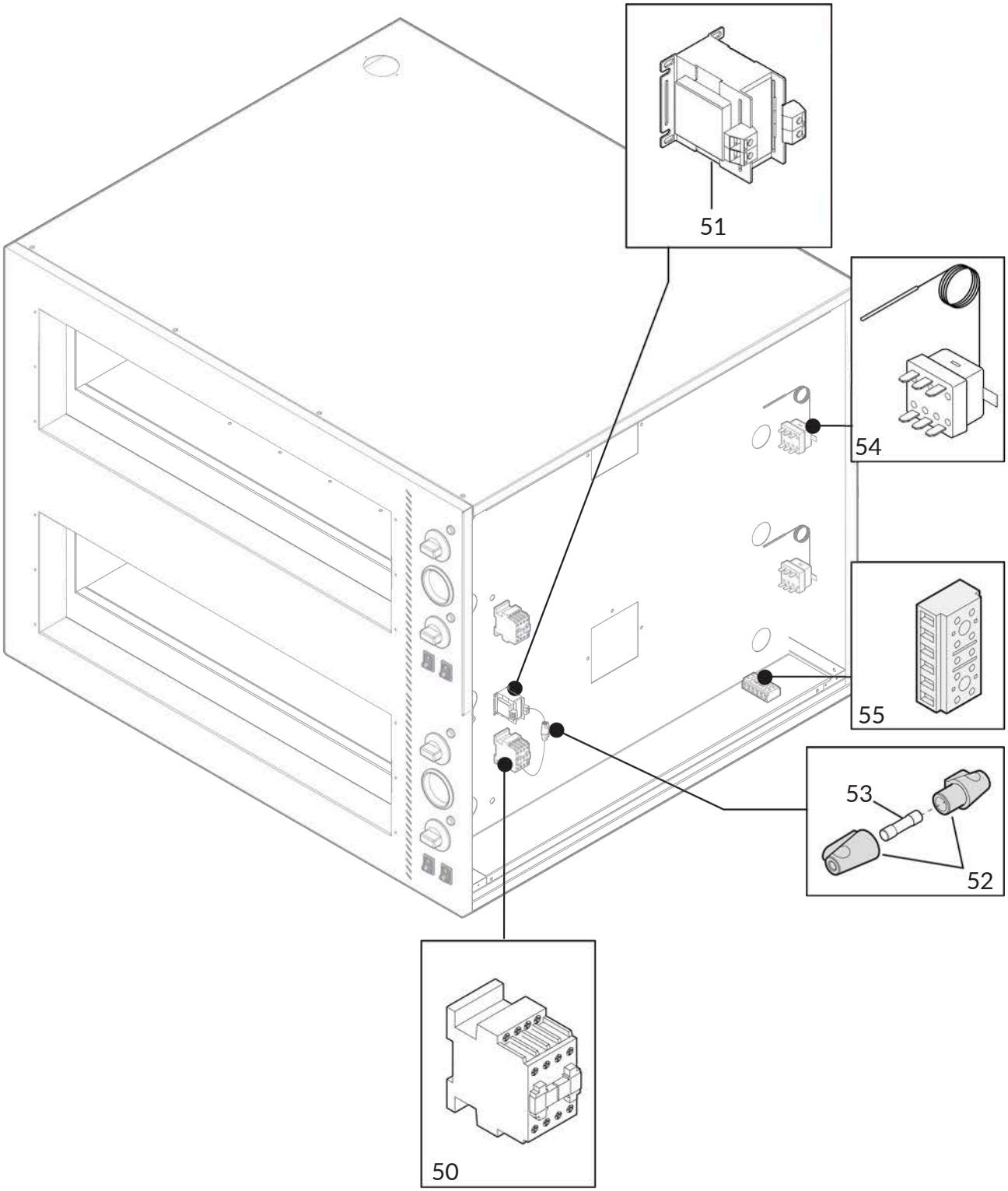

PRODUCT CODE	DESCRIPTION	POS
C01.1877	3P 9A 230V CONTACTOR	50
C01.1875	230-12 50VA TRANSFORMER	51
C01.2388	MOBILE FUSE HOLDER 10A	52
C01.2389	FUSE 5x20T 1A	53
C01.2390	THREE-PHASE SAFETY THERMOSTAT	54
C01.2224	THREE-PHASE G10/5 TERMINAL BOARD (3PH ONLY)	55