REV.	ZONE	DESCRIPTIONS	DWN BY	DATE

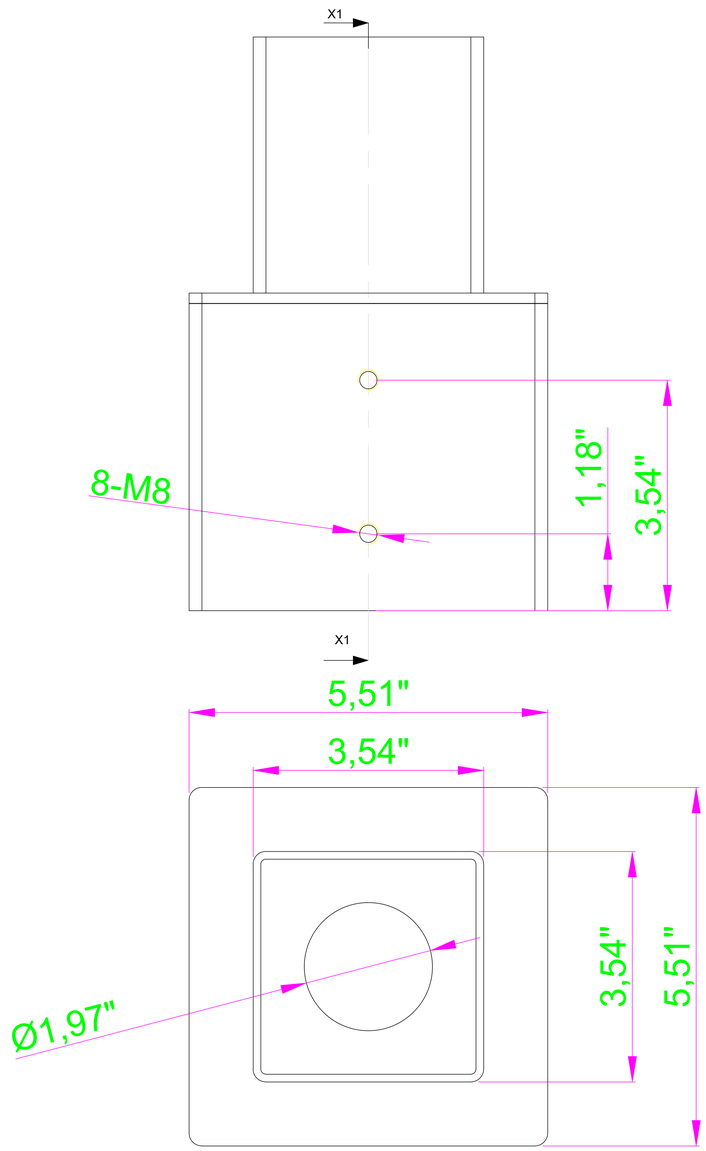

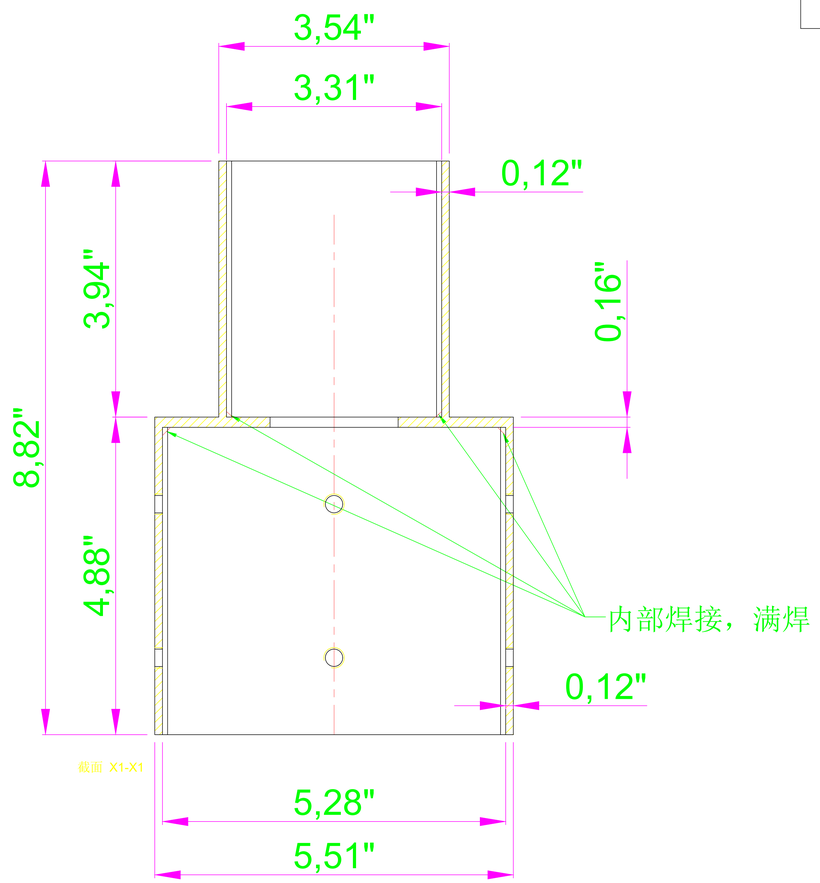

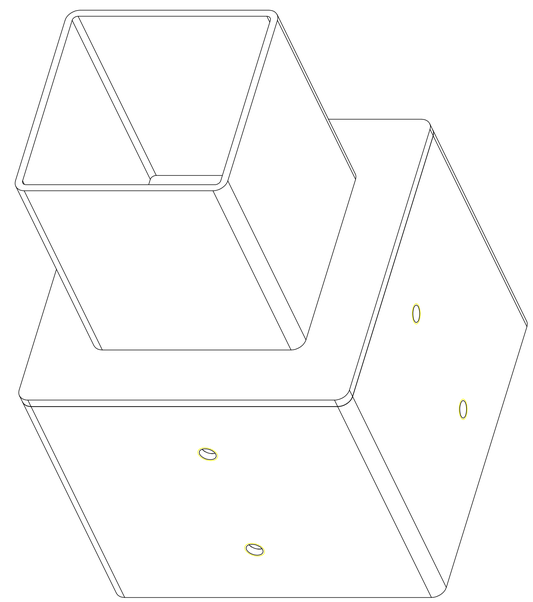

Net weight:2.3Kg

DO NOT SCALE DRAWING							PROJECTION	JS LED®		
TOLERANCE ALL DIM. ARE IN:mm							MODEL: SZ-5S-4S1		DATE:	
(±)	0 <~< 3	3 <~< 6	6 <~< 30	30 <~< 120	120 <~< 315	315 < 1000	PART NAME: Bracket		S-PATH:	
							CAD FILE:		PART NO:	
A	0.05	0.1	0.15	0.2	0.3	0.4	P-E FILE:		DWG. NO:	
B	0.1	0.15	0.2	0.3	0.5	0.8	MATERIAL: Iron		FINISH:	
C✓	0.2	0.3	0.4	0.5	0.7	1.0	DWN.	CHKD. / APP.	REVISION:	PAGE OF
D	0.4	0.5	0.7	1.0	1.5	2.0			REMARK:	