JS LED®

LED Garden Light

LED Garden light features outstanding photometric perfor mance uniform illumination, low-profile design,high effica-cy, long lifespan, and easy installation. The one piece die-cast aluminum housing with UV resistant.powder coat finish offers outstanding corrosion protection, A low profile, artful design adds a distinctive look inany outdoor applica-tion, Ideal for both large-scale municipal and institutional projects, such as parking lots, walkways, roadways, cam-puses, grocery stores and other public areas.

Catalog Number	Description	Angle	Lumens	Watts	CCT	Voltage
SZ-GL60W02-P-ACP	LED Garden Light	120°	8400 Lm	Adjustable 20/30/40/50/60W	Adjustable 3000K/4000K/5000K	120V - 277V Optional 120-347V
SZ-GL150W02-P-ACP	LED Garden Light	120°	21000 Lm	Adjustable 70/80/100/120/150W	Adjustable 3000K/4000K/5000K	120V - 277V Optional 120-347V

ORDERING GUIDE

Example: SZ-GL150W2-P-ACP

Company Code	Fixture Type	Wattage	02	Voltage	Sensor	ACP
SZ Company Name	**GL** Garden Light	**60W** **150W**	**Generation 2**	**Blank** 120-277V **MV** 120-347V	**P** **Photocell** Blank no Sensor	**ACP** Adjustable CCT and Power 60W: 20/30/40/50/60W 3000K/4000K/5000K 150W:70/80/100/120/150W 3000K/4000K/5000K

JS LED®

LED Garden Light

Specifications

Housing
Sealed die-casting profile for outdoor applications.

Electrical
Standard 120V - 277V, Optional 120-347V
0-10V dimming standard with a dimming range of 100%to 10%. PF > 0.9. Surge protection: 6KV.
Wth Photocell

CCT and CRI
Adjustable3000K/4000K/5000K. CRI 70.

Angle
Standard 120°

Operating Temperature
Suitable for use in -40° C to 45° C (-40° F to 113° F).

Efficacy
Up to 140 lumens per watt.

Lifespan
L70 >50,000 Hours at 25°C (77°F).

Certifications
UL Listed for wet locations, DLC5.1,FCC compliant, IP65 rated.

Warranty
5-year limited warranty.

Dimension:

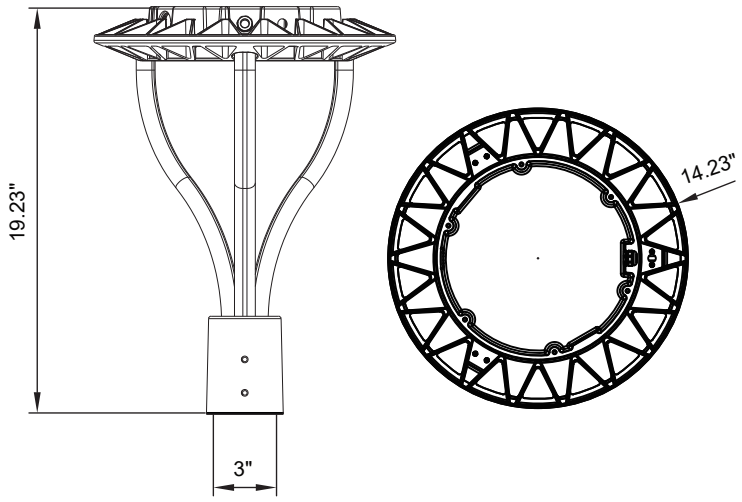

Packing/Weight:

Model	Outer box (L*W*H)	Qty/CTN (pcs)	N.W./pcs (lbs/kg)	G.W./CTN (lbs/kg)	Remark
SZ-GL60W02-P-ACP	15.94*15.94*20.9" 405*405*530mm	1	10.05/4.57	11.92/5.42	
SZ-GL150W02-P-ACP					

JS LED®

LED Garden Light

INSTALLTION INSTRUCTION:

1.Pass the leads of the lights through the stem, then fix the stem with the lamp,as shown below.

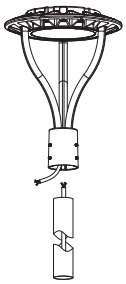

2.Turn off power,and make wiring connections with terminal cap (see wiring instruction below),as shown below.

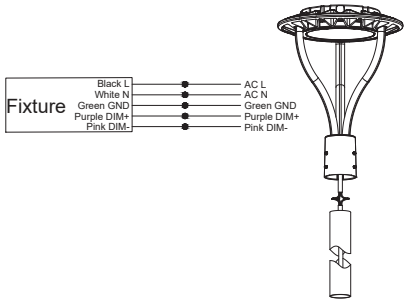

3.Pass the leads of the light through the tenon pole, then using screws to fix it,as shown below.

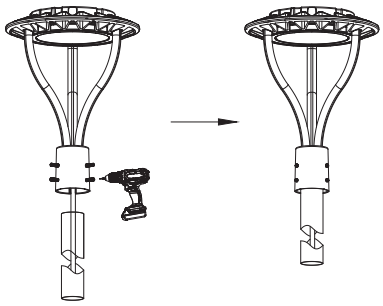

ADJUST POWER AND COLOR TEMPERATURE INSTALLATION

1.Use a screwdriver to remove the fixing screws,as shown below.

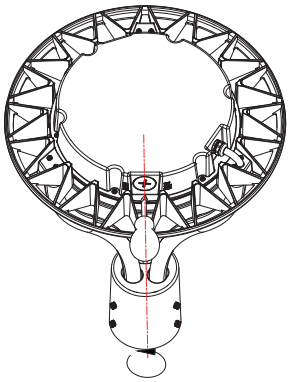

2.Remove the fixing screws and cover plate,as shown below.

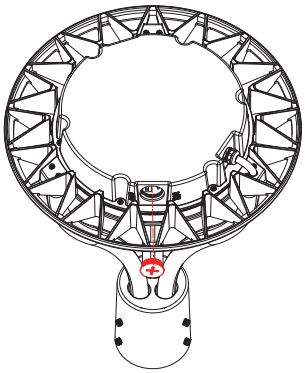

3.Flip the color temperature switch to the desired color temperature, flip the power switch to the desired wattage,as shown below.

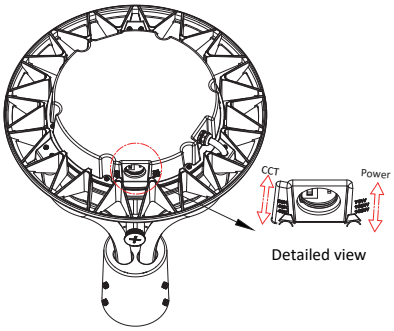
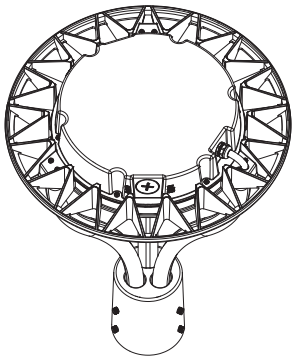
4.Restore the installation in the order of Step 21e, as shown below.