RANGEHOOD & INSTALLATION GUIDE

HN-6C / HN-6CB

Scan for the latest Digital manuals

Under our policy of continuous product development, product specifications may change without notice. Please refer to the online version of the manual for the latest updates and specifications.

schweigen

www.schweigen.com.au
www.schweigen.co.nz

Contents

1. Welcome **3**
Your State Regulatory Authority 3

2. Your Safety **4**
Before Installation 5
Product Use 6
Ducted or Recirculating? 6
Electrical Cord 6

3. Description **7**
Main Rangehood 7
Cutout Size 7

4. Specifications **8**
Dimensions 8
Technical Specifications 8

5. Operation **9**
Push Button Control Panel 9
Speed Control 9

6. Cleaning & Maintenance **10**
Cleaning the Interior 10
Cleaning the Oil Drip Tray 10
Cleaning the Exterior 10
Filters 11
Replacing the Lights 12

7. Installation **13**
Rangehood Size vs Cooktop Size 13
Overhead cabinet Rangehood Installation position 13
Mounting Instructions 14
Recommended Installation Height for Induction Cooktop 14
Mounting Points for Body 15
Installation Example 16
Ducting 17
Back Draft Fins (For applicable models) 17
Adding Carbon Filters (optional) 18
Ducting Advice 19
Roof Cowls / Roof Seal Kit 20
Faulty Installation 20

8. Condensation Information **21**
Cooking with Induction Cooktops 21

9. Troubleshooting **22**
Troubleshooting 22
Service 22

10. Disclaimer **23**

1. Welcome

Thank you for purchasing your new Schweigen rangehood.

To get the maximum output from this unit, please read through this guide before use.

The guide contains important information on the use and maintenance of the unit, as well as important safety notes. This will ensure your personal safety and the lasting value of your rangehood.

Please always retain your proof of purchase to aid in any warranty queries.

If you are unable to locate your warranty card, one is available to download from our website **www.schweigen.com.au. | www.schweigen.co.nz.**

This appliance and its packaging are produced by processes that minimise waste and respect the environment.

Please help us to continue this effort to protect the environment by using the appliance efficiently and dispose of the packaging in a responsible manner.

We trust that you will enjoy your new Schweigen rangehood.

Your State Regulatory Authority

Different Australian states have varying legislative requirements for the installation of rangehood ducting. Some will insist on ducting being vented externally (i.e. not in to the ceiling cavity); others will not. It is imperative that you check with your state building authority and/or private certifier to confirm their position.

2. Your Safety

WARNING

Please read this section thoroughly before attempting to operate the appliance. Inspect your product upon receipt. Any damage or defect **MUST** be reported within **48** hours, or no claim will be recognised.

DO NOT INSTALL THIS APPLIANCE IF YOU FIND IT DAMAGED.

If this product is installed damaged, neither the supplier, nor the retailer, will be responsible for the costs associated with the repair, replacement, removal or re-installation of the appliance.

1. There shall be adequate ventilation in the room when the rangehood is used at the same time as appliances burning gas or other fuels.
2. There is a fire risk if cleaning is not carried out in accordance with the instructions.
3. Do not flambé under the rangehood. This will damage the rangehood and will not be covered by warranty.
4. Do not ignite burners that give off intense, uncontrolled flames beneath the rangehood.
5. Make sure that no flames emerge from the sides of pans.
6. Do not leave packaging materials (bags, corner brackets, etc) within reach of children.
7. This appliance is not intended for use by person/s (including children) with reduced physical, sensory or mental capabilities, or lack of experience and/or knowledge. Unless the person has been given supervision or instruction concerning the use of the appliance by a person responsible for their safety. Children should be supervised to ensure that they do not play with the appliance, it is not a toy.
8. Exhaust air must not be discharged into an existing flue that is used for exhausting fumes from appliances burning gas or other fuels.
9. Air exhaust must be installed in accordance with local laws. Regulations concerning the discharge of air have to be fulfilled.
10. Accessible parts may become hot when used with cooking appliances.
11. Before performing any cleaning or maintenance operation, disconnect the rangehood from the mains using the respective mains or sector switch or by unplugging it.
12. Do not use the rangehood without the grease filters.
13. Keep the grease filters clean and respect the recommended cleaning frequencies.
14. Turn the rangehood motor on before starting to cook.
15. Turn the rangehood motor off about 10-15 minutes after you finish cooking.
16. It is forbidden to use the rangehood as an aspirator.
17. Never cook foodstuff directly over the flame or have the gas burners on under the rangehood without using cookware.

Before Installation

1. We recommend this appliance be installed or repaired by an experienced home appliances technician.

2. Please see our website **www.schweigen.com.au | www.schweigen.co.nz.** for experienced installers.

3. It is dangerous to modify any part of this appliance. Modification of any kind, will immediately void the warranty.

4. The manufacturer declines all responsibility in case of failure to adopt proper safety measures.

5. Ensure that the location in which this appliance is installed, has good and permanent ventilation.

6. Please consult local laws and regulations and install in accordance.

7. Use an electrical connector with earth that is correct for your location.

8. Check that the voltage in your area corresponds to the appliance as indicated on the rating label.

9. This appliance must be connected to an electricity supply with a **ground connection**.

10. Check that the installation and electrical connections are made by a qualified technician and that the indicated instructions and local regulations in force are met, using materials that are compliant with the applicable legislation.

11. The company will not be responsible for installations executed by non-qualified staff and installations that fail to heed the applicable legislation on electrical safety (with regard to both modes and materials).

12. The electrical technical data can be found inside the rangehood, after removing the grease filters.

13. The flexible power cable supplied is already connected internally and emerges from the rangehood near the air outlet tube.

14. Before installing the electrical connections, you should:

- Verify that the indicated electrical data coincide with the voltage values and frequency of the electrical circuit in the house where the rangehood is to be installed;
- Check that the premises has electrical protection against short circuits and electrocution, pursuant to the applicable legislation;
- Always switch off the current using the double-pole switch before maintenance and turn the power on again for normal use only when the operation has been completed.

Product Use

This product is designed for household use and should not be used for commercial applications.

After use, always ensure that all controls are in the "OFF" position.

When frying with a gas flame, take particular care not to allow the oil or grease in the pan to catch fire. (Flambé)

Rangehoods and other cooking fume extractors may adversely affect the safe operation of appliances burning gas or other fuels (including those in other rooms) due to back flow of combustion gases. These gases can potentially result in carbon monoxide poisoning. After installation of a range hood or other cooking fume extractor, the operation of flued gas appliances should be tested by a competent person to ensure that back flow of combustion gases does not occur.

Ducted or Recirculating?

Ducted rangehoods (or extractor rangehoods) extract the cooking fumes from the kitchen and expel them from the space via ducting. Good design practice would always see a fire-rated ducting system extend to the house exterior, rather than to the ceiling cavity. When a rangehood is ducted only into the ceiling space, the collection of humidity and grease can present very real health issues and fire hazards.

Recirculating (or non-ducted or filtered) rangehoods extract cooking fumes and pass them through filters. As the name would suggest, they recirculate this air back into the room. Recirculating rangehoods are not as effective as removing fumes from a kitchen space, but they are sometimes the only option due to budgetary or building constraints. Your client should be made aware of the requirement to change and clean filters on a regular basis for the optimum efficiency of air filtering.

Electrical Cord

Ensure the supply cord is not exposed to heat, chemicals or sharp objects. If the supply cord is damaged, it must be replaced by the manufacturer.

Main Rangehood

1. Power Plug (Main Power 230V)

2. Single Outlet 150mm

3. Filter

4. Lights

5. Oil Drip Tray

Note: Filter and light quantity may vary from model to model.

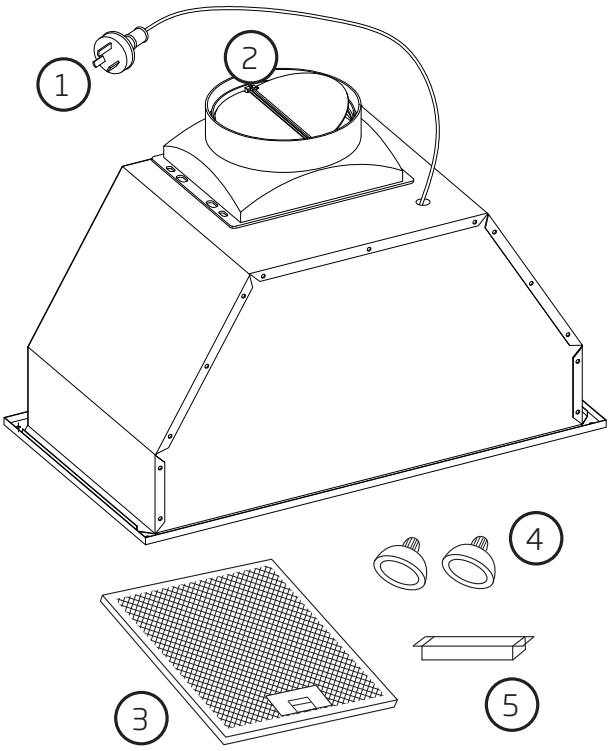

Cutout Size

Use this as a guide only when designing your cabinet. We advise you to take the rangehood to your cabinet maker so they can tailor the cabinet to fit correctly.

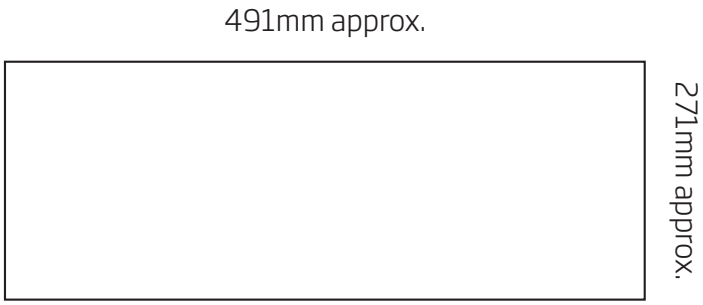

Dimensions may be subject to change.

Note: Please make sure that all plastic protection on the rangehood and filters are removed before use.

Dimensions

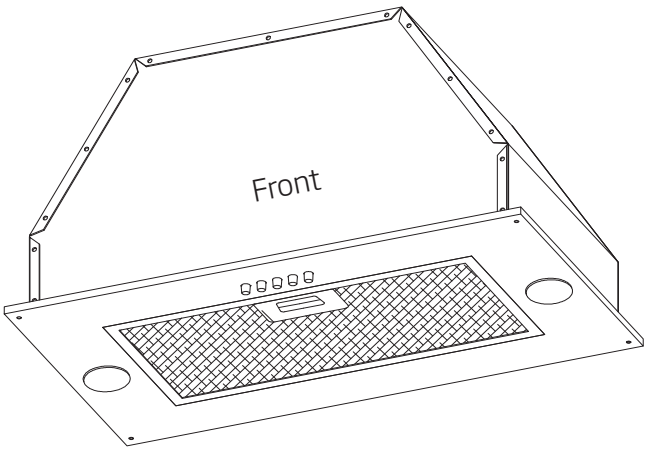

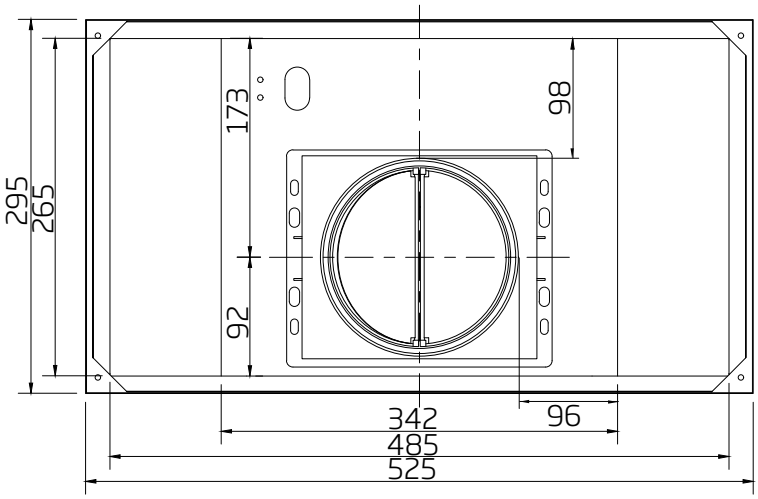

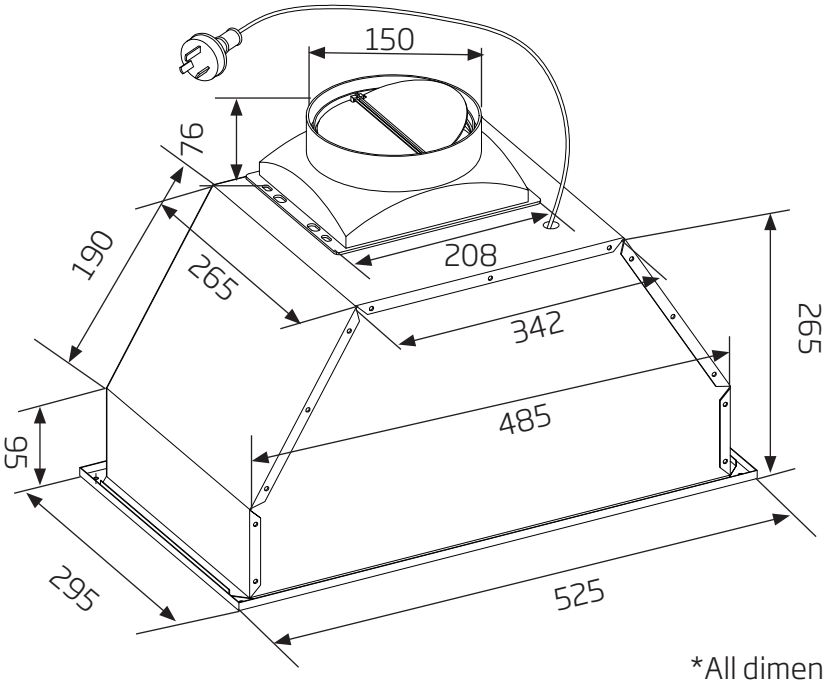

*All dimensions are in millimetres

Technical Specifications

Model	HN-6C / HN-6CB
Feeding Voltage	240V 50Hz
Lamp Power - LED (W)	2 x 3W
Lamp Color Temperature	6500K

Push Button Control Panel

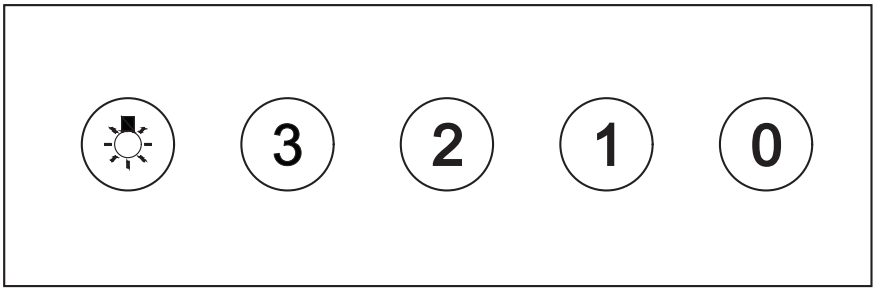

- 0 Turn off the rangehood
- 1 Low speed setting
- 2 Medium speed setting
- 3 High speed setting
- Turn on/off the light

Speed Control

This undermount is equipped with a 3 speed mechanical control. Speed control usage suggestions:

- **Low speed** for simmering.
- **Medium speed** for light cooking.
- **High speed** for heavy frying or heavy cooking.

6. Cleaning & Maintenance

Warning

Always switch off and disconnect power before cleaning.

Cleaning the Interior

Clean the interior of the rangehood with a damp cloth and a neutral detergent.

NOTE: Do not use denatured alcohol on the interior of the rangehood. Do not clean the electric parts or the motor with liquids or solvents

Cleaning the Oil Drip Tray

Clean the oil drip tray regularly, remove filters from the rangehood then remove drip tray from the motor.

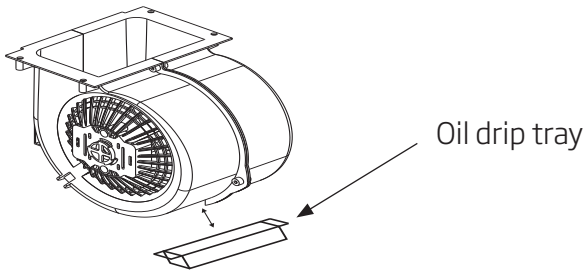

Cleaning the Exterior

We recommended using a soft cloth, water and a liquid soap, rinsing it well and then drying it thoroughly. For better results, you can use high quality cleaning and protection products to clean your rangehood.

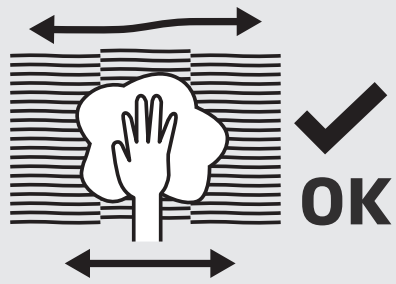

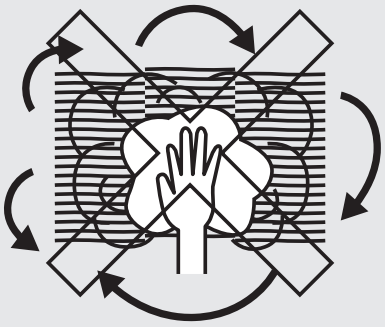

- The recommended detergent is a solution of water and a neutral liquid soap.
- It is very important for the liquid soap to not contain granules that could scratch the surface.
- First apply the solution to a soft cloth and then rub the cloth over the rangehood. It is important to follow the direction of the stained surface with the cloth (refer to figure on left).
- Do not pour any liquid directly on to the rangehood.
- The cloth must have no buttons, zips or fasteners that could scratch the surface.
- It is strictly forbidden to use chemical solvents, aggressive, grainy or abrasive products, naphtha, alcohol or similar products that could damage the surface of the rangehood.
- The manufacturer will not be held responsible for functional or aesthetic damage caused by cleaning with products which are not suitable or using inadequate cleaning methods.

Filters

For this appliance to function effectively, regular maintenance is a must.

- The function of the filter is to absorb the grease particles given off during cooking.
- Clogged filters and heavy oil deposits restrict airflow and may cause the motor to overheat and become a fire hazard.
- Filters should be cleaned every 3-6 weeks or after 40 hours of use.
- For induction cooktop, please aim to clean them at least every 10 days, depending on use.
- The filters can be washed by hand or in the dishwasher.
  - **Washing by hand -** Immerse the filter in hot water and a suitable detergent and when clean, rinse with plenty of hot water.
  - **Dishwasher -** Put the filter in the dishwasher and select a short program at low temperature. NOTE: The colour of the metal mesh filters may change after several washes. This is normal and it is not necessary to change the filters.

Please ensure the filters are completely dry before placing them back in position and operating the rangehood.

To remove the filter press handle and remove it through the front guide; bend it slightly and remove filter. To replace, perform the same operation but in reverse.

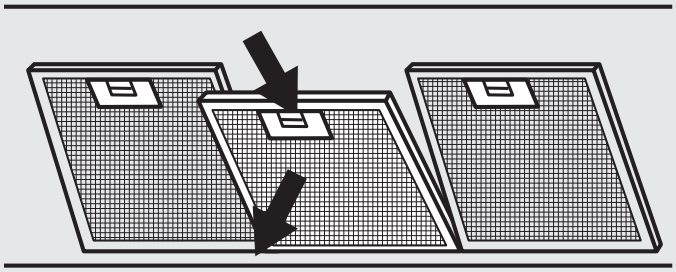

Warning

- If the grease filters are very dirty, the motor will extract only a small quantity of air, which reduces its efficiency;
- The grease deposits that build up on the filter are highly flammable and **COULD EASILY CATCH FIRE**.
- The manufacturer is exonerated from all responsibility in the event of fire due to poor maintenance of the grease filters.

Replacing the Lights

Danger

Always switch off and disconnect the power cord before replacing any light. Failure to do so may cause serious injury. Please be aware that the light will retain heat for a short period of time after being switched off.

Step 1

Remove the filters from the rangehood.

Step 2

Gently turn light anti-clockwise, pull the light down and remove it from the light holder.

Step 3

Insert a new light by lining up the pins of the light with the larger holes inside the light holder. Once the pins are in place, turn clockwise to secure the light.

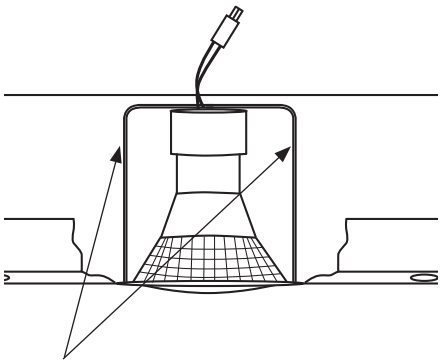

Adjusting screws on both sides of the light holder to move the holder up and down, achieving the optimal position and easier replacement of the light

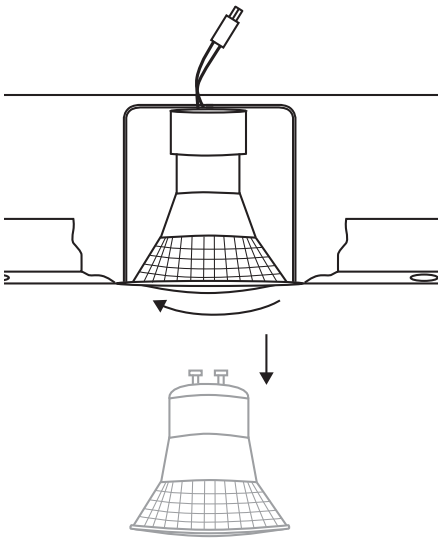

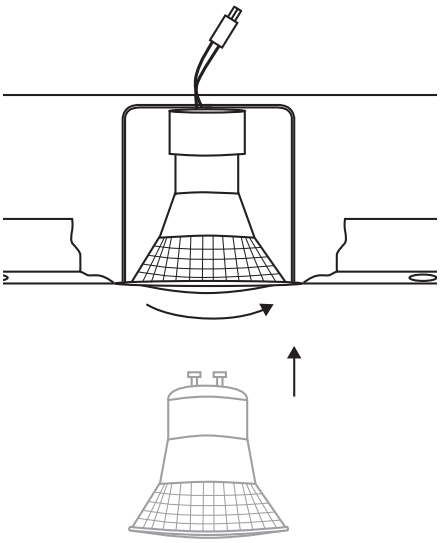

Rangehood Size vs Cooktop Size

In addition to the size, the height of the rangehood above the cooktop is important to obtain the best performance.

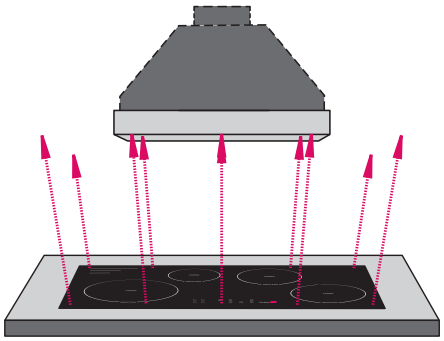

INADEQUATE
Rangehood smaller than cooking zone

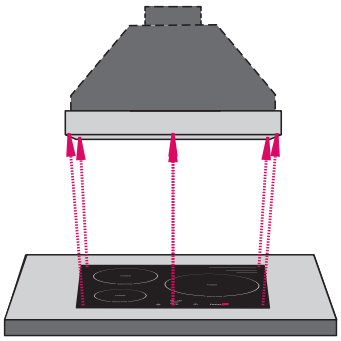

ADEQUATE
Rangehood same size as cooking zone

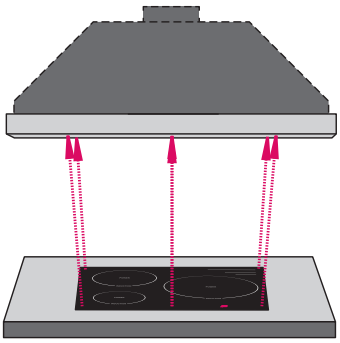

OPTIMAL
Rangehood larger than cooking zone

Overhead cabinet Rangehood Installation position

It is important to consider the benchtop and overhead cabinetry depth before installing the rangehood.

The information below is to be used as a guide only, drawings are not to scale and do not account for all circumstances.

The cooktop is centrally installed in the benchtop in the diagrams below.

GOOD

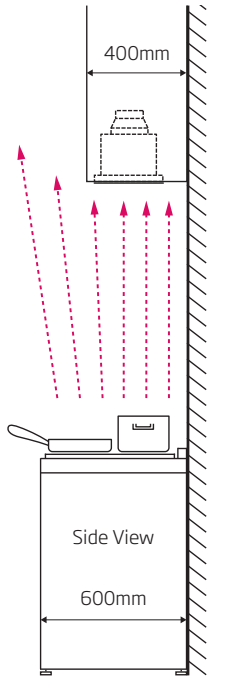

BETTER

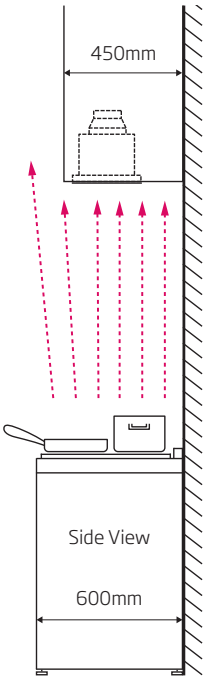

BEST

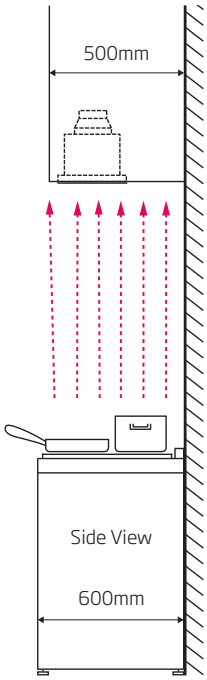

When the overhead cabinetry is constructed and installed deeper than standard, ensure the rangehood is installed as close to the front as possible. This will increase the rangehood extraction results as there is a greater coverage of the cooktop surface area.

Mounting Instructions

It is STRONGLY RECOMMENDED that the rangehood be installed centrally over the cooktop. This will greatly improve its performance.

Minimum height from the hob surface to the underside face of the rangehood:

- 600mm electric cooktop
- 650mm gas cooktop

Any installation above 800mm will compromise the extraction performance.

Note: If the instructions for the gas cooktop specify a greater distance, this must be taken into account. A 600mm Rangehood should not be installed over a hob with more than four elements.

Recommended Installation Height for Induction Cooktop

To help avoid condensation, particular to cooking with an induction cooktop, Schweigen recommends a height between 700-750mm. Refer to page 21 for further information.

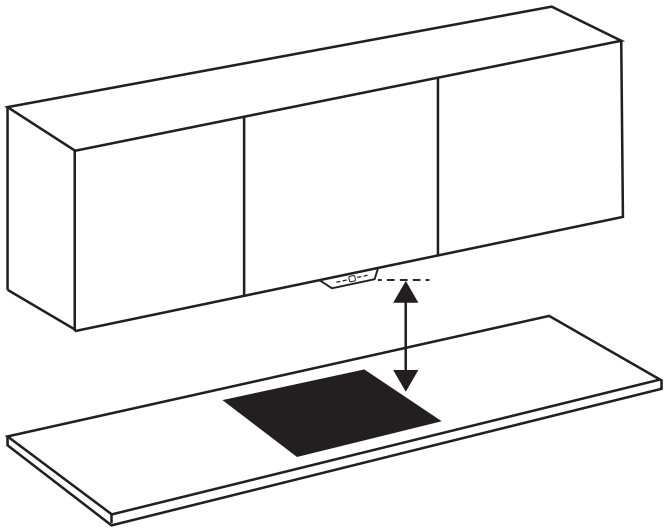

Measurements are from the top of the trivets to the lowest part of the rangehood, including the button controls.

***IMPORTANT:** If the user decides to install the rangehood at a distance of less than minimum height above the cooking surface, Schweigen declines responsibility for damages suffered by the rangehood due to excess heat or damage to objects, people and others caused directly or indirectly by a malfunction, breakage or fire.

***Important:** In addition to the information in this manual, please check all relevant state requirememnts for minimum-maximum heights, as well as regulations regarding the expelling of air. Schweigen is not liable if your rangehood is not installed in accordance with these legal requirements.

Mounting Points for Body

The diagrams below are a guide for all mounting points.

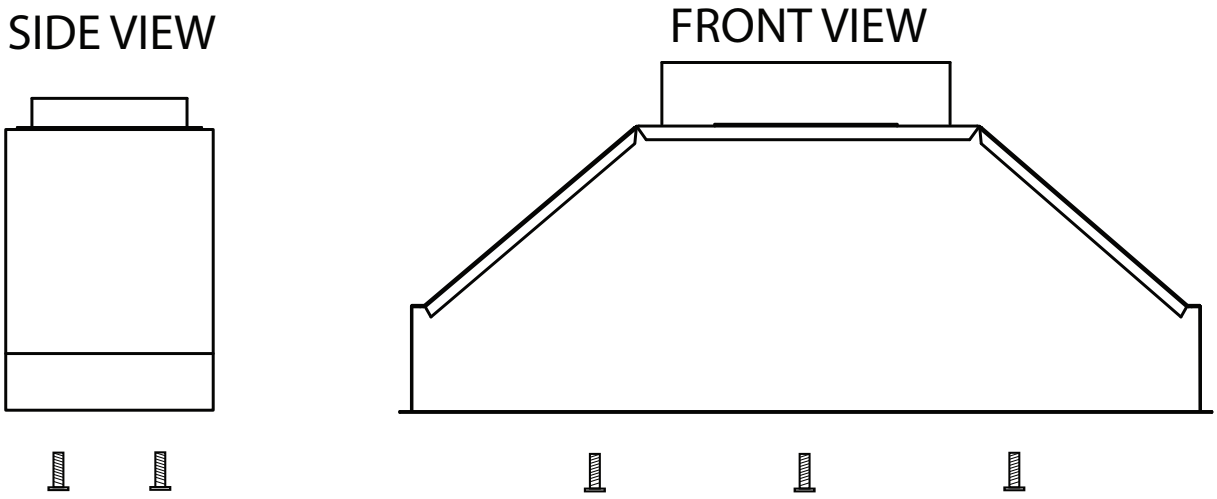

Note: Please make sure all plastic protection on the rangehood and filters are removed before use.

WARNING

Please remove filters before installation. Failure to do so may damage the clips.

DANGER

Always switch off and disconnect the power supply before installing the rangehood. Failure to do so may cause serious injury.

Installation Example

Step 1

Please make sure the cut out size is correct before installing the rangehood.

Install the back draft base to the rangehood.

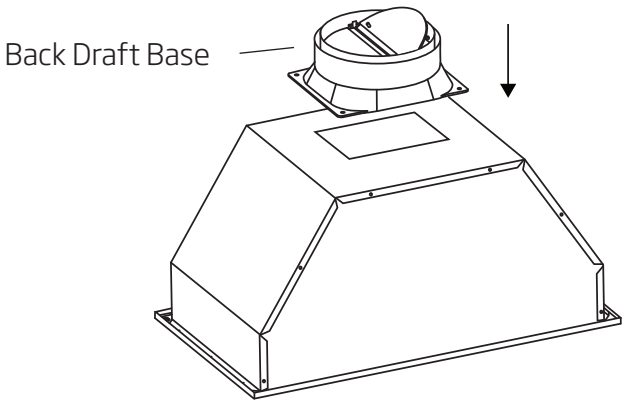

Step 2

Secure the undermount into cavity using screws. All screws are installed from the bottom of the rangehood into the cabinet.

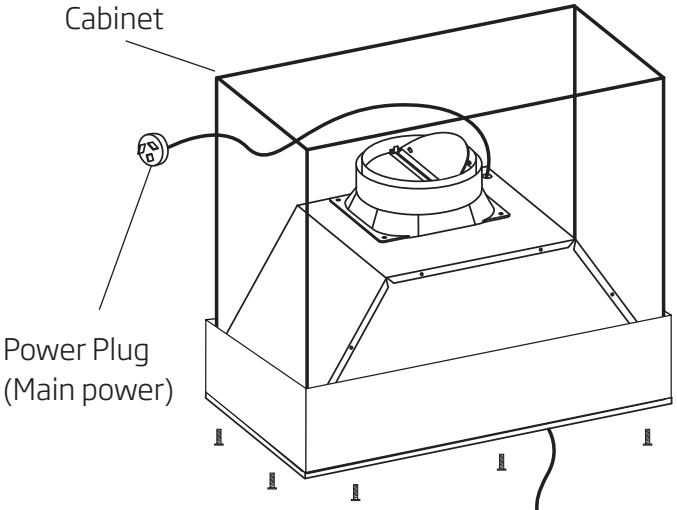

Step 3

Connect the 6-pin connector on the face plate to the corresponding connector on the rangehood, ensuring it is securely fitted before proceeding. Next, insert the light globes into their designated holders on the face plate, ensuring they are properly positioned. Carefully align the face plate with the cabinet and secure it in place using the screws provided. Finally, install the filter into its designated position, ensuring it is correctly seated and securely fitted.

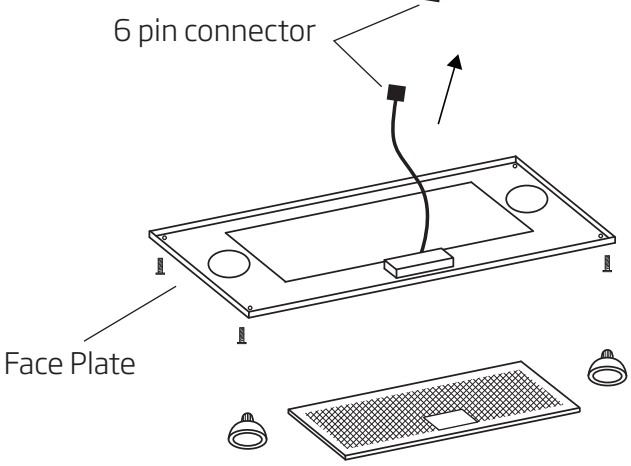

NOTE

Remove all plastic protection on the rangehood and filters before use.

Ducting

The ducting diameter MUST be 150mm. The overall length of the ducting should not be greater than 4 metres.

Please DO NOT crush or kink the ducting.

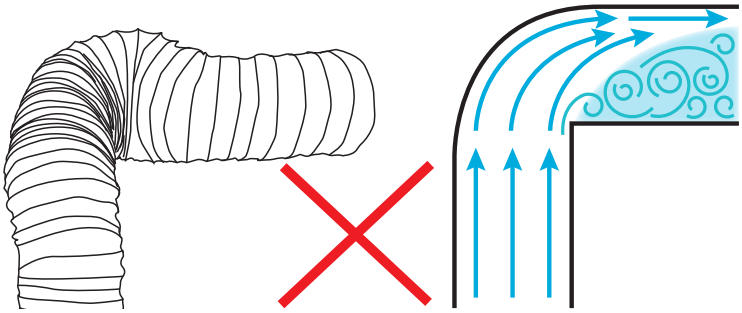

1. Crushed or kinked ducting creates sharp corners that creates turbulence. This reduces the size and efficiency of the ducting, lowers extraction and may cause excessive noise.

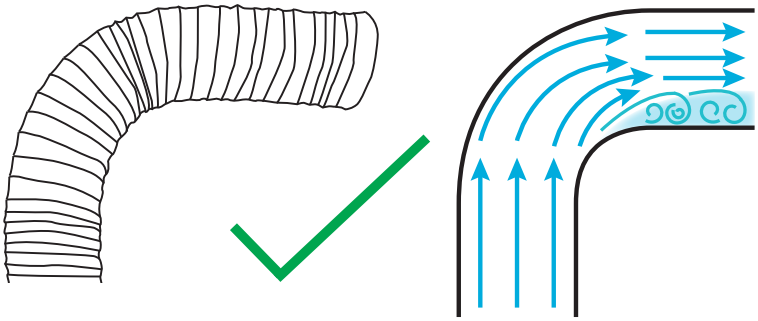

2. Sweeping curves and taut ducting reduces resistance and turbulence. The airflow and extraction will be more efficient and stronger.

Back Draft Fins (For applicable models)

The supplied ducting has been manufactured with an allowance for the back draft fins to operate without hindrance. It is the smooth extended end of the ducting.

When installing Back Draft Fins, please ensure that you insert the Back Draft Fins onto the back draft base, which are attached to the top of the motor outlet before installation. Then place the smooth extended edge of the ducting into the back draft base and fix securely.

Should your Back Draft Fins get stuck, this is not a warranty issue.

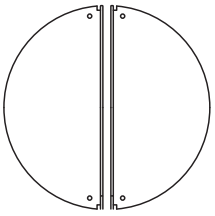

Back Draft Fins

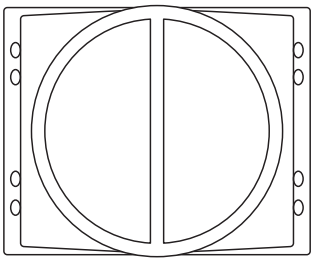

Back Draft Base

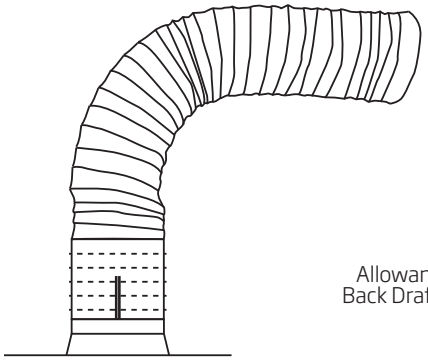

Back Draft Fins open position

Back Draft Fins ducting

Adding Carbon Filters (optional)

If you are using the appliance in the recirculation mode, a carbon filter must be fitted.

- Detach the grease filter first.
- Press the lock and pull it downward.
- Plug the activated carbon filter into the unit and turn it in a clockwise direction.
- Repeat the same on the other side.
- Please ensure that the filter is securely locked, otherwise it can come loose and become a hazard.
- When the carbon filter is attached, the suction power may be lower.
- Please replace the carbon filter every 4 to 6 months; depending on cooking frequency & method, you may need to replace the filter more or less frequently.

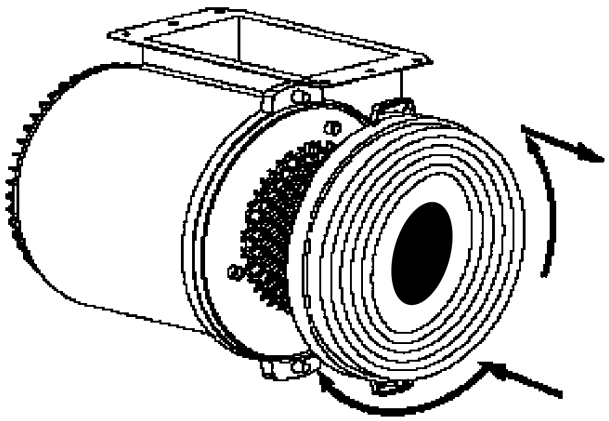

Ducting Advice

RECOMMENDED

1.

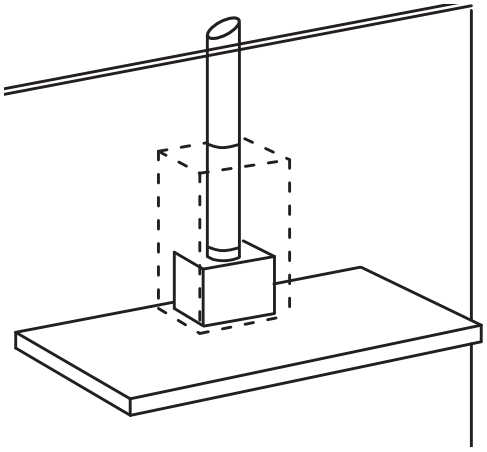

Straight ducting is the most effective installation

2.

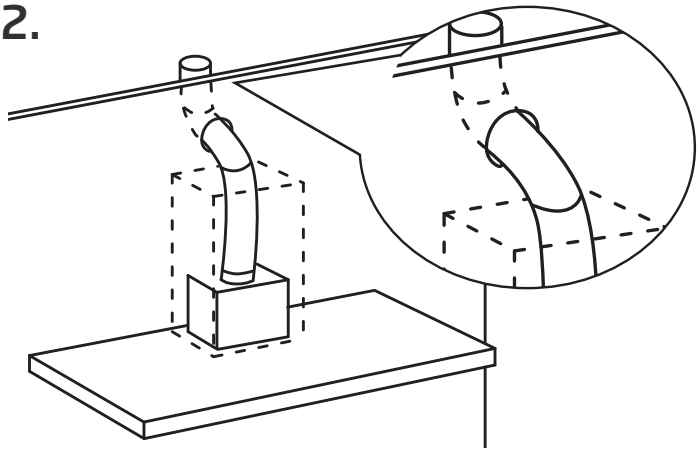

Keep the curves or bends to a minimum. If they do exist, try to keep the angles as open as possible.

AVOID

1.

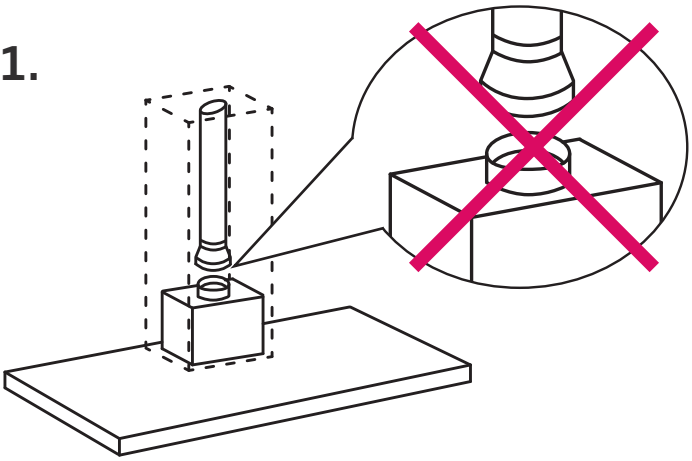

Never reduce flue diameter right next to the rangehood outlet fitting.

2.

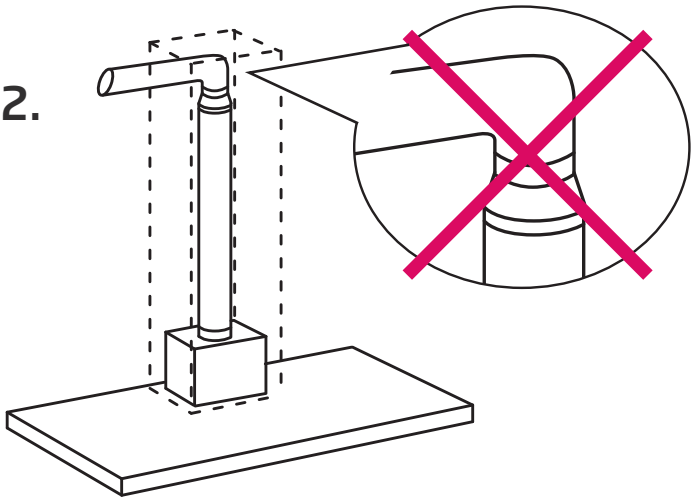

Never fit reductions next to curves or bends in the installations. They must always be in straight sections and as far as possible from the rangehood.

3.

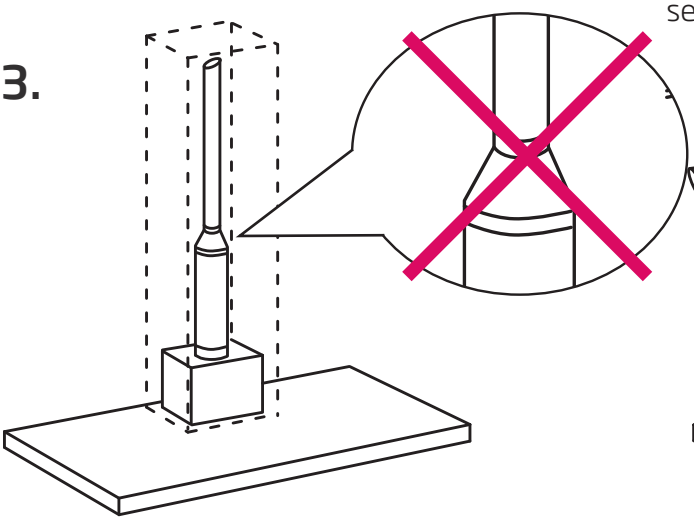

Avoid excessive reduction of the flue size, as this drastically reduces extraction capacity.

4.

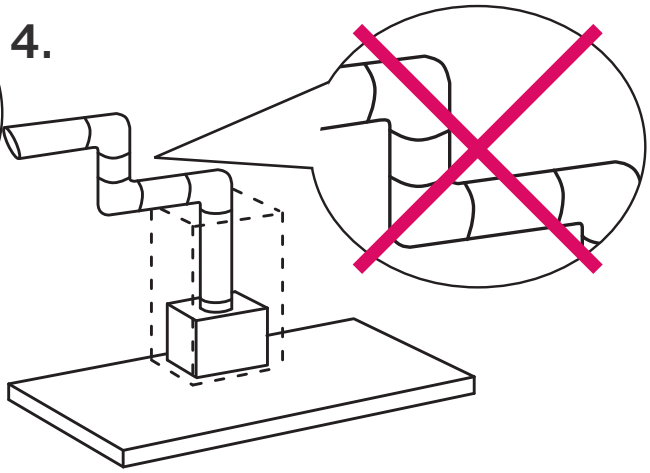

You should not have more than two bends in the installation.

Roof Cowls / Roof Seal Kit

WARNING

All electrical wiring should be kept inside the roof space.

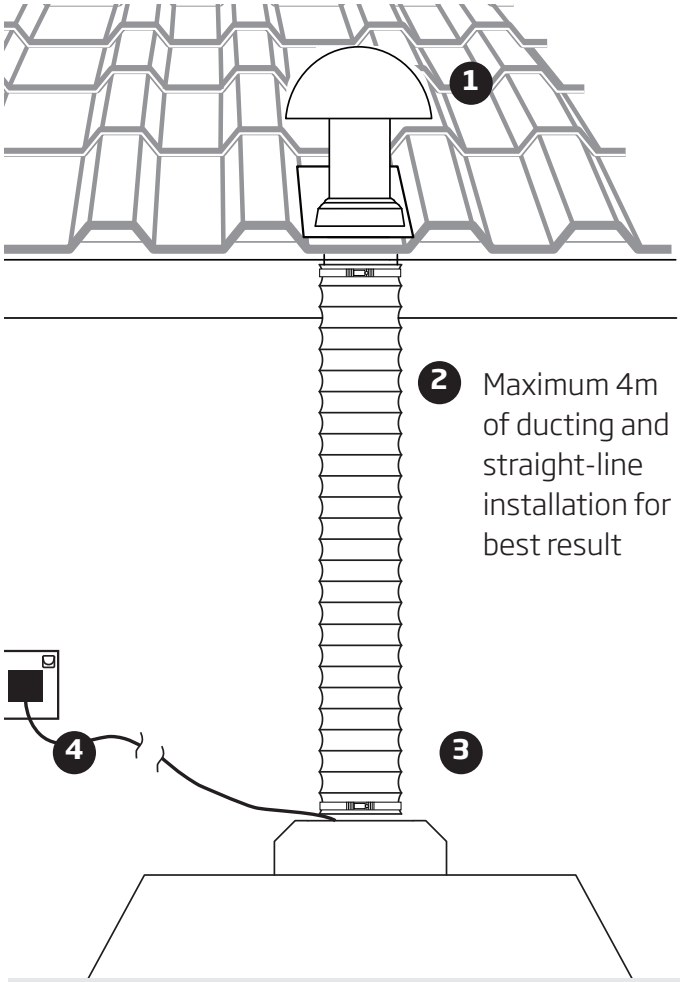

1. Roof Cowls (Not supplied)*
2. Ducting must be pulled taut. **DO NOT** crush or kink the ducting.
3. Connect ducting to the outlet on rangehood using a ring clamp. Please **DO NOT** rip the ducting.
4. Power Plug

NOTE

* Rangehood does not include the roof seal/roof cowls, ducting, ring clamp or support straps.

Do not reduce the ducting diameter, this will reduce airflow.

Faulty Installation

It is not the responsibility of Schweigen to rectify any incorrect installations. A service call out fee will be charged for any Schweigen technician that attends a call, whereby it is established that the fault is due to an incorrect installation or non-manufacturing fault. Should the appliance be installed in such a way that the service agent is unable to gain access to the appliance, the person/s who own the premises or the property where the appliance resides will be responsible to provide access to the appliance at their expense.

Cooking with Induction Cooktops

Cooking with an induction or similar cooktop, may produce condensation on the rangehood.

Unlike basic electric or gas cooking, induction cooktops heat food and liquid instantly, which in turn, produces vapours rapidly. Because of this rapid process, the rangehood filters do not have enough time to warm, which increases the chance of condensation forming.

There are many variables that may contribute to condensation forming, some of which include but are not limited to:

- Variance in climate – geographical location
- Position of your home & kitchen – morning/afternoon sun
- Installation distance from cooktop to the rangehood
- Speed of food & liquid heating
- Filter size – larger canopy preferred
- Quality of pots or cookware you are using – high quality recommended

How to reduce the possibility of condensation forming:

- Ensure the rangehood is installed by a qualified professional, carefully following the installation guide
- Turn on the rangehood 5-10 minutes prior to cooking, and leave on for 5-10 minutes after cooking; this helps clear remaining vapours from the flue.
- Start the cooking process at a low-to-medium setting and allow time for the rangehood to warm up.
- Clean filters regularly.
- Ensure constant airflow in the cooking zone; this helps optimise the rate of extraction.
- Follow all induction cooktop manufacturer advice.

For further advice, tips or information regarding cooking with induction, please contact your induction cooktop manufacturer.

Troubleshooting

If the product does not work:

Before you contact the technical service department, make sure that the product is plugged in, and electric wiring is connected. Weak air suction may be caused by back draft fins remaining closed. Do not take any action that will damage the product.

	Check electric connection. Voltage of the electric network should be between 220 - 240V, rangehood should be connected to grounded plug and turned on.	Check motor switch. Please ensure that there is power to the rangehood and the rangehood is switched on.	Check light switch. Light switch should be at on position.	Check metal filter. Metal filter should be washed regularly, see filter cleaning.	Check lights. Lights should be firm.	Check outlet. Outlet should be open.	Check lights. Make sure they are not broken or faulty.	Please make sure there is no obstruction in ducting or back draft fins.	Check the outlet, make sure it is not blocked and you have the correct diameter ducting installed.
Rangehood does not work	X	X							
Light does not work	X		X		X		X		
Rangehood air suction is weak				X		X		X	X
Rangehood does not direct air out (through chimney)				X				X	
Loud noise from the rangehood									X

Service

Lodging an Online Service Request

In the event that the failure is not due to the faults mentioned in the Troubleshooting section, you can lodge an online Service Request. To lodge an online Service Request, visit our website www.schweigen.com.au/service-and-warranty and click on the link and complete the service request form.

A service request will require the following information:

- The purchase date
- The rangehood model
- The serial number or batch number (this number is on a sticker inside the rangehood).
- A copy of the purchase receipt (without a receipt your service request cannot be processed).

Alternatively, you can call Customer Service:

Australia **1300 881 693**

New Zealand **0800 259 644**

Disclaimer

Under our policy of continuous product development, product specifications may change without notice. Prospective purchasers should therefore check with the retailer to ensure this publication correctly describes the products being offered for sale. All information supplied is to be used for general reference purposes only and is on the understanding that Schweigen will not be liable for any loss, liability or damage of whatever kind arising as a result of any reliance upon such information. All pictures used in the guide are for illustrative purposes only.

Schweigen Home Appliances has presented this information in good faith to all their retailers and distributors to convey before any/all purchase/s. Information is supplied upon the condition that the person/s receiving the information will make their own determination as to its suitability for their purpose/s prior to use. In no event will Schweigen Home Appliances be responsible for damages of any nature whatsoever resulting from the use of, or reliance upon, information from their website or the products to which the information refers.

DISPOSAL OF OLD APPLIANCES

Electronic waste (or e-waste) including kitchen appliances are banned from direct disposal to landfill. E-waste contains hazardous materials, which can harm the environment and human health. Valuable materials contained in e-waste are lost when appliances, computers and other household electrical goods are sent to landfill.

Recycle your e-waste to:

- reduce landfill
- protect the air and waterways from harmful materials
- minimise consumption of raw materials to produce electronic products
- reduce greenhouse gases created in the production of new materials.

Kitchen appliances including Rangehoods and Ovens can only be disposed at approved recycling centres. Visit **www.recyclingnearyou.com.au/whitegoods** for more information, or contact your local council or the store you purchased this appliance, for a list of approved recyclers.

schweigen

Australia Unit 4/1-5 Lake Drive, Dingley Village, Victoria 3172.
Phone 1300 881 693 **Email** sales@schweigen.com.au
Web www.schweigen.com.au

New Zealand Ground Floor, 165 The Strand, Parnell, Auckland 1010.
Phone 0800 259 644 **Email** servicerequest@schweigen.co.nz
Web www.schweigen.co.nz

Scan for more contact details

Revision V17 14/10/26