THIS DOCUMENT IS TRUE AND CORRECT AT TIME OF PUBLICATION. CONTINUED PRODUCT IMPROVEMENTS MAKE SPECIFICATIONS AND MEASUREMENTS SUBJECT TO CHANGE WITHOUT NOTICE.

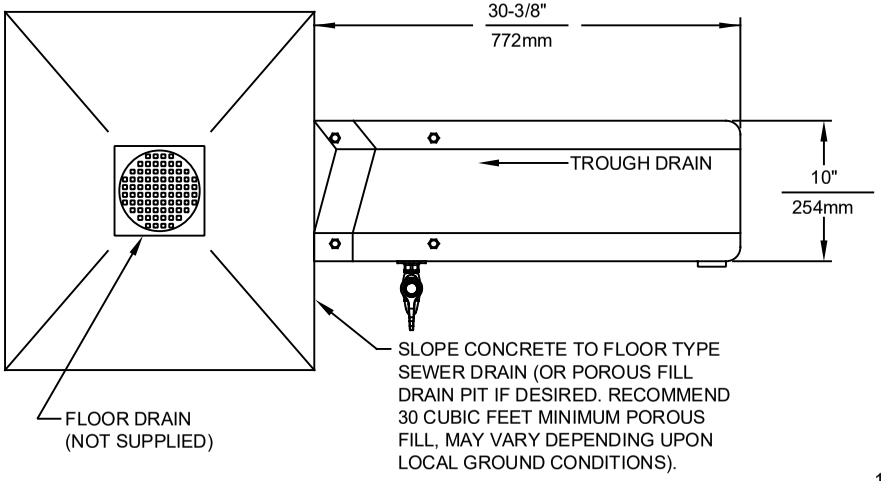

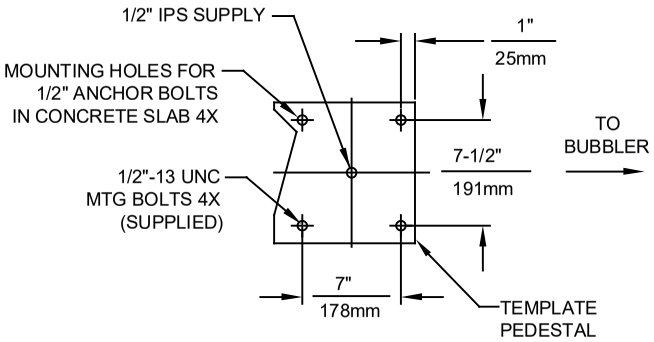

MOUNTING DETAIL

IMPORTANT: ATTENTION INSTALLER

USE CARE TO AVOID KINKS WHEN ROUTING SUPPLY LINE TO VALVE AND FROM VALVE TO BUBBLER

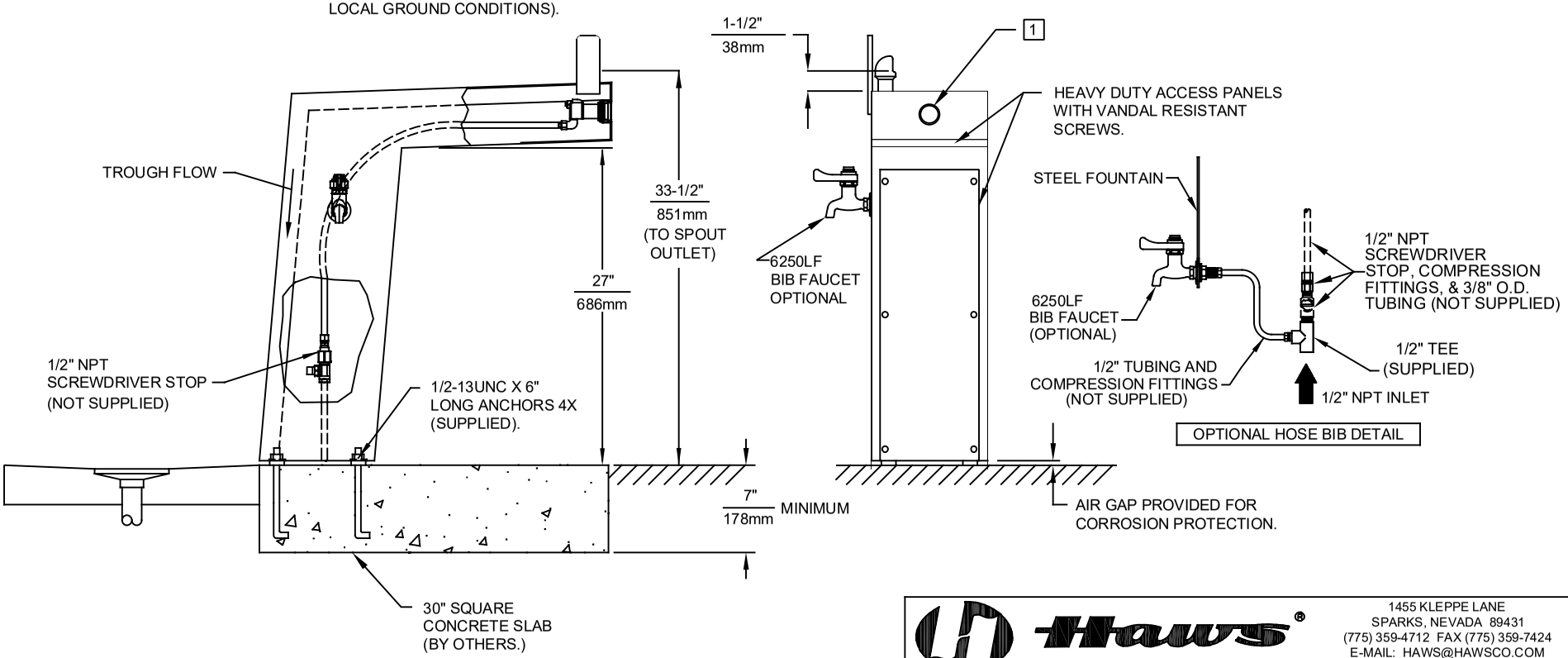

NOTES:

1 REFER TO 5874 SERIES OPERATION AND MAINTENANCE MANUAL FOR PUSH BUTTON AND VALVE INSTALLATION/MAINTENANCE INSTRUCTIONS.

Haws®
1455 KLEPPE LANE
SPARKS, NEVADA 89431
(775) 359-4712 FAX (775) 359-7424
E-MAIL: HAWS@HAWSCO.COM
WEBSITE: WWW.HAWSCO.COM

ECN NO.	REVISED PER ECN: 5265	BY: JP	MODEL(S) 3202/3202G	PART NUMBER 0002077328.D
DRAWN: C. HAYES	DATE: 11/91	CHK'D.: GC		REVISION 25
APPROVED: FV	DATE: 02/23/18		SCALE: 1:14 DRAWING TYPE: INSTALLATION SIZE: A	SHEET 1 OF 1

©2018 Haws Corporation - All Rights Reserved. HAWS® and other trademarks used in these materials are the exclusive property of Haws Corporation.