FIXED HEIGHT CONE TABLE
42" Ø X 29"H
MDL 39101

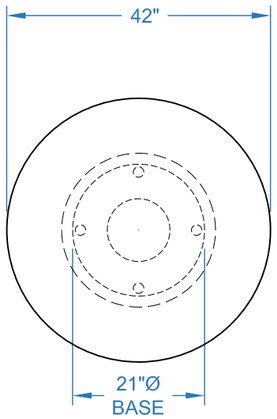

FIXED HEIGHT CONE TABLE
48" Ø X 29"H
MDL 39102

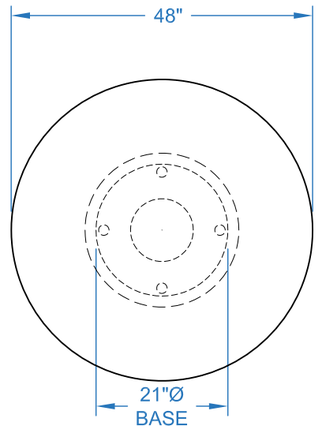

FIXED HEIGHT CONE TABLE
54" Ø X 29"H
MDL 39103

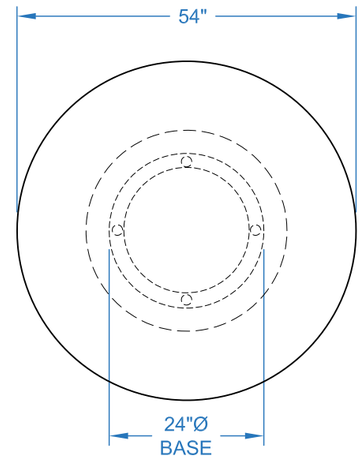

FIXED HEIGHT CONE TABLE
60" Ø X 29"H
MDL 39104

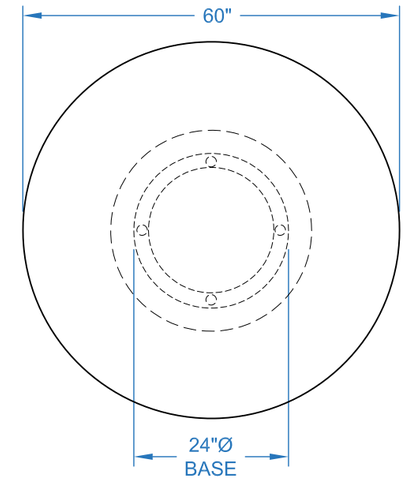

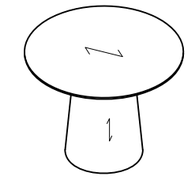

FIXED HEIGHT CONE TABLE
66" Ø X 29"H
MDL TBD

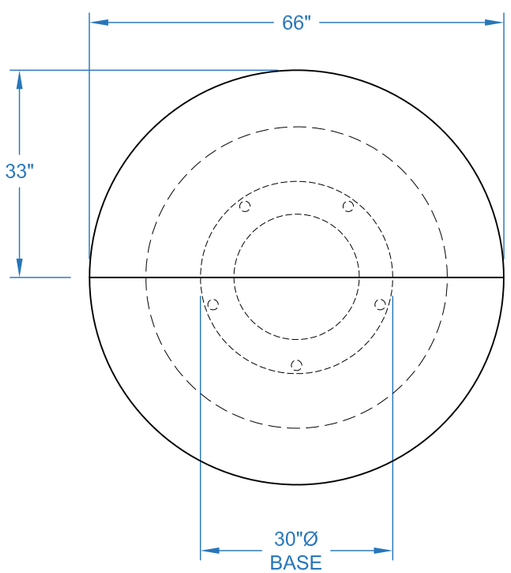

FIXED HEIGHT CONE TABLE
72" Ø X 29"H
MDL TBD

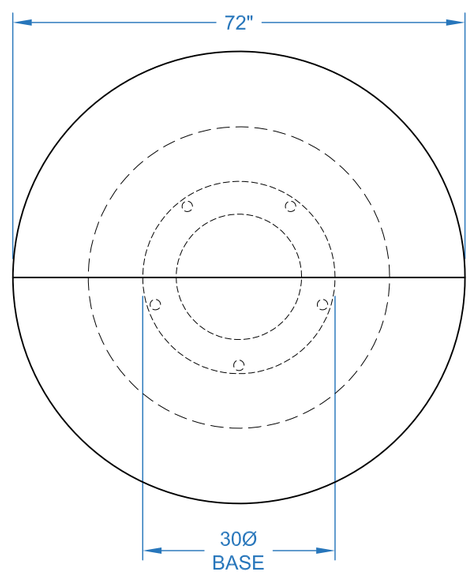

HEIGHT ADJ. CONE TABLE
42" Ø X 29"-44"H
MDL 39101/2A

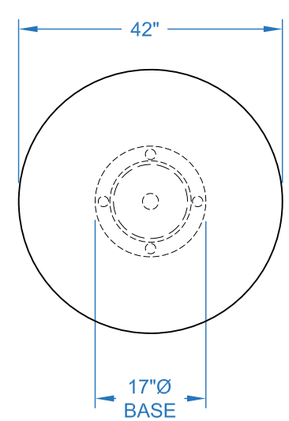

HEIGHT ADJ. CONE TABLE
48" Ø X 29"-44"H
MDL 39102/2A

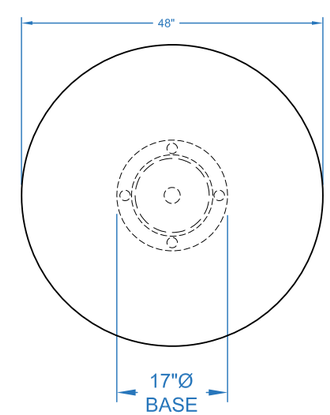

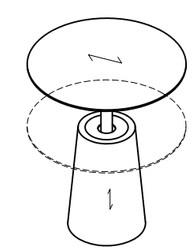

PRINT ON 11 X 17

NOTE: BASE DIAMETER DIMENSIONS SHOWN ARE NOMINAL

nienkämper
257 Finchdene Square, Scarborough,
Ontario, Canada, M1X 1B9
Tel 416 298 5700 Fax 416 298 9535
www.nienkamper.com design@nienkamper.com

THIS DRAWING IS CONFIDENTIAL AND PROPRIETARY. NO PART OF THIS DRAWING MAY BE COPIED, DISCLOSED TO ANY THIRD PARTY OR USED FOR ANY PURPOSE WITHOUT THE EXPRESS WRITTEN AUTHORIZATION OF NIENKAMPER FURNITURE & ACCESSORIES

OC-Project: CONE TABLE COLLECTION	Drawing No: 1 OF 1		Issue Drawing To: CS CUST. SERV.
Title: PLAN VIEW SYMBOLS			
Scale: 3/4"=1'-0"	C.S. Rep:	Date: OC 21, 2022	Revision No. R-1
Drawn: DESIGN DEPT.		Dwg For WEBSITE	
Rev Details: 66" & 72" DIA. ADDED		PART # : -	Rev Date: NOV 11, 2025