PLAN VIEW

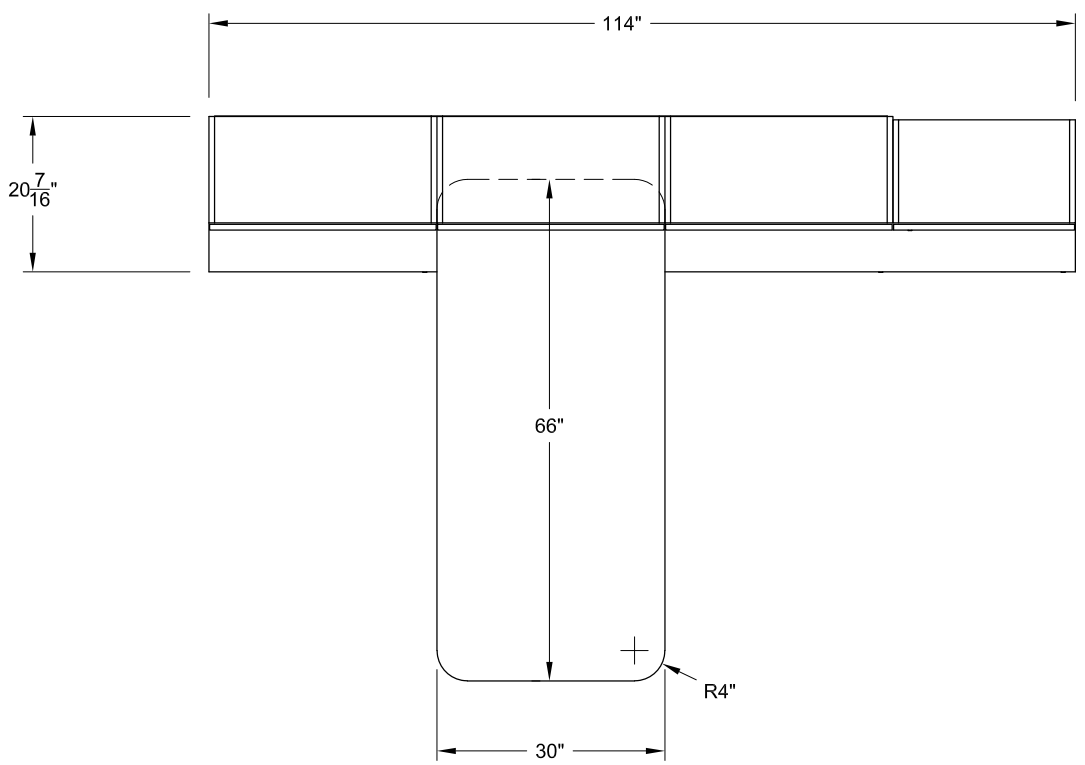

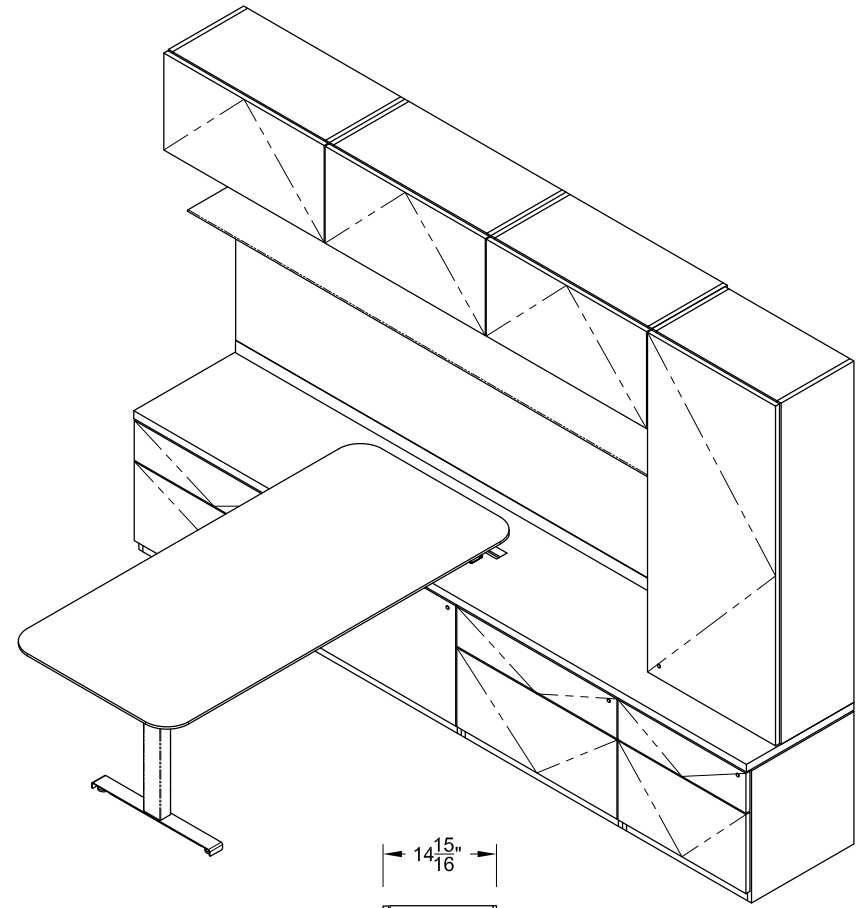

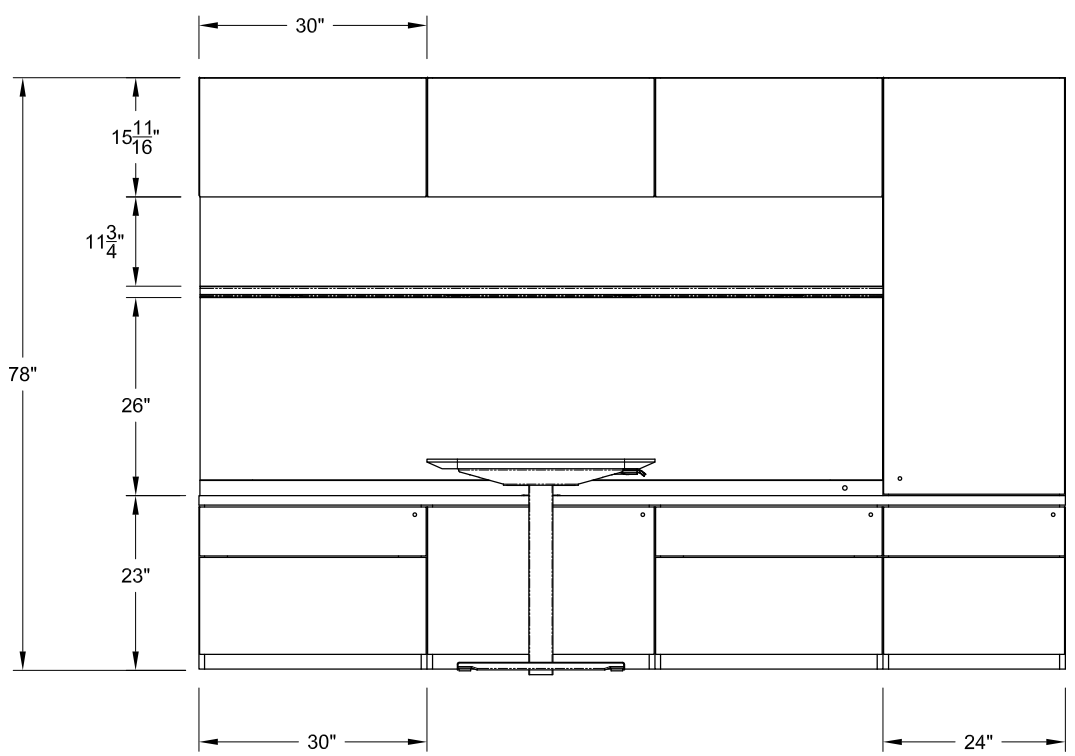

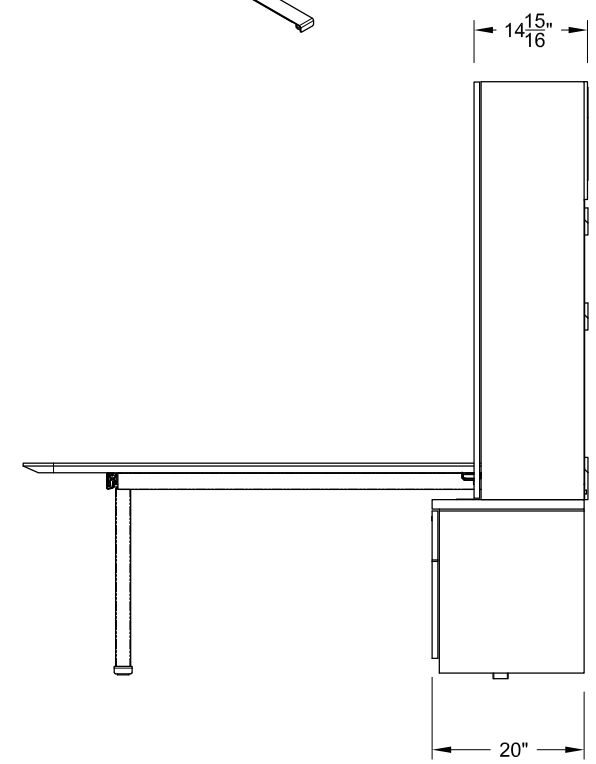

NOTES:

- SOME NOMINAL DIMENSIONS ARE REFLECTED IN THIS DRAWING - NOT TO BE USED FOR ENGINEERING.
- DETAILS AND DIMENSIONS CONTAINED IN THIS DRAWING ARE NON-BINDING AND SUBJECT TO DESIGN IMPROVEMENT.
- NIENKAMPER RESERVES THE RIGHT TO MAKE CHANGES WITHOUT NOTICE.

nienkämper
International Inc.
257 Finchdene Square, Scarborough, Ontario, Canada, M1X 1B9
Tel 416 298 5700 Fax 416 298 9535
www.nienkamper.com design@nienkamper.com

THIS DRAWING IS CONFIDENTIAL AND PROPRIETARY. NO PART OF THIS DRAWING MAY BE COPIED, DISCLOSED TO ANY THIRD PARTY OR USED FOR ANY PURPOSE WITHOUT THE EXPRESS WRITTEN AUTHORIZATION OF NIENKAMPER FURNITURE & ACCESSORIES

OC-Project: ARA EXECUTIVE OFFICE		Drawing No: 1 OF 1	Issue Drawing To: CS CUST. SERVE
Title: 2D CAD SYMBOL DRAWING			
Scale: N.T.S	C.S. Rep:	Date: APRIL 16, 2025	Revision No. R-
Drawn: DESIGN DEPT.		Dwg For CLIENT REVIEW / WEBSITE	
Rev Details:		PART # : -	Rev Date: