LIBRA H3

LIBRA is the innovative family of CABINET HANGERS and WALL PLATES especially conceived to satisfy all the customer's needs. The LIBRA hangers are to be installed behind the rear panel with the only small cover caps left visible inside the cabinet.
LIBRA is a very resistant and reliable solution as the zinc-coated steel body is sensibly thicker, and therefore stronger.
All the models within the LIBRA family feature an innovative ANTI-TURNOVER device which is covered by patent.
LIBRA H3 is the left/right cabinet hanger with 3 semi-circular pins + pre-inserted screw for the top (if required).
Also featured in the LIBRA family are 5 types of wall plates and 1 types of wall bar made of very thick zinc-coated steel and hardened by punched impressions.

Wall bars and wall plates feature oval holes which facilitate the correct positioning and give the possibility to carry out the horizontal adjustment. Placement of the holes for wall-fixation has been optimised to reduce the stress on the plates and on the plugs.
LIBRA cabinet hangers allow to adjust the cabinet vertically and horizontally. The 2 movements are 100% INDEPENDENT of each other and therefore make the adjustments much easier and more efficient. The adjustment and the locking of the ANTI-TURNOVER bolt can be carried out from the inside of the cabinet by using a standard PZ2 screwdriver.

Capacity Loading 70 Kilos per piece

Steel, Zinc alloy and Engineering plastic according to related version.

INSTALLATION UNDER THE CABINET TOP

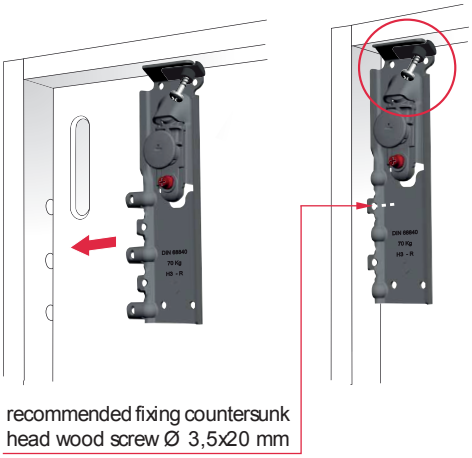

Pre-inserted plastic clip with screw Ø 4x25 mm - PZ2

Without plastic clip.
Recommended fixing countersunk head wood screw Ø 3,5x20 mm

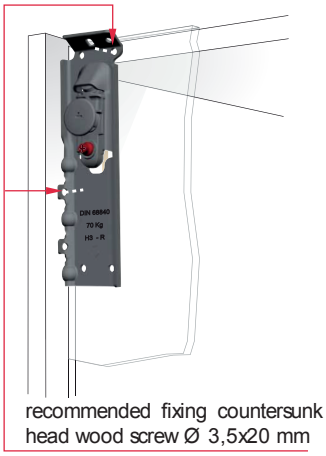

INSTALLATION ON THE WALL

- For details refer to "LIBRA WALL PLATES"

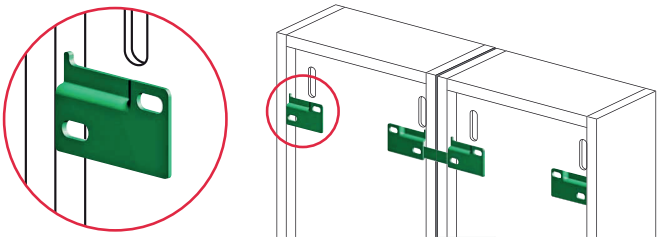

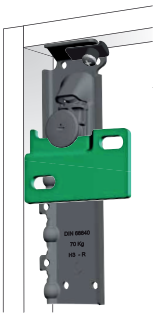

It is the responsibility of the customer:
- to ensure that the wall is of a suitable quality to hold the unit fixing in place.
- to use the proper hardware fittings according to the construction of the wall.

For more specific information, please refer to the WARNINGS section at the end of the catalogue.

COVER CAP INSERTING

- For details refer to "LIBRA COVER CAPS"

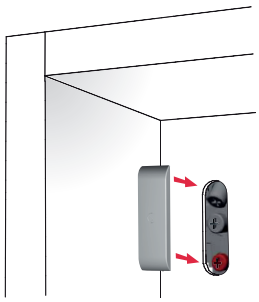

ADJUSTMENTS

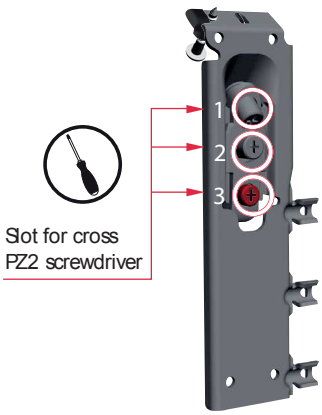

1
VERTICAL ADJUSTMENT
13 mm

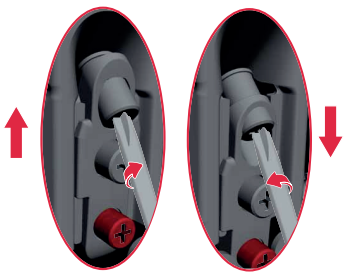

2
IN-DEPTH ADJUSTMENT
12 mm

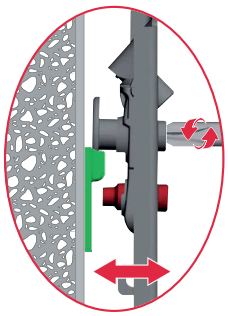
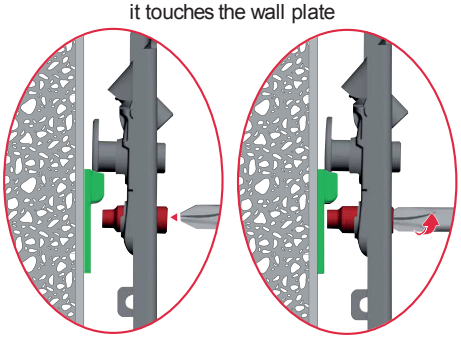
3
ANTI-TURNOVER LOCKING
Stop screwing the red bolt when it touches the wall plate