URM-18-PC

Shower Kit with Hand Shower

Spare Parts Sheet

Kit of spare parts for preventive maintenance.

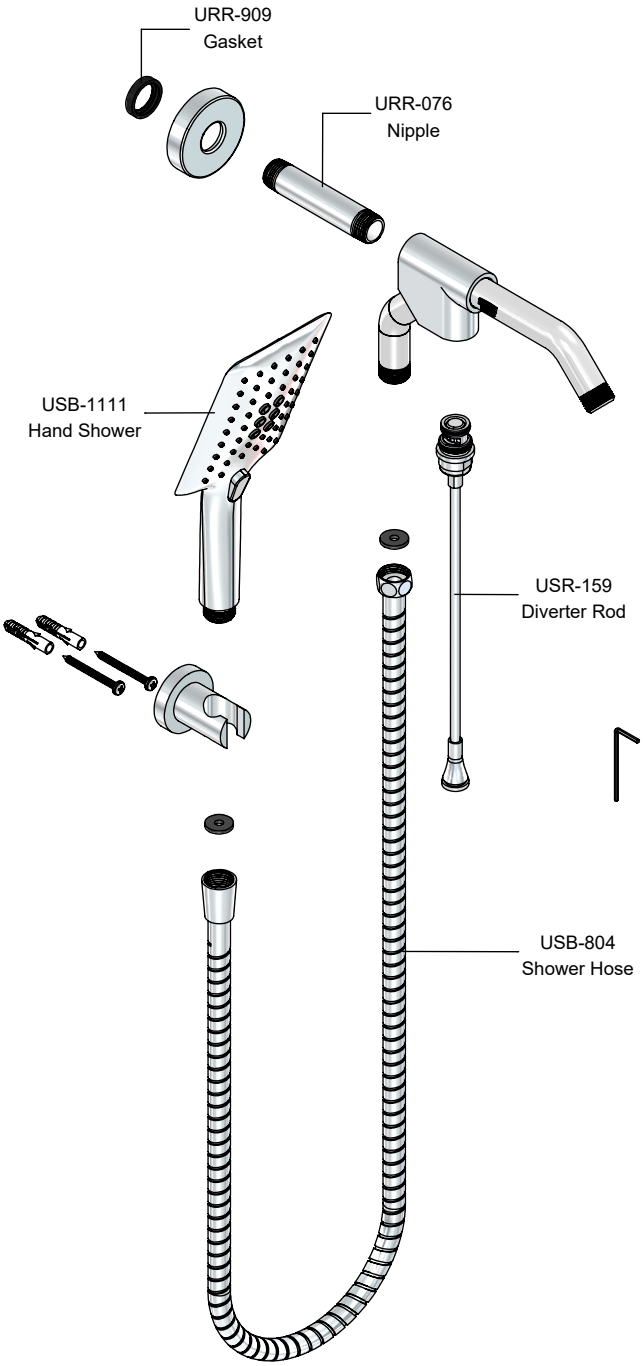

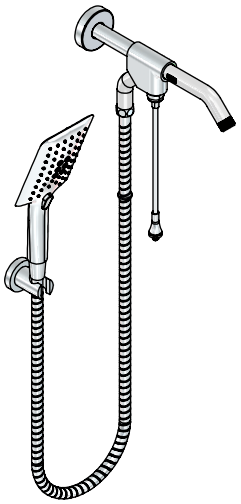

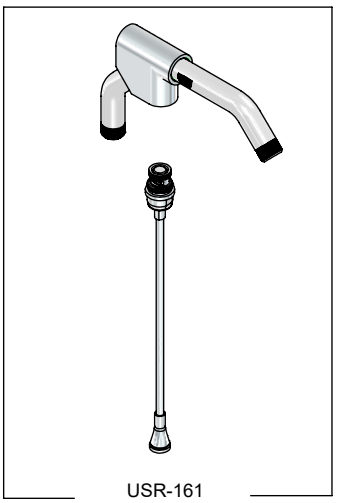

USR-161
Shower Head Handle Shower

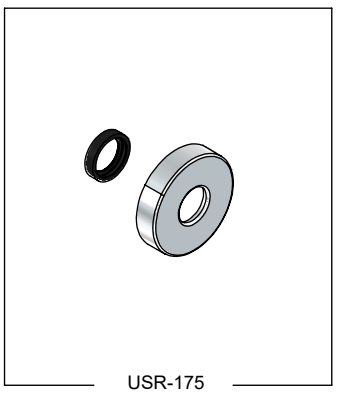

USR-175
Escutcheon

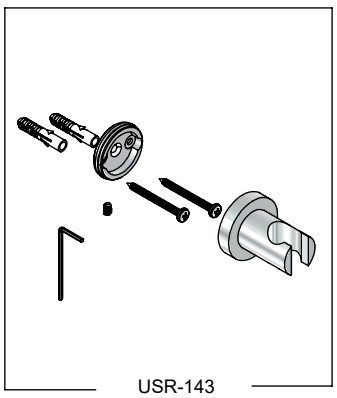

USR-143
Hand Shower Holder Kit

Technical Support and Service

technicalservice@helvexusa.com

Toll Free Number: (210) 394-5686

Customer Service

contact@helvexusa.com

Toll Free Number: (855) 267-2498

Original Spare Parts

The product's illustration may vary in appearance or its parts to the actual product as a result of the ongoing improvement process. This does not imply any liability to the manufacturer.
Visit our website **www.helvexusa.com**

NB