DAVIS®

Techniq Table Price List

Designed by Jonathan Prestwich

Effective January 1, 2026

DAVIS®

Techniq Table Series

Specifications 2
Nesting 3
Images. 4
Veneer Finishes 5
FENIX® / Standard Laminates. . .6
Powder Coat Finishes 7
Configurations 8

T-Legs
Rectangle *Edge* Base. 9
Rectangle *Inset* Base. 10

C-Legs
Rectangle Tops. 11
Semi-Circle Tops 12
Trapezoid Tops. 12

Joining Top 13

Modesty Panel. 14

Power 15-16

For information concerning Condition of Sales, Warranty, Fabric, Finishes, etc., please download the *Conditions of Sales.pdf* on the Davis web site: www.davisfurniture.com

BIFMA COMPLIANT®

BIFMA Compliant,® the commercial furniture industry's registry of standards-conforming products.

TECHNIQ Table Series

Designed by Jonathan Prestwich

FEATURES

Power Access Lid

All power access lids will be anodized aluminum or matte black

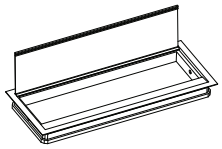

Open

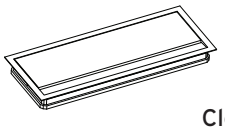

Closed

Casters

All training tables come standard with two locking and two non-locking universal casters. Universal casters are designed to work on all floor types. Must specify **TQ-BLCA** Black caster, **TQ-MGCA** Mid Grey Caster, or **TQ-CHCA** Chrome and Black Caster.

Ganging

Ganging devices are standard on all training tables

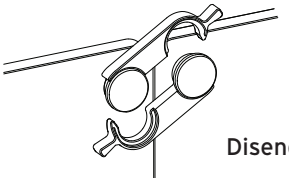

Disengaged

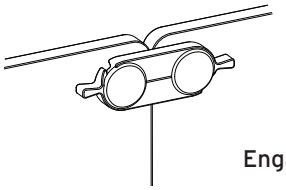

Engaged

Legs

T-Legs – Chrome plated or powder coated aluminum

- **Edge Legs** - legs are 2 $^1/_2$" from the edge of the table. Provides increased user leg space for training settings
- **Inset Legs** - legs are inset 15" from the edge of the table. Allows users to sit along all four sides of the table.

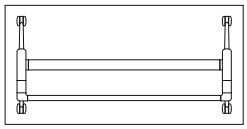

Edge Base

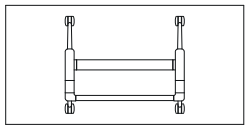

Inset Base

C-Legs – Chrome plated or powder coated aluminum

- C-Leg creates a one-sided working table that allows for narrow widths, perfect for tight working spaces

Release Mechanism

The "anywhere release" spans the length of one side of the table. This design allows users to engage the flip top option from any point on the mechanism user side.

C-Leg Tables - gas cylinder and springs are included in the release mechanism

T-Leg Tables - uses a system of springs for the release mechanism

Modesty Panels

Veneer - $^1/_2$" thick MDF core panel with 1mm solid wood edgeband

Laminate - $^1/_2$" thick MDF core panel with 1mm ABS edgeband

Felt - $^1/_2$" thick pressed Grey felt. Felt is 3D molded form fleece. Pressed felt has the characteristics to maintain its molded shape.

Tops & Edge Treatments

Training Tables

Veneer Tables - $^3/_4$" thick MDF core with 1mm solid wood edgeband

Laminate Tables - $^3/_4$" thick MDF core with 1mm ABS edgeband - *must specify*

Solid Color laminates - all have matching ABS edge bands.

Wood Grain laminates - ***Natural Ash, Nut Brown Cherry, Finnish Oak, and Formal Walnut*** have matching ABS edge bands. For all other wood grain laminates a solid color ABS edgeband must be selected.

FENIX® Tables - $^3/_4$" thick MDF core with 1mm *ABS edge band to match top color*

Wire Management Trough

Pressed Grey felt that is 3D molded form fleece. Pressed felt has the characteristics to maintain its molded shape however is flexible enough for wire access when tables are in the horizontal position.

Nesting

T-Leg nesting

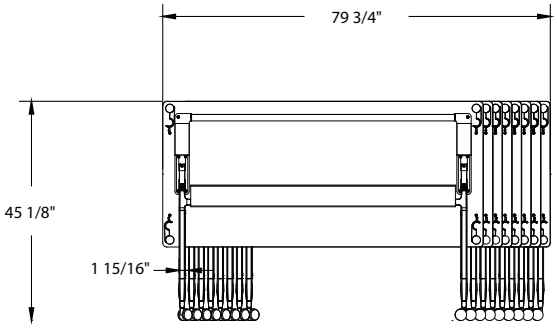

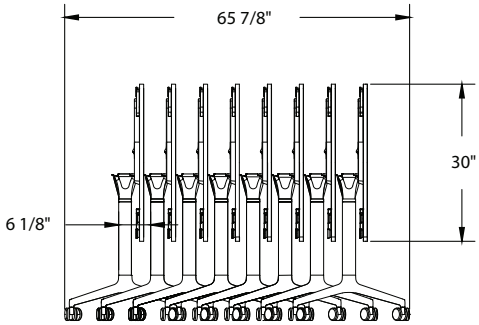

C-Leg nesting

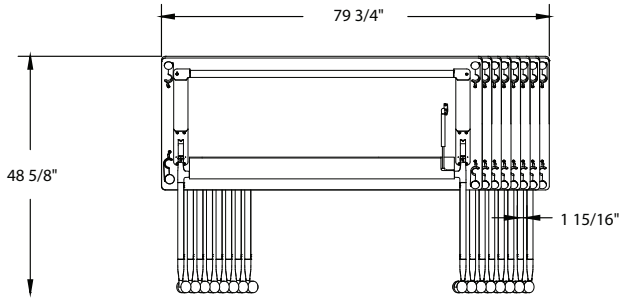

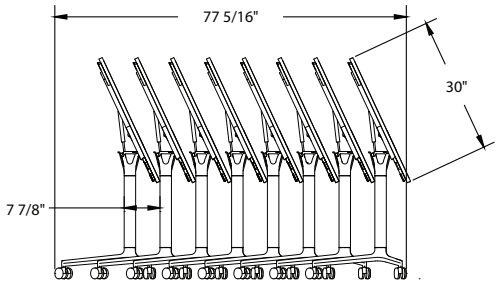

Modesty Panel Examples

Edge Base Modesty Panel

C-Leg shown below

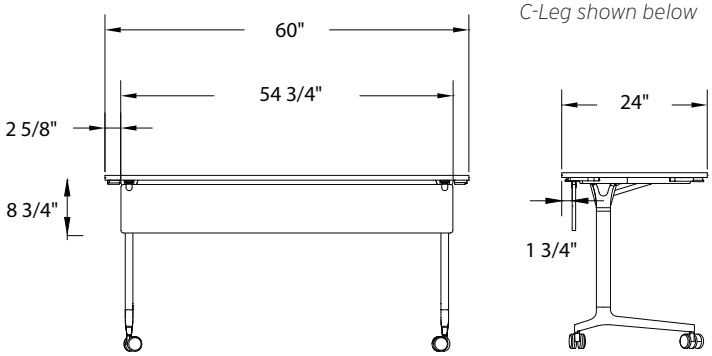

Inset Base Modesty Panel

T-Leg shown below

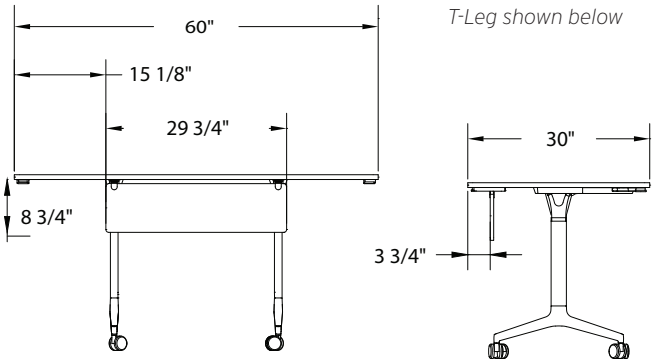

Release Mechanism

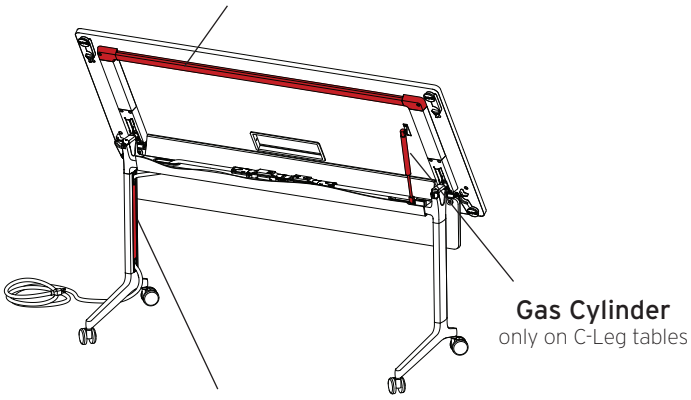

Gas Cylinder
only on C-Leg tables

Vertical Wire Management

TECHNIQ Table Series

Rectangle Top with T-Leg Inset Base

Rectangle Top with T-Leg Edge Base

Semicircle Top with C-Leg Base

Trapezoid Top with C-Leg Base

TQ-CHCA
Chrome and Black Caster

TQ-MGCA
Mid Grey Caster

TQ-BLCA
Black Caster

T-Leg Edge Base nesting

TECHNIQ Table Series

Ash Veneer

30 Vanilla Ash

31 Natural Ash

32 Sand Ash

33 Toasted Ash

Oak Veneer

10 Alabaster White Oak

11 Light Oak

12 Golden Oak

13 Harvest Oak

14 Slate Oak

15 Mineral Grey Oak

16 Dark Oak

Walnut Veneer

20 Clear Walnut

21 Light Grey Walnut

22 Classic Walnut

23 Mocha Walnut

24 Midnight Walnut

Modesty Panel Felt

Grey

TECHNIQ Table Series

FENIX® Innovative Materials

Bianco Kos
Grigio Efeso
Grigio Antrim
Grigio Bromo
Beige Arizona
Grigio Londra
Cacao Orinoco
Rosso Jaipur

Blu Shaba
Blu Fes
Verde Kitami
Verde Comodoro
Nero Ingo

All Fenix have ABS Edgebands to match top.

Standard Laminates

Solids

Brite White*
459-58

Classic White*
9244-58

Folkstone*
927-58

Mouse*
928-58

Storm*
912-58

Platinum*
902-58

Citadel*
1097-58

Black*
909-58

Woodgrains

White Ash++
8841-26

Buff Elm++
5793-26

Ashwood Beige++
5785-26

Silver Riftwood++
6413-26

Natural Ash*
8843-26

Finnish Oak*
118-26

Formal Walnut*
5782-26

Nut Brown Cherry*
5790-26

Graphite Elm++
5796-26

All Laminates with * have ABS Edgebands to match top.

All Laminates with ++ must have a solid color edgeband selected.

Powder Coats

Neutral Powder Coats

-01 Matte White
-02 Light Grey
-03 Mid Grey
-04 Steel
-05 Matte Black

Pearl Powder Coats

-20 Matte Silver
-21 Light Anthracite
-22 Anthracite
-23 Champagne
-24 Light Bronze
-25 Bronze

Fenix Powder Coats - *color matched to FENIX®*

-40 Grigio Efeso
-41 Grigio Antrim
-42 Grigio Bromo
-43 Beige Arizona
-44 Grigio Londra
-47 Blu Shaba
-45 Blu Fes
-48 Verde Kitami
-46 Verde Comodoro
-49 Cacao Orinoco
-50 Rosso Jaipur

Color Trend Powder Coats

-73 Ivory
-60 Stone
-61 Light Tan
-62 Sand
-63 Ice
-64 Fog
-65 Teal
-66 Mustard
-67 Light Sage
-68 Moss
-69 Dark Green
-70 Rosa
-71 Terracotta
-72 Burgundy

TECHNIQ Table Series

Conference Configuration
C-Leg Base - 30″ x 66″ Table

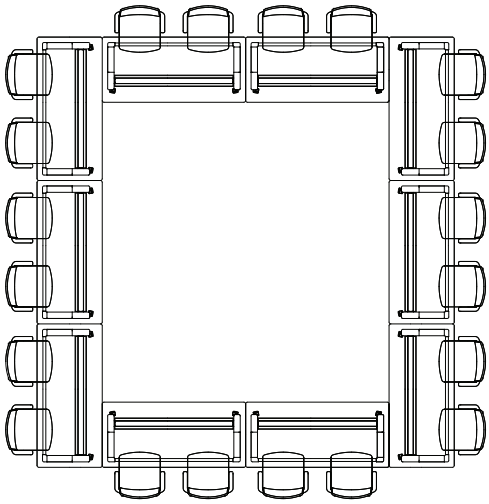

Seminar Configuration
C-Leg Base - 30″ x 66″ Table
30″ x 60″ Trapezoid Table

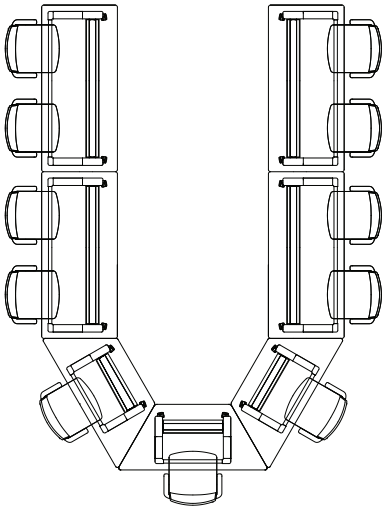

Training Configuration
C-Leg Base - 30″ x 66″ Table
30″ x 60″ Trapezoid Table

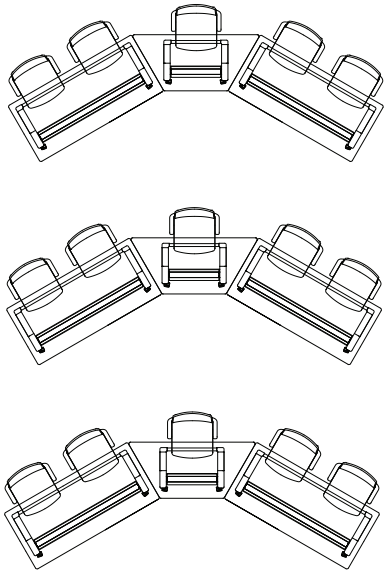

Round Configuration
C-Leg Base - 36″ x 72″ Semicircle Table

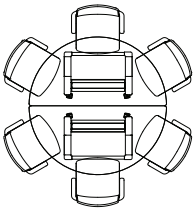

Meeting Configuration
T-Leg *Inset* Base - 30″ x 60″ Table

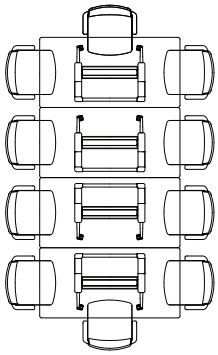

Race Track Configuration
C-Leg Base - 30″ x 66″ Table
30″ x 30″ Quarter Round Top

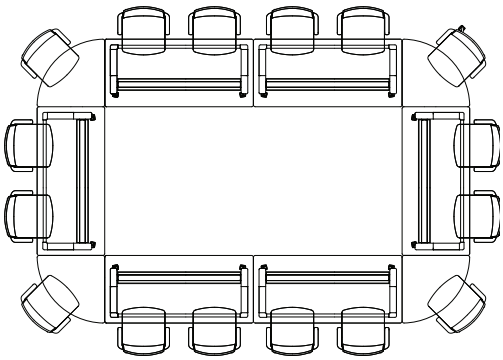

TECHNIQ Table Series

Example: item number TQ-1260 + top material suffix -OA + metal suffix -CH = TQ-1260-OA-CH

T-Leg Edge Base Training Table

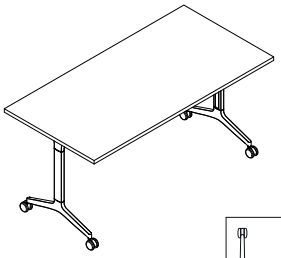

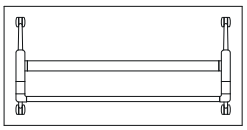

	Item	Description	d	w	h	List Price *Surface Material* -AA (veneer) -CH	-AA (veneer) -PC	-OA (veneer) -CH	-OA (veneer) -PC	-WW (veneer) -CH	-WW (veneer) -PC	-LAM (laminate) -CH	-LAM (laminate) -PC	-FX (fenix lam.) -CH	-FX (fenix lam.) -PC
	TQ-1260	30" x 60" Rectangle Top	30	60	29	3414	3619	3414	3619	3455	3659	3180	3385	3718	3923
	TQ-1266	30" x 66" Rectangle Top	30	66	29	3523	3725	3523	3725	3579	3780	3275	3477	3765	3967
	TQ-1272	30" x 72" Rectangle Top	30	72	29	3634	3836	3634	3836	3691	3893	3395	3598	3929	4132
	TQ-1360	36" x 60" Rectangle Top	36	60	29	3590	3795	3590	3795	3646	3851	3306	3511	3846	4050
	TQ-1366	36" x 66" Rectangle Top	36	66	29	3716	3919	3716	3919	3780	3982	3334	3536	3920	4122
	TQ-1372	36" x 72" Rectangle Top	36	72	29	3858	4060	3858	4060	3920	4121	3543	3744	4182	4383
	TQ-1378	36" x 78" Rectangle Top	36	78	29	4003	4205	4003	4205	4071	4274	3641	3844	4330	4533

If power is required see pages 15 - 16 to specify

Required to Specify

Caster Option: **TQ-BLCA** Black Caster
TQ-MGCA Mid Grey Caster
TQ-CHCA Black and Chrome Caster

Metal Finish : Chrome, or see powder coat options on ***page 7 - MUST SPECIFY CHROME -CH OR POWDER COAT -PC FINISH ON BASE***

Table Finishes : See ***pages 4 & 5*** for top finish options.

TECHNIQ Table Series

Example: item number **TQ-2260** **+** top material suffix **-OA** + metal suffix **-CH** = **TQ-2260-OA-CH**

T-Leg Inset Base Training Table

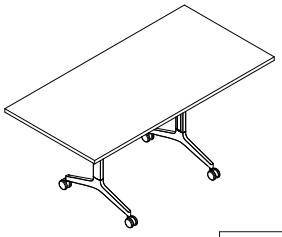

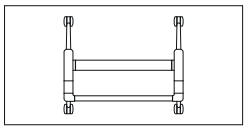

Item	Description	d	w	h	List Price — Surface Material: -AA (veneer) -CH	-AA (veneer) -PC	-OA (veneer) -CH	-OA (veneer) -PC	-WW (veneer) -CH	-WW (veneer) -PC	-LAM (laminate) -CH	-LAM (laminate) -PC	-FX (fenix lam.) -CH	-FX (fenix lam.) -PC
TQ-2260	30" x 60" Rectangle Top	30	60	29	3227	3432	3227	3432	3268	3474	2989	3195	3529	3734
TQ-2266	30" x 66" Rectangle Top	30	66	29	3354	3556	3354	3556	3408	3610	3094	3297	3584	3786
TQ-2272	30" x 72" Rectangle Top	30	72	29	3472	3675	3472	3675	3525	3728	3181	3385	3715	3919
TQ-2360	36" x 60" Rectangle Top	36	60	29	3407	3610	3407	3610	3458	3661	3119	3322	3656	3859
TQ-2366	36" x 66" Rectangle Top	36	66	29	3549	3751	3549	3751	3609	3812	3228	3430	3815	4017
TQ-2372	36" x 72" Rectangle Top	36	72	29	3691	3894	3691	3894	3750	3954	3329	3533	3971	4174
TQ-2378	36" x 78" Rectangle Top	36	78	29	3870	4076	3870	4076	3938	4144	3476	3681	4167	4373

If power is required see pages 15 - 16 to specify

Required to Specify

Caster Option: **TQ-BLCA** Black Caster
TQ-MGCA Mid Grey Caster
TQ-CHCA Black and Chrome Caster

Metal Finish : Chrome, or see powder coat options on ***page 7 - MUST SPECIFY CHROME -CH OR POWDER COAT -PC FINISH ON BASE***

Table Finishes : See ***pages 4 & 5*** for top finish options.

TECHNIQ Table Series

Example: item number **TQ-3160** **+** top material suffix **-OA** + metal suffix **-CH** **=** **TQ-1360-OA-CH**

C-Leg Edge Base Training Table

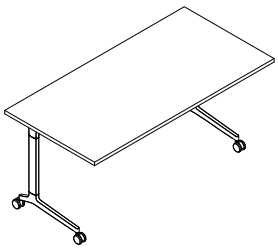

					List Price									
					Surface Material									
Item	Description	d	w	h	-AA (veneer)		-OA (veneer)		-WW (veneer)		-LAM (laminate)		-FX (fenix lam.)	
					-CH	-PC	-CH	-PC	-CH	-PC	-CH	-PC	-CH	-PC
TQ-3160	24" x 60" Rectangle Top	24	60	29	3484	3647	3484	3647	3526	3689	3213	3376	3716	3880
TQ-3166	24" x 66" Rectangle Top	24	66	29	3570	3733	3570	3733	3610	3774	3264	3427	3821	3985
TQ-3172	24" x 72" Rectangle Top	24	72	29	3673	3835	3673	3835	3713	3875	3342	3504	3944	4106
TQ-3260	30" x 60" Rectangle Top	30	60	29	3656	3819	3656	3819	3699	3863	3328	3492	3866	4029
TQ-3266	30" x 66" Rectangle Top	30	66	29	3765	3927	3765	3927	3821	3983	3410	3572	3901	4063
TQ-3272	30" x 72" Rectangle Top	30	72	29	3876	4041	3876	4041	3935	4099	3495	3659	4025	4189

If power is required see pages 15 - 16 to specify

Required to Specify

Caster Option: **TQ-BLCA** Black Caster
TQ-MGCA Mid Grey Caster
TQ-CHCA Black and Chrome Caster

Metal Finish : Chrome, or see powder coat options on ***page 7 - MUST SPECIFY CHROME -CH OR POWDER COAT -PC FINISH ON BASE***

Table Finishes : See ***pages 4 & 5*** for top finish options.

TECHNIQ Table Series

Example: item number TQ-4260 + top material suffix -OA + metal suffix -CH = TQ-4260-OA-CH

C-Leg Inset Base Training Table

Item	Description	d	w	h	List Price — Surface Material: -AA (veneer) -CH	-AA (veneer) -PC	-OA (veneer) -CH	-OA (veneer) -PC	-WW (veneer) -CH	-WW (veneer) -PC	-LAM (laminate) -CH	-LAM (laminate) -PC	-FX (fenix lam.) -CH	-FX (fenix lam.) -PC
TQ-4260	30" x 60" Semicircle Top	30	60	29	3656	3819	3656	3819	3699	3863	3328	3492	3866	4029
TQ-4372	36" x 72" Semicircle Top	36	72	29	4100	4262	4100	4262	4163	4325	3625	3787	4270	4432

If power is required see pages 15 - 16 to specify

C-Leg Inset Base Training Table

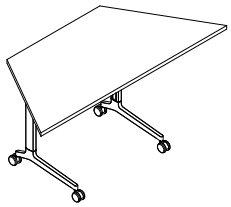

Item	Description	d	w	h	-AA (veneer) -CH	-AA (veneer) -PC	-OA (veneer) -CH	-OA (veneer) -PC	-WW (veneer) -CH	-WW (veneer) -PC	-LAM (laminate) -CH	-LAM (laminate) -PC	-FX (fenix lam.) -CH	-FX (fenix lam.) -PC
TQ-5060	30" x 60" Trapezoid Top	30	60	29	3656	3819	3656	3819	3699	3863	3328	3492	3866	4029
TQ-5672	36" x 72" Trapezoid Top	36	72	29	4100	4262	4100	4262	4163	4325	3625	3787	4270	4432

If power is required see pages 15 - 16 to specify

Required to Specify

Caster Option: **TQ-BLCA** Black Caster
TQ-MGCA Mid Grey Caster
TQ-CHCA Black and Chrome Caster

Metal Finish : Chrome, or see powder coat options on **page 7** - ***MUST SPECIFY CHROME -CH OR POWDER COAT -PC FINISH ON BASE***

Table Finishes : See ***pages 4 & 5*** for top finish options.

TECHNIQ Table Series

Example: item number TQ-6124 + top material suffix -OA = TQ-6124-OA

	Item	Description	d	w	List Price *Surface Material* -AA (veneer)	-OA (veneer)	-WW (veneer)	-LAM (laminate)	-FX (fenix lam.)
Quarter Round Joining Tops Training Table	TQ-6124	24" x 24" Quarter Top	24	24	474	474	487	388	531
	TQ-6230	30" x 30" Quarter Top	30	30	635	635	657	492	711
	TQ-6336	36" x 36" Quarter Top	36	36	832	832	867	614	920

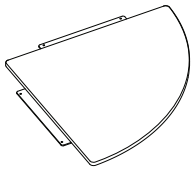

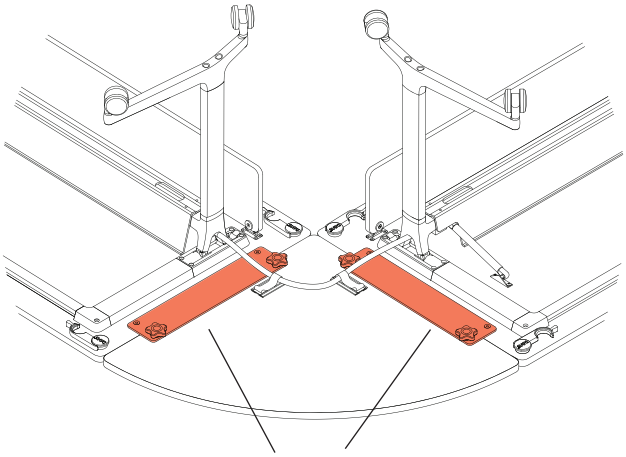

Joining Plates

When using a Quarter Round Joining Top, a flat plate and screw knobs are used to connect the Joining Top to the additional tables.

Required to Specify

Table Finishes : See ***pages 4 & 5*** for top finish options.

TECHNIQ Table Series

Example: item number TQ-160 + material suffix -OA = TQ-160-OA

Edge Base Modesty Panels C-Leg and T-Legs Versions

Item	Description	d	w	h	List Price *Modesty Panel Material* -AA (veneer)	-OA (veneer)	-WW (veneer)	-LAM (laminate)	-FL (felt)	-FX (fenix lam.)
TQ-160	All 60" Wide Edge Base Tables	1/2	54	8	490	490	497	484	405	604
TQ-166	All 66" Wide Edge Base Tables	1/2	60	8	518	518	528	499	465	641
TQ-172	All 72" Wide Edge Base Tables	1/2	66	8	548	548	558	524	435	671
TQ-178	All 78" Wide Edge Base Tables	1/2	72	8	579	579	597	553	465	735

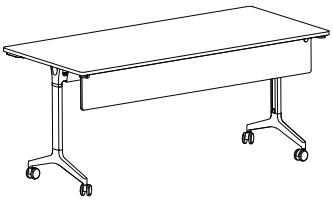

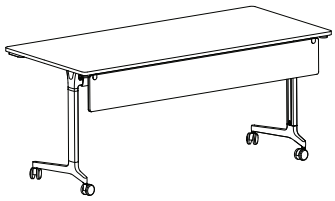

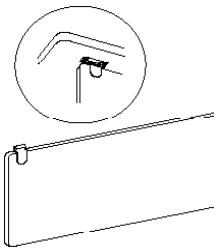

Inset Base Modesty Panels T-Leg Tables

Item	Description	d	w	h	-AA (veneer)	-OA (veneer)	-WW (veneer)	-LAM (laminate)	-FL (felt)	-FX (fenix lam.)
TQ-260	All 60" Wide Inset Base Tables	1/2	30	8	358	358	365	398	308	470
TQ-266	All 66" Wide Inset Base Tables	1/2	36	8	388	388	395	422	308	504
TQ-272	All 72" Wide Inset Base Tables	1/2	42	8	421	421	428	439	339	534
TQ-278	All 78" Wide Inset Base Tables	1/2	48	8	451	451	458	460	339	572

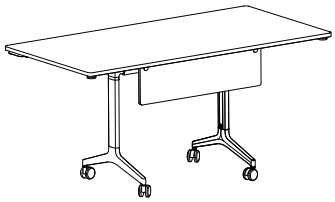

** Please note when ordering a modesty panel for* **TQ-5672,** *36" x 72" Trapezoid Top, you must use* **TQ-266.**

Required to Specify

Modesty Panel Finishes : See ***page 5*** for modesty panel finish options.

Electrical Overview

- In order to be UL Recognized (UL1286), all Starter cords must be fitted with 20amp plugs, in either straight or 90º end plugs.
- A maximum of 8 Duplex receptacles (16 outlets), allowed per base feed (circuit), which equates to 8 tables each having one Duplex receptacle.
- USB-A+C Dual Charging Units are not considered a receptacle and are not included in the total count of receptacles.
- The 4-Trac system is non-sequential.
- Corded infeeds are single circuit only. The maximum power draw is 20amps per single circuit.
- For customers that require a hardwired install, a 20amp hardwire infeed is available and must be installed by a licensed electrician.
- Hardwired infeeds can be installed at the wall or floor.
- Hardwired infeeds are available in a Flexible Metal Conduit.

New York City, San Francisco, and Chicago have specific requirements for the use of manufactured wiring systems. Please contact an electrician for local code requirements.

Usable Cord Lengths

The Usable Cord Length chart shows the length of usable cord from the base of the leg to the plug.

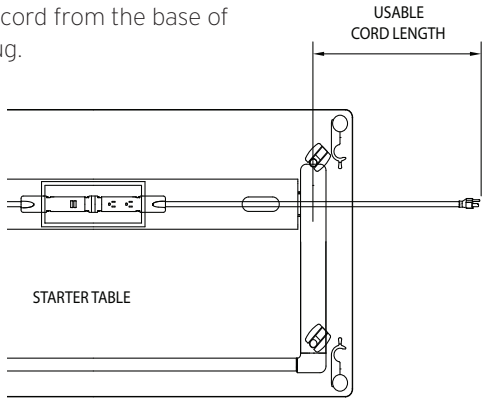

- **Example:** if the table length is 60" and a 72" power infeed starter cord is ordered, the usable cord length from the leg to the outlet is 29".

	Usable Cord Length			
	Table Length	72" Power Infeed	96" Power Infeed	120" Power Infeed
T-Leg (Edge Base)	60"	29"	53"	77"
	66"	26"	50"	74"
	72"	23"	47"	71"
	78"	20"	44"	68"
T-leg (Inset Base)	60"	40"	64"	88"
	66"	37"	61"	85"
	72"	34"	58"	82"
	78"	31"	55"	79"
C-leg (Edge Base)	60"	29"	53"	77"
	66"	26"	50"	74"
	72"	23"	47"	71"
Trapazoid	60"	40"	64"	88"
	72"	37"	61"	85"
Semicircle	60"	40"	64"	88"
	72"	34"	58"	82"

Power Box Location

T-Leg Table Top

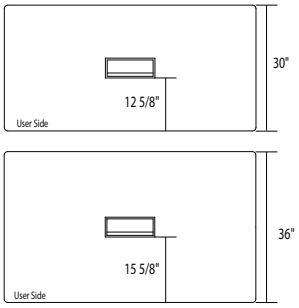

C-Leg Table Top

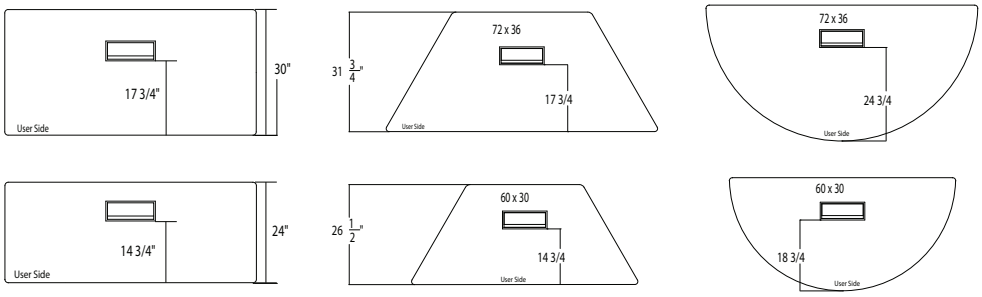

Power Box

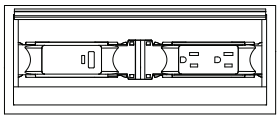

Item	Description	List Price
DRCU-S	Duplex Receptacle and 2 Charging USB-A+C outlets with Access Lid	791

Must specify Anodized Aluminum or Matte Black Access Lid

Starter Cord

Item	Description	List Price	
HWI-1	72" 20 Amp Hardwire Power Infeed	194	
HWI-2	96" 20 Amp Hardwire Power Infeed	231	
HWI-3	120" 20 Amp Hardwire Power Infeed	271	
SPI15-1	72" Straight Power Infeed with Plug 15 Amp	259	Plug View Not UL Recognized
SPI15-2	96" Straight Power Infeed with Plug 15 Amp	277	
SPI15-3	120" Straight Power Infeed with Plug 15 Amp	340	
SPI20-1	72" Straight Power Infeed with Plug 20 Amp	330	Plug View UL Recognized
SPI20-2	96" Straight Power Infeed with Plug 20 Amp	428	
SPI20-3	120" Straight Power Infeed with Plug 20 Amp	465	
API15-1	72" 90º Angle Power Infeed with Plug 15 Amp	279	Plug View Not UL Recognized
API15-2	96" 90º Angle Power Infeed with Plug 15 Amp	308	
API15-3	120" 90º Angle Power Infeed with Plug 15 Amp	553	
API20-1	72" 90º Angle Power Infeed with Plug 20 Amp	330	Plug View UL Recognized
API20-2	96" 90º Angle Power Infeed with Plug 20 Amp	374	
API20-3	120" 90º Angle Power Infeed with Plug 20 Amp	604	

Connector Cord

Item	Description	List Price
CONC50	50" Connector Cord	160
CONC52	52" Connector Cord	164
CONC56	56" Connector Cord	169
CONC58	58" Connector Cord	174
CONC62	62" Connector Cord	181
CONC64	64" Connector Cord	184
CONC68	68" Connector Cord	190
CONC76	76" Connector Cord - *when using Joining tops*	204
CONC80	80" Connector Cord - *when using Joining tops*	212
CONC90	90" Connector Cord - *when using Joining tops*	227
CONC96	96" Connector Cord - *when using Joining tops*	236

When specifying a Connector Cord use the chart provided.
If Joining tops are included please contact factory for correct cord length.

- **Example:** if a *60"* table is to be connected to a *66"* table **CONC52** should be specified.

Connector Cord Length
(in green below indicates like tables to like tables)

Table Length	60"	66"	72"	78"
60"	CONC50	CONC52	CONC56	CONC58
66"	CONC52	CONC56	CONC58	CONC62
72"	CONC56	CONC58	CONC62	CONC64
78"	CONC58	CONC62	CONC64	CONC68