DISCLAIMER

Statement of Passing Over: This information has been supplied by the vendor or the vendor's agents and TRG Dunedin (powered by ownly Ltd licensed REAA 208) is merely passing over this information as supplied to us. We cannot guarantee its accuracy as we have not checked, audited, or reviewed the information and all intending purchasers are advised to conduct their own due diligence investigation into this information. Where you have been supplied with a Council Property File or a LIM Report, please note there may be matters relating to pre-1992 consents or permits in this file which may need further investigation in order to determine their relevance. To the maximum extent permitted by law we do not accept any responsibility to any party for the accuracy or use of the information herein.

Dunedin City Council – Land Information Memorandum

Property Address: 31 Owhiro Avenue Mosgiel

Prepared for: Brian Grove Spackman and Murray Gordon Wells
Prepared on: 06-Aug-2025

Property Details:

Property ID	5127958
Address	31 Owhiro Avenue Mosgiel
Parcels	LOT 56 DP 527844

Disclaimer:

Issued in accordance with Section 44A of the Local Government Official Information and Meetings Act 1987

Should you require further clarification of any of the information listed in this report, please phone our Customer Services Agency on 03 477 4000.

This Land Information Memoranda (LIM) has been prepared in accordance with Sections 44A, 44B, 44C, and 44D of the Local Government Official Information and Meetings Act 1987. It contains only information obtained from the records held by the Dunedin City Council as at 06-Aug-2025

The Dunedin City Council has not carried out an inspection of the land and/or buildings for the purposes of preparing this LIM. The Dunedin City Council records may not show illegal or unauthorised buildings or works on the land. Accordingly this report may not necessarily reflect the current status of the property. Examples of situations which affect the property but are not recorded in this report include: unauthorised work not known to Council and breaches of Consents or Licences that are not the subject of a formal Requisition or Notice. The applicant is solely responsible for ensuring that the land or any building or works on the land is suitable for a particular purpose. The applicant should check the Certificate(s) of Title as this report may not include information that is registered on the Certificate(s) of title. The Certificate(s) of title may record further information or obligations relating to the land.

Further information about this property may be available from other agencies such as the Otago Regional Council, Nova Gas, Telecom New Zealand (Chorus) or Delta Utility Services Limited.

DUNEDIN CITY COUNCIL | kaunihera a-rohe o Ōtepoti

Contents

Dunedin City Council – Land Information Memorandum 1
Property Address: 31 Owhiro Avenue Mosgiel 1
Prepared for: Brian Grove Spackman and Murray Gordon Wells 1
Prepared on: 06-Aug-2025 1
Property Details: 1
Disclaimer: 1
s44A(2)(a) Information identifying any special feature or characteristics of the land 4
District Plan Hazard Information 4
Other Natural Hazard Information 4
Flood Hazards 4
Land Stability Hazards 4
Coastal Hazards 5
Seismic Hazards 5
Other Natural Hazards 5
Otago Regional Council Hazard Information 5
Contaminated Site, Hazardous Substances and Dangerous Goods 5
Contaminated Site Information 5
Historic Dangerous Goods Licence(s) 5
Hazardous Substances 5
s44A(2)(b) Information on private and public stormwater and sewerage drains 6
Drainage 6
Foul Sewer and Waste Water 6
Public Sewer Sheets 6
Dunedin City Council Private Drainage plans incomplete 6
s44A(2)(bb) Information Council holds regarding drinking water supply to the land 6
Water Supply 6
s44A(2)(c) Information relating to any rates owing in relation to the land 7
Rates Details 7
Rates Assessment Details 7
s44A(2)(d) Consents, Certificates, Notices, Orders or Requisitions affecting the land or any buildings on the land 7
(da) the information required to be provided to a territorial authority under section 362T(2) of the Building Act 2004:s44A and 7
(2)(e) Information concerning any Certificate issued by a Building Certifier pursuant to the Building Act 1991 or the Building Act 2004 7
Building and Drainage Consents 8
Building and Drainage Permits 8
Building Notices 8
Resource Consents 8
Consent Notices 11
Alcohol Licensing 11
Health Licensing 11
s44A(2)(ea) Information notified under Section 124 of the Weathertight Homes Resolution Services Act 2006 11

s44A (2)(f) Information relating to the use to which the land may be put and any conditions attached to that use 11
District Plan 11
District Plan Map 13
s44A(2)(g) Information regarding the land which has been notified to Council by another statutory organisation 14
s44A(2)(h) Information regarding the land which has been notified to Council by any network utility operator pursuant to the Building Act 1991 or Building Act 2004 14
Section 44A(3) Information concerning the land as the authority considers, at its discretion, to be relevant. 14
Building Information 14
Foul Sewer and Waste Water 14
Minimum Floor Levels 15
Planning 15
Resource Consents within 50m of 31 Owhiro Avenue Mosgiel 15
3 Waters 26
Information Regarding Watercourses 26
Transport 27
Glossary of Terms and Abbreviations 28
Consent, Permit, Licence & Complaint types 28
Terms used in Permits & Consents 28
General terms 29
Appendices 30

DUNEDIN CITY COUNCIL | kaunihera a-rohe o Ōtepoti

s44A(2)(a) Information identifying any special feature or characteristics of the land

District Plan Hazard Information

Refer to District Plan for Natural Hazards Information section: s44A (2)(f) *Information relating to the use to which the land may be put and any conditions attached to that use*.Building Act 2004 Sec 73 Hazard Information

Other Natural Hazard Information

Flood Hazards

The following flood hazards have been identified:

The property is identified within the report "Minimum Floor Levels for Flood Vulnerable Areas" which seeks to establish minimum floor levels for flood vulnerable areas across the municipality. Although the report is known to the Dunedin City Council the council has not assessed the report for correctness. The applicant is solely responsible for ensuring that the land is suitable for a particular purpose including development. Please read the report here
https://2gp.dunedin.govt.nz/2gp/documents/Section32_Background_Documents/Natural_Hazards/Dunedin%20City%20Council,%20Minimum%20Floor%20Levels%20for%20Flood%20Vulnerable%20Areas%20(GHD,%20March%202015).pdf

Natural hazards on the Taieri Plains, Otago

This property has been identified as lying within Flood Hazard Area 22
The flood hazards in this area are derived from the Owhiro Stream and the hill tributaries on its southern side. Flood hazard is primarily associated with overland flow, and in some places, the presence of an active, floodwater dominant alluvial fan. This area is sufficiently elevated to not be affected by the Taieri River or the Silver Stream.
This information has been sourced from the ***Otago Regional Council Report (2012) Natural Hazards on the Taieri Plains, Otago***. Further details, including a copy of the report are available on their website:
https://www.orc.govt.nz/media/1722/flood-hazard-on-the-taieri-plain.pdf

Land Stability Hazards

The following land stability hazards have been identified:

Alluvial Fans - Active - Floodwater
The property is located within an area with active floodwater alluvial fans. Active fans are those on which flooding, deposition and/or erosion are possible within the next 500 years. This information has been sourced from ***Opus International Consultants (2009): Otago alluvial fans project regional review.*** Further information, including a copy of the report is available from https://www.orc.govt.nz/media/2968/otago-alluvials-project-regional-review-executive-summary.pdf
https://www.orc.govt.nz/media/2969/otago-alluvials-project-regional-review-council-committee-report.pdf

Coastal Hazards
No information.

Seismic Hazards
The following seismic hazards have been identified:

This area has been identified as lying within a zone susceptible to amplified shaking in an earthquake.

Other Natural Hazards
The following other natural hazards have been identified:

This property has been identified as being affected by active faults & folds GNS April 2021 seismic - fault proximity - Titri, Haz Id 12094.

Otago Regional Council Hazard Information
The Regional Council is required to provide information that it holds on Natural Hazards: https://www.orc.govt.nz/managing-our-environment/natural-hazards/otago-natural-hazards-database.

Contaminated Site, Hazardous Substances and Dangerous Goods
Contaminated Site Information
No information.

Historic Dangerous Goods Licence(s)
No information.

Hazardous Substances
No information.

WARNING – Change in legislation and management of hazardous substances
On 1 April 2004, all Dunedin City Council Dangerous Goods Licences expired. From this date they became the responsibility of the Environmental Protection Authority (EPA) under the Hazardous Substances and New Organisms Act 1996.

All new licences for hazardous substances were issued by independent Test Certifiers approved by the EPA. The Council no longer holds current information on the use of hazardous substances at these premises and hazardous substances may be present without the Council's knowledge.

The Council was advised by the EPA in 2016 that Worksafe had taken over responsibility for managing Location Test certificates under the Hazardous Substances and New Organisms Act 1996. The EPA no longer hold any information in relation to Location Test Certificates If you have any questions, please contact Worksafe.

s44A(2)(b) Information on private and public stormwater and sewerage drains

Drainage

Drainage plans on file are indicative only.
Obtaining your own independent review may be required before commencing drainage works.

Foul Sewer and Waste Water

Drainage Reticulation Plans
A copy of the Dunedin City Council's drainage infrastructure in the vicinity of the subject property is attached. Public foul sewers are show in red and stormwater sewers in green. All public drainage services are available to receive connections from the property and limited flows of stormwater may also be discharged to the street channel or an approved outfall.

Public Sewer Sheets

WARNING. Please note that public sewer reticulation sheets are scaled in either Imperial feet or Metric metres. Please check with the Duty Drainage Inspector if in doubt.

Dunedin City Council Private Drainage plans incomplete

WARNING. The Dunedin City Council's private drainage records (plans) prior to 1 January 1993 may be incomplete or not clearly recorded. Owners therefore are advised to carry out work with due care to avoid damage to any private drain not detailed because of the lack of information filed in the Council's records.

s44A(2)(bb) Information Council holds regarding drinking water supply to the land

Water Supply

Urban water supply area – Connected
This property is connected to the Dunedin City Council's urban (on-demand) water supply. Indicative water pressures are available to view at www.dunedin.govt.nz/water-pressure, and flows available to the property can be provided on request. Any change in water use (e.g. for a new commercial activity) requires a new application to be made to the Council. It is recommended that the applicant check the property for the location and suitability of the water service.

Terms and conditions of supply
All new and existing connections to the Dunedin City Council's water supply network are subject to the terms and conditions of the Dunedin City Council Water Bylaw 2011. The bylaw is available to view at www.dunedin.govt.nz/water-bylaw.

Water pressure
Indicative network water pressure to the property is shown on maps available at www.dunedin.govt.nz/water-pressure. Specific detail is available on request.

Water reticulation maps
A copy of the water reticulation map of Dunedin City Council infrastructure in the vicinity of the subject property is attached. These show the location of the water main in the road. It may or may not show the water service to the property. It is recommended that the applicant check the property

s44A(2)(c) Information relating to any rates owing in relation to the land

Rates Details

Rates Assessment Details

Rate Account	4029649
Address	31 Owhiro Avenue Mosgiel
Valuation Number	28020-11371
Latest Valuation Details	
Capital Value	$1,010,000
Land Value	$425,000
Value of Improvements	$585,000
Area (Hectares)	0.084HA
Units of Use	1
Current Rates	
Current Rating Year Starting	01-Jul-2025
Dunedin City Council Rates	$5,128.37
Rates Outstanding for Year	$3,907.82

For further explanation on the rate account, or to enquire about information referred to on this page, please contact Rates Staff between 8:30am and 5:00pm weekdays at the enquiries counter on the Ground floor of the Civic Centre, 50 The Octagon, Dunedin, or by phoning 477 4000.

s44A(2)(d) Consents, Certificates, Notices, Orders or Requisitions affecting the land or any buildings on the land

(da) the information required to be provided to a territorial authority under section 362T(2) of the Building Act 2004:s44A and

(2)(e) Information concerning any Certificate issued by a Building Certifier pursuant to the Building Act 1991 or the Building Act 2004

DUNEDIN CITY COUNCIL | kaunihera a-rohe o Ōtepoti

Building and Drainage Consents

The following consents are recorded for this property:

Status Key:			
	BC	-	Building Consent Issued
	CCC	-	Code Compliance Certificate Issued
	Archived /CCC Refused	-	In accordance with section 93(2)(b) of the Building Act, the consent was reviewed for code compliance after two years. Compliance with the Building Code could not be established and therefore the Code Compliance Certificate has been refused.
	Lapsed	-	Work has not commenced and no extension of time applied for within 12 months of date of consent issue. Consent is of no further effect

NOTE: This is not a comprehensive list of all building consent statuses

ABA-2019-851 Building Consent - Erect Dwelling with attached Garage, Install Freestanding Masport F3000 Heater

Lodgement Date	07-May-2019
Decision	Granted
Decision Date	05-Jun-2019
Current Status	**CCC Issued**
Previous Number *(Applications before 2007)*	

ABA-2021-2868 Building Consent - Install 3 Sumps and 1 Submersible Pump in Driveway

Lodgement Date	14-Dec-2021
Decision	Granted
Decision Date	14-Jan-2022
Current Status	**CCC Issued**
Previous Number *(Applications before 2007)*	

Building and Drainage Permits

There are no Building or Drainage Permits recorded for this property. In some instances permits may have been recorded as building consents, please also check the consent section of the LIM.

Building Notices

No Building Notices

Resource Consents

The following Resource Consent(s) are recorded for this property:

SUB-2014-91 - Subdivision Consent

Description	subdivision creating 82 residential lots, roading, stormwater management lot and balance area
Lodgement Date	27-Jun-2014
Decision	Granted
Decision Date	27-Feb-2015
Current Status	**Consent Superseded**

SUB-2014-91/A - Subdivision Consent

Description	s357 objection to fees
Lodgement Date	25-Mar-2015
Decision	S357 Upheld
Decision Date	02-Jun-2015
Current Status	**S357 Upheld**

SUB-2014-91/B - Subdivision Consent

Description	s127 change of conditions to SUB-2014-91 to create staged subdivision of 81 residential lots, with revised roading layout and additional lots with no access or frontage
Lodgement Date	18-May-2015
Decision	s127 Upheld
Decision Date	16-Jun-2015
Current Status	**Consent Superseded**

SUB-2014-91/3 - Subdivision Consent

Description	Stage 3
Lodgement Date	09-Jun-2015
Decision	Staged Subdivision
Decision Date	09-Jun-2015
Current Status	**s224c Issued**

SUB-2014-91/4 - Subdivision Consent

Description	Stage 4 - no longer occurring, refer SUB-2014-91/D
Lodgement Date	09-Jun-2015
Decision	Staged Subdivision
Decision Date	09-Jun-2015
Current Status	**Application Cancelled**

SUB-2014-91/C - Subdivision Consent

Description	variation of subdivision consent SUB-2014-91/B for the subdivision of 67 & 67A Gladstone Road North, 112 Hagart Alexander Drive and Esplanade Reserve by changing the road reserve status of new Lot 105
Lodgement Date	06-Nov-2015
Decision	s127 Upheld
Decision Date	30-Nov-2015
Current Status	**Consent Superseded**

SUB-2014-91/D - Subdivision Consent

Description	s127 variation of subdivision SUB-2014-91/c to revise scheme as two stage development of 76 residential lots, with consequential changes to roading and utility lots, and protection of stormwater overland flow paths
Lodgement Date	24-Feb-2017
Decision	s127 Upheld
Decision Date	09-Mar-2017
Current Status	**s224c Issued**

LUC-2014-323 - Land Use Consent

Description	land use consequential to subdivision SUB-2014-91 for a new lot with no access or frontage to legal road being Lot 104
Lodgement Date	27-Jun-2014
Decision	Granted
Decision Date	27-Feb-2015
Current Status	**Consent Superseded**

LUC-2015-389 - Land Use Consent

Description	to undertake earthworks for subdivision SUB-2014-91 and establish a culvert within a Landscape Conservation Area
Lodgement Date	31-Aug-2015
Decision	Granted
Decision Date	30-Sep-2015
Current Status	**Monitoring Commenced**

LUC-2014-323/A - Land Use Consent

Description	variation of land use consent LUC-2014-323, being a land use for new lots with no access or frontage to legal road at Lots 99, 103 and 104 consequential to SUB-2014-91/B
Lodgement Date	18-May-2015
Decision	s127 Upheld
Decision Date	16-Jun-2015
Current Status	**Consent Issued**

LUC-2015-389/A - Land Use Consent

Description	s357 objection to fees
Lodgement Date	03-Feb-2016
Decision	s357 Upheld in Part
Decision Date	16-Feb-2016
Current Status	**Completed**

BACT-2019-32 - Boundary Activity Notice

Description	deemed permitted boundary activity - eave breach
Lodgement Date	29-May-2019
Decision	Issued
Decision Date	05-Jun-2019
Current Status	**Completed**

LUC-2020-105 - Land Use Consent

Description	land use consent for the establishment of a retaining wall supporting cut on a boundary
Lodgement Date	27-Feb-2020
Decision	Granted
Decision Date	01-Apr-2020
Current Status	**Completed**

SUB-1988-354636 - Subdivision Consent

Description	Ref: 165/1 subdivision of Part Section 4 and Lot 1 DP 18347 Block II East Taieri Survey District
Lodgement Date	03-Nov-1988
Decision	Granted
Decision Date	26-Apr-1989
Current Status	**Consent Issued**

SUB-1982-384424 - Subdivision Consent

Description	Ref: SD 5/1 subdivision of Part Section 4 Block II East Taieri Survey District
Lodgement Date	06-Apr-1982
Decision	Granted
Decision Date	08-Sep-1982
Current Status	**Consent Issued**

Consent Notices

There are no Consent Notices recorded for this property. It is recommended that the applicant check the Record of Title for any notices or covenants that may affect the property.

Alcohol Licensing

There are no records of any Alcohol Licences for this property.

Health Licensing

There are no records of any Health Licences for this property.

s44A(2)(ea) Information notified under Section 124 of the Weathertight Homes Resolution Services Act 2006

No information.

s44A (2)(f) Information relating to the use to which the land may be put and any conditions attached to that use

District Plan

Dunedin currently has two district plans, and as at 19th August 2024, the partially operative Dunedin City Second Generation District Plan ("The 2GP") almost completely superceded the 2006 version of the District Plan. The exceptions where the 2GP has not yet replaced the 2006 Plan relate to two specific provisions and several areas still subject to appeal.

As a general principle, rules in the 2GP must be considered along with the rules of the Operative District Plan 2006, until such time as the rules of the 2GP become operative, or are treated as operative. The policies and objectives of both plans should also be considered.

The schedule of original appeals on the 2GP can be viewed at https://www.dunedin.govt.nz/council/district-plan/2nd-generation-district-plan/appeals-received-on-the-2gp.

The schedule of appeals on Variation 2 can be viewed at https://www.dunedin.govt.nz/council/district-plan/2nd-generation-district-plan/plan-change-dis-2021-1-variation-2

The 2GP is subject to change at any time. Plan Change 1 (Minor Improvements) to the 2GP was notified on Wednesday 20 November 2024. Rules that protect areas of significant indigenous vegetation or habitats of indigenous fauna, and that protect historic heritage, have immediate legal effect from notification of Plan Change 1. Once the initial submission period ends on 18 December 2024, rules that do not have submissions in opposition to them will be deemed operative. Please refer to our website for more information on Plan Change 1 at http://www.dunedin.govt.nz/2gp-plan-change-1 .

You should check with the Council whether any changes have occurred since the date this LIM report was issued. **The information provided with this LIM on district plan requirements is applicable as at the date this LIM is issued:** there may be changes to the district plan rules following the release of this LIM that may affect this site and surrounding properties.

You should ensure that you consult the information and relevant planning maps in the Operative District Plan which can be found on our website at https://www.dunedin.govt.nz/council/district-plan/district-plan-2006 and the 2GP which can be found on our website at https://www.dunedin.govt.nz/council/district-plan/2nd-generation-district-plan as well as at all Dunedin City Council service centres and libraries.

OPERATIVE DISTRICT PLAN INFORMATION

Zoning

This property is zoned as follows in the District Plan.

Zone

RESIDENTIAL 1

Noise

This property is located in a Noise Area where the noise limits outlined below apply. Rule 21.5.1(i)(b) also specifies a maximum noise limit of 75 dBA Lmax between 9.00 pm on any night and 7.00 am the following day measured at the boundary of the site or within any other site. Note that some activities have a resource consent or existing use rights that allow these limits to be exceeded. Some activities are also exempted from noise limits. Furthermore, the actual limits that apply will also depend on whether this site adjoins a Noise Area Boundary and whether there are Special Audible Characteristics. Refer to Section 21.5 of the District Plan for further details. Every occupier of land is also under a general duty to adopt the best practicable option to ensure that the emission of noise from land does not exceed a reasonable level.

Noise Zone

50Dt/35Nt dBA, 45SP dBA

Designations on Adjoining Property/Road
This property adjoins a property/road that is subject to the designations below. Refer to the Planning Maps and Schedule 25.5 of the District Plan for more information. Contact Planning staff should you wish to know the exact nature of the conditions applying to the designation.

Desig. No.	*Authority*	*Name and Purpose*	*Conditions*
D419	New Zealand Railways Corporation	Main South Railway - "Railway Purposes"	Yes

Designation 274 - Dunedin International Airport Approach and Land Use Controls
This property is within or partly within the designated take-off and approach fan for the Dunedin International Airport (Designation 274). Refer to Planning Map 72 for the land use controls that apply in relation to this designation.

Form Air

Approach Fan

SECOND GENERATION PLAN INFORMATION

Zoning
- General Residential 1 (refer Section 15, Residential)

Scheduled Items
- Dunedin Airport Flight Fan Designation

Overlay Zones
- Hazard 3 (flood) Overlay Zone (part)
- Hazard 3 (alluvial fan) Overlay Zone (part)

Mapped Areas
- Road Classification Hierarchy (main roads within 30m of site)
  - Gladstone Rd North is a Collector road

[Please note that some of the items above may only extend over part of the property. If there are multiple designations over the property, these may overlap.]

District Plan Map
The District Plan map is available online here. Instructions on how to use the map are available here.

You can also access the District Plan map and instructions by visiting the Dunedin City Council 2GP Website at:
https://www.dunedin.govt.nz/council/district-plan/2nd-generation-district-plan

s44A(2)(g) Information regarding the land which has been notified to Council by another statutory organisation

No information.

s44A(2)(h) Information regarding the land which has been notified to Council by any network utility operator pursuant to the Building Act 1991 or Building Act 2004

No information.

Section 44A(3) Information concerning the land as the authority considers, at its discretion, to be relevant.

Building Information

Foul Sewer and Waste Water

Restrictions near Council infrastructure

There is Dunedin City Council water infrastructure located within the boundaries of this property, as shown on the attached reticulation plans.

Relevant deposited plans, certificates of title and memoranda of transfer at Land Information New Zealand (www.linz.govt.nz) should be reviewed for information relating to any existing registered easements. However, as the Local Government Act 2002 (LGA) provides statutory rights for public infrastructure, easements are not always registered.

No building or structure shall be constructed within 2.5 metres of any Council-owned underground infrastructure, or as specified on any registered easement, without the written approval of the Council.

Infrastructure shall not be damaged or otherwise interfered with. Prior to commencing any works within the subject property, all Council-owned structures, mains and service pipes, and associated fittings are to be located on-site and, if necessary, protected.

The Council can enter the land to inspect, alter, renew, repair or clean its infrastructure under the LGA. For planned works, reasonable notice will be given.

Within new land subdivisions the Council requires an easement in gross over public water supply infrastructure. The easement in gross must be a minimum of 3 metres wide, centred on the as-built position, and made in accordance with the Dunedin Code of Subdivision and Development 2010: Section 6.3.10.3 (Water).

Planting near infrastructure should be avoided, particularly large trees or other species whose roots could cause damage.

Minimum Floor Levels

Clause E1.3.2 of the New Zealand Building Code requires that surface water, resulting from an event having a 2% probability of occurring annually, shall not enter buildings. This requirement applies to Housing, Communal Housing, Communal Residential and Communal non-residential buildings. For guidance when establishing minimum floor levels please refer to : https://www.dunedin.govt.nz/services/building-services/minimum-floor-levels and for links to specific areas: https://www.dunedin.govt.nz/services/building-services/minimum-floor-levels/mfl-guidance

For further explanation on the current status of any consent, or to enquire about information referred to on this page, please contact Building Control Staff between 8:30am and 5:00pm weekdays at the enquiries counter on the Ground floor of the Civic Centre, 50 The Octagon, Dunedin, or by phoning 477 4000.

Planning

Resource Consents within 50m of 31 Owhiro Avenue Mosgiel

689 R Gladstone Road Nth Mosgiel

RMA-1996-359995 Resource Management Act (Historical Data) ELECTION SIGNS (Non-Notified - Unrestricted Discretionary). The outcome was Granted on 29/08/1996.

RMA-1996-359930 Resource Management Act (Historical Data) ELECTION SIGNS (Non-Notified - Unrestricted Discretionary). The outcome was Granted on 15/08/1996.

5048710 104 Gladstone Road Nth Mosgiel

RMA-2003-366674 Resource Management Act (Historical Data) SUBDIVIDE THE PROPERTY INTO 2 ALLOTMENTS LOT 1= 1000M2, LOT 2 1555M2 (Non-Notified - Restricted Discretionary). The outcome was Granted on 03/07/2003.

RMA-1994-356460 Resource Management Act (Historical Data) Ownr:BA & VA FERRIER / App: BA & VA FERRIER (Non-Notified - Non Complying). This consent has since Lapsed.

5048921 67B Gladstone Road Nth Mosgiel

LUC-2025-221 Land Use Consent Large scale earthworks for a retirement village. There has been no outcome yet.

LUC-2025-220 Land Use Consent Construct and operate a retirement village - 279 one, two and three bedroom single level villa units and the main building will house 20 assisted living suites, 20 hospital level care beds and 10 care suites. There has been no outcome yet.

LUC-2018-40 Land Use Consent to undertake earthworks on the site. The outcome was Granted on 15/02/2018.

RMA-1992-351332 Resource Management Act (Historical Data) Section 226 certificate to facilitate freeholding of existing perpetual leases for Lots 9, 10, 29, 30 & 35 DP 254 Ownr:DCC / App: N.J. Dunckley PO Box 5045 (Non-Notified - Non Complying). The outcome was Granted on 10/09/1992.

RMA-1992-351307 Resource Management Act (Historical Data) Section 226 certification for Lots 9, 10, 29, 30 & 35 DP 254 Ownr:DCC / App: N.J. Dunckley PO Box 5045 (Non-Notified - Non Complying). The outcome was Granted on 18/06/1992.

5108925 LOT 3 Dunedin - Tranzrail (N/R) Dunedin

LUC-2021-88 Land Use Consent To undertake additional earthworks in association with the construction of the shared pathway route from St Leonards to Port Chalmers. The outcome was Granted on 11/05/2021.

LUC-2018-371 Land Use Consent alterations to the Otago Harbour Wall, earthworks (including earthworks in a coastal habitat) and construction of a boardwalk (to the extent that is not within the coastal marine area) associated with the shared cycling and pedestrian path. The outcome was Granted on 21/09/2018.

LUC-2017-14 Land Use Consent construction of the St Leonards to Port Chalmers Shared Pathway at Various Sites along the St Leonards to Port Chalmers Shared Pathway Route. The outcome was Granted on 11/04/2017.
LUC-2013-99 Land Use Consent mural on retaining wall. The outcome was Granted on 02/04/2013.
SUB-2011-61 Subdivision Consent amalgamation subdivision - subdivide railway land at Burnside into an industrial lot and a balance lot. The outcome was Granted on 15/07/2011.
RMA-2006-370524 Resource Management Act (Historical Data) construct and operate a self-service fuel facility. The outcome was Granted on 29/10/2007.
RMA-2001-364796 Resource Management Act (Historical Data) ESTABLISH CAR PARK (Non-Notified - Non Complying). The outcome was Granted on 06/06/2001.
RMA-2004-368439 Resource Management Act (Historical Data) CREATE A THREE LOT INDUSTRIAL 1 SUBDIVISION (Non-Notified - Restricted Discretionary). The outcome was Granted on 02/12/2004.
RMA-2001-365039 Resource Management Act (Historical Data) ALTER SIGNS/HOARDINGS (Non-Notified - Non Complying). The outcome was Granted on 11/10/2001.
RMA-2001-365038 Resource Management Act (Historical Data) ALTER SIGNS/HOARDINGS (Non-Notified - Non Complying). The outcome was Granted on 11/10/2001.
RMA-2001-365037 Resource Management Act (Historical Data) ALTER SIGNS/HOARDINGS (Non-Notified - Non Complying). The outcome was Granted on 11/10/2001.
RMA-2001-365036 Resource Management Act (Historical Data) ALTER SIGNS/HOARDINGS (Non-Notified - Non Complying). The outcome was Granted on 11/10/2001.
RMA-2001-365035 Resource Management Act (Historical Data) ALTER SIGNS/HOARDINGS (Non-Notified - Non Complying). The outcome was Granted on 11/10/2001.
RMA-2001-365034 Resource Management Act (Historical Data) ALTER SIGNS/HOARDINGS (Non-Notified - Non Complying). The outcome was Granted on 11/10/2001.
RMA-2002-366126 Resource Management Act (Historical Data) CERTIFICATE OF COMPLIANCE (Other). The outcome was Granted on 04/12/2002.
RMA-1999-362972 Resource Management Act (Historical Data) MURAL FOR WILKIE ROAD/NEVILLE ROAD TRANZ RAIL BRIDGE (Non-Notified - Restricted Discretionary). The outcome was Granted on 20/08/1999.
RMA-1993-357917 Resource Management Act (Historical Data) Subdivision Ownr:NZ RAILWAYS CORP. / App: K.G. Harford Private Bag (Non-Notified - Non Complying). The outcome was Granted on 18/11/1993.
RMA-1997-361305 Resource Management Act (Historical Data) VARIATION TO SUBDIVISION CONSENT AND EXTENSION OF TIME FOR SUBDIVISION OF LOT 1 DP 25158 (Non-Notified - Unrestricted Discretionary). The outcome was Granted on 13/10/1997.
RMA-1991-350984 Resource Management Act (Historical Data) Report Ownr:RAILWAYS (Non-Notified - Non Complying). The outcome was Granted on 24/05/1991.
RMA-1993-355755 Resource Management Act (Historical Data) Subdivision for disposal of surplus railway land App: WORKS CONSULTANCY (Non-Notified - Non Complying). The outcome was Granted on 25/06/1993.

5116885 R Prudence Place Mosgiel
LUC-2008-457/B Land Use Consent Section 127 variation of conditions. The outcome was s127 Upheld on 18/05/2009.
SUB-2008-124/B Subdivision Consent S127 variation to Third Stage of Gladstone Oaks subdivision. The outcome was s127 Upheld on 18/05/2009.
SUB-2008-124/A Subdivision Consent s357 objection to conditions of the Third Stage of Gladstone Oaks subdivision. The outcome was S357 Upheld on 15/12/2008.
LUC-2008-457 Land Use Consent Create a road in association with a subdivision. The outcome was Granted on 20/10/2008.

SUB-2008-124 Subdivision Consent Third Stage of Gladstone Oaks subdivision creating 24 residential lots. The outcome was Granted on 20/10/2008.

5116950 98 Gladstone Road Nth Mosgiel
SUB-2008-124/B Subdivision Consent S127 variation to Third Stage of Gladstone Oaks subdivision. The outcome was s127 Upheld on 18/05/2009.
SUB-2008-124/A Subdivision Consent s357 objection to conditions of the Third Stage of Gladstone Oaks subdivision. The outcome was S357 Upheld on 15/12/2008.
SUB-2008-124 Subdivision Consent Third Stage of Gladstone Oaks subdivision creating 24 residential lots. The outcome was Granted on 20/10/2008.
RMA-2003-366345 Resource Management Act (Historical Data) GARAGE WITHIN SIDE YARD & HEIGHT PLANE (Non-Notified - Restricted Discretionary). The outcome was Granted on 11/03/2003.

5116951 100 Gladstone Road Nth Mosgiel
SUB-2008-124/B Subdivision Consent S127 variation to Third Stage of Gladstone Oaks subdivision. The outcome was s127 Upheld on 18/05/2009.
SUB-2008-124/A Subdivision Consent s357 objection to conditions of the Third Stage of Gladstone Oaks subdivision. The outcome was S357 Upheld on 15/12/2008.
SUB-2008-124 Subdivision Consent Third Stage of Gladstone Oaks subdivision creating 24 residential lots. The outcome was Granted on 20/10/2008.
SUB-2007-228 Subdivision Consent Gladstone View Residential 6 subdivision creating 16 residential lots. The outcome was Granted on 16/04/2008.
RMA-2004-368140 Resource Management Act (Historical Data) OBJECTION TO CONDITIONS OF RMA20040392 (Other). The outcome was Granted on 15/12/2004.
RMA-2005-369461 Resource Management Act (Historical Data) SECOND VARIATION TO CONDITIONS OF RMA20050222 (Other). The outcome was Granted on 23/09/2005.
RMA-2006-370648 Resource Management Act (Historical Data) VARIATION TO CONDITIONS OF SECOND STAGE OF GLADSTONE OAKS SUBDIVISION (ESSENTIALLY FOURTH VARIATION TO RMA20050222) (Non-Notified - Non Complying). The outcome was Granted on 16/11/2006.
RMA-2005-369206 Resource Management Act (Historical Data) VARIATION TO CONSENT CONDITIONS OF RMA20050222 (Other). The outcome was Granted on 06/07/2005.
RMA-2005-368843 Resource Management Act (Historical Data) STAGES 1 AND 2 GLADSTONE OAKS SUBDIVISION (STAGE 3 PROCEEDED UNDER A SEPARATE CONSENT) stg1- DP 343774 stg2-DP 378589 (Other). The outcome was Granted on 08/06/2005.
RMA-2006-370924 Resource Management Act (Historical Data) S127 REQUEST TO ALTER CONDITIONS (ESSENTIALLY FIFTH VARIATION TO RMA20050222). The outcome was s127 Upheld on 19/12/2006.
RMA-2006-370223 Resource Management Act (Historical Data) VARIATION TO ADDRESS MINOR CHANGES (ESSENTIALLY THIRD VARIATION OF RMA20050222) (Other). The outcome was Granted on 04/07/2006.

5126366 R Owhiro Avenue Mosgiel
RMA-1998-361995 Resource Management Act (Historical Data) Erect carport over maximum site coverage cheque/WW & WD Lamond (Non-Notified - Restricted Discretionary). The outcome was Granted on 15/05/1998.

5126378 26 Owhiro Avenue Mosgiel
SUB-1982-384424 Subdivision Consent Ref: SD 5/1 subdivision of Part Section 4 Block II East Taieri Survey District. The outcome was Granted on 08/09/1982.
SUB-1988-354636 Subdivision Consent Ref: 165/1 subdivision of Part Section 4 and Lot 1 DP 18347 Block II East Taieri Survey District. The outcome was Granted on 26/04/1989.

SUB-2014-91/D Subdivision Consent s127 variation of subdivision SUB-2014-91/c to revise scheme as two stage development of 76 residential lots, with consequential changes to roading and utility lots, and protection of stormwater overland flow paths. The outcome was s127 Upheld on 09/03/2017.
LUC-2015-389/A Land Use Consent s357 objection to fees. The outcome was s357 Upheld in Part on 16/02/2016.
SUB-2014-91/C Subdivision Consent variation of subdivision consent SUB-2014-91/B for the subdivision of 67 & 67A Gladstone Road North, 112 Hagart Alexander Drive and Esplanade Reserve by changing the road reserve status of new Lot 105. The outcome was s127 Upheld on 30/11/2015.
LUC-2015-389 Land Use Consent to undertake earthworks for subdivision SUB-2014-91 and establish a culvert within a Landscape Conservation Area. The outcome was Granted on 30/09/2015.
SUB-2014-91 Subdivision Consent Stage 2. The outcome was Staged Subdivision on 27/02/2015.
LUC-2014-323/A Land Use Consent variation of land use consent LUC-2014-323, being a land use for new lots with no access or frontage to legal road at Lots 99, 103 and 104 consequential to SUB-2014-91/B. The outcome was s127 Upheld on 16/06/2015.
SUB-2014-91/B Subdivision Consent s127 change of conditions to SUB-2014-91 to create staged subdivision of 81 residential lots, with revised roading layout and additional lots with no access or frontage. The outcome was s127 Upheld on 16/06/2015.
SUB-2014-91/A Subdivision Consent s357 objection to fees. The outcome was S357 Upheld on 02/06/2015.
SUB-2014-91 Subdivision Consent subdivision creating 82 residential lots, roading, stormwater management lot and balance area. The outcome was Granted on 27/02/2015.
LUC-2014-323 Land Use Consent land use consequential to subdivision SUB-2014-91 for a new lot with no access or frontage to legal road being Lot 104. The outcome was Granted on 27/02/2015.

5126379 28 Owhiro Avenue Mosgiel
SUB-1982-384424 Subdivision Consent Ref: SD 5/1 subdivision of Part Section 4 Block II East Taieri Survey District. The outcome was Granted on 08/09/1982.
SUB-1988-354636 Subdivision Consent Ref: 165/1 subdivision of Part Section 4 and Lot 1 DP 18347 Block II East Taieri Survey District. The outcome was Granted on 26/04/1989.
BACT-2018-66 Boundary Activity Notice boundary activity consent for boundary infringement. The outcome was Issued on 24/10/2018.
SUB-2014-91/D Subdivision Consent s127 variation of subdivision SUB-2014-91/c to revise scheme as two stage development of 76 residential lots, with consequential changes to roading and utility lots, and protection of stormwater overland flow paths. The outcome was s127 Upheld on 09/03/2017.
LUC-2015-389/A Land Use Consent s357 objection to fees. The outcome was s357 Upheld in Part on 16/02/2016.
SUB-2014-91/C Subdivision Consent variation of subdivision consent SUB-2014-91/B for the subdivision of 67 & 67A Gladstone Road North, 112 Hagart Alexander Drive and Esplanade Reserve by changing the road reserve status of new Lot 105. The outcome was s127 Upheld on 30/11/2015.
LUC-2015-389 Land Use Consent to undertake earthworks for subdivision SUB-2014-91 and establish a culvert within a Landscape Conservation Area. The outcome was Granted on 30/09/2015.
SUB-2014-91 Subdivision Consent Stage 2. The outcome was Staged Subdivision on 27/02/2015.
LUC-2014-323/A Land Use Consent variation of land use consent LUC-2014-323, being a land use for new lots with no access or frontage to legal road at Lots 99, 103 and 104 consequential to SUB-2014-91/B. The outcome was s127 Upheld on 16/06/2015.
SUB-2014-91/B Subdivision Consent s127 change of conditions to SUB-2014-91 to create staged subdivision of 81 residential lots, with revised roading layout and additional lots with no access or frontage. The outcome was s127 Upheld on 16/06/2015.
SUB-2014-91/A Subdivision Consent s357 objection to fees. The outcome was S357 Upheld on 02/06/2015.

SUB-2014-91 Subdivision Consent subdivision creating 82 residential lots, roading, stormwater management lot and balance area. The outcome was Granted on 27/02/2015.
LUC-2014-323 Land Use Consent land use consequential to subdivision SUB-2014-91 for a new lot with no access or frontage to legal road being Lot 104. The outcome was Granted on 27/02/2015.

5126391 37 Owhiro Avenue Mosgiel
SUB-1982-384424 Subdivision Consent Ref: SD 5/1 subdivision of Part Section 4 Block II East Taieri Survey District. The outcome was Granted on 08/09/1982.
SUB-1988-354636 Subdivision Consent Ref: 165/1 subdivision of Part Section 4 and Lot 1 DP 18347 Block II East Taieri Survey District. The outcome was Granted on 26/04/1989.
LUC-2018-322 Land Use Consent to reduce the front yards of 30, 32, 37, 39, 41, 43, 45, 46, 47, 48, 49 and Lots 58, 62 and 63 SUB-2014-91/D (created from part of 100 Owhiro Ave, Mosgiel) from 4.5m to 3.0m, and/or front yards along the edges of Access Lots 108, 110 and 111 DP 519032. The outcome was Granted on 17/07/2018.
SUB-2014-91/D Subdivision Consent s127 variation of subdivision SUB-2014-91/c to revise scheme as two stage development of 76 residential lots, with consequential changes to roading and utility lots, and protection of stormwater overland flow paths. The outcome was s127 Upheld on 09/03/2017.
LUC-2015-389/A Land Use Consent s357 objection to fees. The outcome was s357 Upheld in Part on 16/02/2016.
SUB-2014-91/C Subdivision Consent variation of subdivision consent SUB-2014-91/B for the subdivision of 67 & 67A Gladstone Road North, 112 Hagart Alexander Drive and Esplanade Reserve by changing the road reserve status of new Lot 105. The outcome was s127 Upheld on 30/11/2015.
LUC-2015-389 Land Use Consent to undertake earthworks for subdivision SUB-2014-91 and establish a culvert within a Landscape Conservation Area. The outcome was Granted on 30/09/2015.
SUB-2014-91 Subdivision Consent Stage 2. The outcome was Staged Subdivision on 27/02/2015.
LUC-2014-323/A Land Use Consent variation of land use consent LUC-2014-323, being a land use for new lots with no access or frontage to legal road at Lots 99, 103 and 104 consequential to SUB-2014-91/B. The outcome was s127 Upheld on 16/06/2015.
SUB-2014-91/B Subdivision Consent s127 change of conditions to SUB-2014-91 to create staged subdivision of 81 residential lots, with revised roading layout and additional lots with no access or frontage. The outcome was s127 Upheld on 16/06/2015.
SUB-2014-91/A Subdivision Consent s357 objection to fees. The outcome was S357 Upheld on 02/06/2015.
SUB-2014-91 Subdivision Consent subdivision creating 82 residential lots, roading, stormwater management lot and balance area. The outcome was Granted on 27/02/2015.
LUC-2014-323 Land Use Consent land use consequential to subdivision SUB-2014-91 for a new lot with no access or frontage to legal road being Lot 104. The outcome was Granted on 27/02/2015.

5126392 39 Owhiro Avenue Mosgiel
SUB-1982-384424 Subdivision Consent Ref: SD 5/1 subdivision of Part Section 4 Block II East Taieri Survey District. The outcome was Granted on 08/09/1982.
SUB-1988-354636 Subdivision Consent Ref: 165/1 subdivision of Part Section 4 and Lot 1 DP 18347 Block II East Taieri Survey District. The outcome was Granted on 26/04/1989.
LUC-2019-449 Land Use Consent land use consent for the establishment of a retaining wall supporting fill of up to 1.0m and a fence that is 2.2m above ground level on the front boundary of the site. The outcome was Granted on 23/09/2019.
S221-2018-13 s221 Change or Cancellation of Consent Notice variation of consent notice 11076406.8 under section 221 resource management act 1991. The outcome was Consent Notice Issued on 21/01/2019.
LUC-2018-322 Land Use Consent to reduce the front yards of 30, 32, 37, 39, 41, 43, 45, 46, 47, 48, 49 and Lots 58, 62 and 63 SUB-2014-91/D (created from part of 100 Owhiro Ave, Mosgiel) from 4.5m to 3.0m,

and/or front yards along the edges of Access Lots 108, 110 and 111 DP 519032. The outcome was Granted on 17/07/2018.
SUB-2014-91/D Subdivision Consent s127 variation of subdivision SUB-2014-91/c to revise scheme as two stage development of 76 residential lots, with consequential changes to roading and utility lots, and protection of stormwater overland flow paths. The outcome was s127 Upheld on 09/03/2017.
LUC-2015-389/A Land Use Consent s357 objection to fees. The outcome was s357 Upheld in Part on 16/02/2016.
SUB-2014-91/C Subdivision Consent variation of subdivision consent SUB-2014-91/B for the subdivision of 67 & 67A Gladstone Road North, 112 Hagart Alexander Drive and Esplanade Reserve by changing the road reserve status of new Lot 105. The outcome was s127 Upheld on 30/11/2015.
LUC-2015-389 Land Use Consent to undertake earthworks for subdivision SUB-2014-91 and establish a culvert within a Landscape Conservation Area. The outcome was Granted on 30/09/2015.
SUB-2014-91 Subdivision Consent Stage 2. The outcome was Staged Subdivision on 27/02/2015.
LUC-2014-323/A Land Use Consent variation of land use consent LUC-2014-323, being a land use for new lots with no access or frontage to legal road at Lots 99, 103 and 104 consequential to SUB-2014-91/B. The outcome was s127 Upheld on 16/06/2015.
SUB-2014-91/B Subdivision Consent s127 change of conditions to SUB-2014-91 to create staged subdivision of 81 residential lots, with revised roading layout and additional lots with no access or frontage. The outcome was s127 Upheld on 16/06/2015.
SUB-2014-91/A Subdivision Consent s357 objection to fees. The outcome was S357 Upheld on 02/06/2015.
SUB-2014-91 Subdivision Consent subdivision creating 82 residential lots, roading, stormwater management lot and balance area. The outcome was Granted on 27/02/2015.
LUC-2014-323 Land Use Consent land use consequential to subdivision SUB-2014-91 for a new lot with no access or frontage to legal road being Lot 104. The outcome was Granted on 27/02/2015.

5127952 23 Owhiro Avenue Mosgiel
SUB-1982-384424 Subdivision Consent Ref: SD 5/1 subdivision of Part Section 4 Block II East Taieri Survey District. The outcome was Granted on 08/09/1982.
SUB-1988-354636 Subdivision Consent Ref: 165/1 subdivision of Part Section 4 and Lot 1 DP 18347 Block II East Taieri Survey District. The outcome was Granted on 26/04/1989.
MTAC-2019-1 Marginal or Temporary Activity Notice deemed permitted marginal or temporary activity for a dwelling with roof eave breaching the required front yard. The outcome was Issued on 31/01/2019.
SUB-2014-91/D Subdivision Consent s127 variation of subdivision SUB-2014-91/c to revise scheme as two stage development of 76 residential lots, with consequential changes to roading and utility lots, and protection of stormwater overland flow paths. The outcome was s127 Upheld on 09/03/2017.
LUC-2015-389/A Land Use Consent s357 objection to fees. The outcome was s357 Upheld in Part on 16/02/2016.
SUB-2014-91/C Subdivision Consent variation of subdivision consent SUB-2014-91/B for the subdivision of 67 & 67A Gladstone Road North, 112 Hagart Alexander Drive and Esplanade Reserve by changing the road reserve status of new Lot 105. The outcome was s127 Upheld on 30/11/2015.
LUC-2015-389 Land Use Consent to undertake earthworks for subdivision SUB-2014-91 and establish a culvert within a Landscape Conservation Area. The outcome was Granted on 30/09/2015.
SUB-2014-91 Subdivision Consent Stage 3. The outcome was Staged Subdivision on 09/06/2015.
LUC-2014-323/A Land Use Consent variation of land use consent LUC-2014-323, being a land use for new lots with no access or frontage to legal road at Lots 99, 103 and 104 consequential to SUB-2014-91/B. The outcome was s127 Upheld on 16/06/2015.
SUB-2014-91/B Subdivision Consent s127 change of conditions to SUB-2014-91 to create staged subdivision of 81 residential lots, with revised roading layout and additional lots with no access or frontage. The outcome was s127 Upheld on 16/06/2015.

SUB-2014-91/A Subdivision Consent s357 objection to fees. The outcome was S357 Upheld on 02/06/2015.
SUB-2014-91 Subdivision Consent subdivision creating 82 residential lots, roading, stormwater management lot and balance area. The outcome was Granted on 27/02/2015.
LUC-2014-323 Land Use Consent land use consequential to subdivision SUB-2014-91 for a new lot with no access or frontage to legal road being Lot 104. The outcome was Granted on 27/02/2015.

5127953 25 Owhiro Avenue Mosgiel
SUB-1982-384424 Subdivision Consent Ref: SD 5/1 subdivision of Part Section 4 Block II East Taieri Survey District. The outcome was Granted on 08/09/1982.
SUB-1988-354636 Subdivision Consent Ref: 165/1 subdivision of Part Section 4 and Lot 1 DP 18347 Block II East Taieri Survey District. The outcome was Granted on 26/04/1989.
SUB-2014-91/D Subdivision Consent s127 variation of subdivision SUB-2014-91/c to revise scheme as two stage development of 76 residential lots, with consequential changes to roading and utility lots, and protection of stormwater overland flow paths. The outcome was s127 Upheld on 09/03/2017.
LUC-2015-389/A Land Use Consent s357 objection to fees. The outcome was s357 Upheld in Part on 16/02/2016.
SUB-2014-91/C Subdivision Consent variation of subdivision consent SUB-2014-91/B for the subdivision of 67 & 67A Gladstone Road North, 112 Hagart Alexander Drive and Esplanade Reserve by changing the road reserve status of new Lot 105. The outcome was s127 Upheld on 30/11/2015.
LUC-2015-389 Land Use Consent to undertake earthworks for subdivision SUB-2014-91 and establish a culvert within a Landscape Conservation Area. The outcome was Granted on 30/09/2015.
SUB-2014-91 Subdivision Consent Stage 3. The outcome was Staged Subdivision on 09/06/2015.
LUC-2014-323/A Land Use Consent variation of land use consent LUC-2014-323, being a land use for new lots with no access or frontage to legal road at Lots 99, 103 and 104 consequential to SUB-2014-91/B. The outcome was s127 Upheld on 16/06/2015.
SUB-2014-91/B Subdivision Consent s127 change of conditions to SUB-2014-91 to create staged subdivision of 81 residential lots, with revised roading layout and additional lots with no access or frontage. The outcome was s127 Upheld on 16/06/2015.
SUB-2014-91/A Subdivision Consent s357 objection to fees. The outcome was S357 Upheld on 02/06/2015.
SUB-2014-91 Subdivision Consent subdivision creating 82 residential lots, roading, stormwater management lot and balance area. The outcome was Granted on 27/02/2015.
LUC-2014-323 Land Use Consent land use consequential to subdivision SUB-2014-91 for a new lot with no access or frontage to legal road being Lot 104. The outcome was Granted on 27/02/2015.

5127954 27 Owhiro Avenue Mosgiel
SUB-1982-384424 Subdivision Consent Ref: SD 5/1 subdivision of Part Section 4 Block II East Taieri Survey District. The outcome was Granted on 08/09/1982.
SUB-1988-354636 Subdivision Consent Ref: 165/1 subdivision of Part Section 4 and Lot 1 DP 18347 Block II East Taieri Survey District. The outcome was Granted on 26/04/1989.
SUB-2014-91/D Subdivision Consent s127 variation of subdivision SUB-2014-91/c to revise scheme as two stage development of 76 residential lots, with consequential changes to roading and utility lots, and protection of stormwater overland flow paths. The outcome was s127 Upheld on 09/03/2017.
LUC-2015-389/A Land Use Consent s357 objection to fees. The outcome was s357 Upheld in Part on 16/02/2016.
SUB-2014-91/C Subdivision Consent variation of subdivision consent SUB-2014-91/B for the subdivision of 67 & 67A Gladstone Road North, 112 Hagart Alexander Drive and Esplanade Reserve by changing the road reserve status of new Lot 105. The outcome was s127 Upheld on 30/11/2015.
LUC-2015-389 Land Use Consent to undertake earthworks for subdivision SUB-2014-91 and establish a culvert within a Landscape Conservation Area. The outcome was Granted on 30/09/2015.

SUB-2014-91 Subdivision Consent Stage 3. The outcome was Staged Subdivision on 09/06/2015.
LUC-2014-323/A Land Use Consent variation of land use consent LUC-2014-323, being a land use for new lots with no access or frontage to legal road at Lots 99, 103 and 104 consequential to SUB-2014-91/B. The outcome was s127 Upheld on 16/06/2015.
SUB-2014-91/B Subdivision Consent s127 change of conditions to SUB-2014-91 to create staged subdivision of 81 residential lots, with revised roading layout and additional lots with no access or frontage. The outcome was s127 Upheld on 16/06/2015.
SUB-2014-91/A Subdivision Consent s357 objection to fees. The outcome was S357 Upheld on 02/06/2015.
SUB-2014-91 Subdivision Consent subdivision creating 82 residential lots, roading, stormwater management lot and balance area. The outcome was Granted on 27/02/2015.
LUC-2014-323 Land Use Consent land use consequential to subdivision SUB-2014-91 for a new lot with no access or frontage to legal road being Lot 104. The outcome was Granted on 27/02/2015.

5127956 29 Owhiro Avenue Mosgiel
SUB-1982-384424 Subdivision Consent Ref: SD 5/1 subdivision of Part Section 4 Block II East Taieri Survey District. The outcome was Granted on 08/09/1982.
SUB-1988-354636 Subdivision Consent Ref: 165/1 subdivision of Part Section 4 and Lot 1 DP 18347 Block II East Taieri Survey District. The outcome was Granted on 26/04/1989.
SUB-2014-91/D Subdivision Consent s127 variation of subdivision SUB-2014-91/c to revise scheme as two stage development of 76 residential lots, with consequential changes to roading and utility lots, and protection of stormwater overland flow paths. The outcome was s127 Upheld on 09/03/2017.
LUC-2015-389/A Land Use Consent s357 objection to fees. The outcome was s357 Upheld in Part on 16/02/2016.
SUB-2014-91/C Subdivision Consent variation of subdivision consent SUB-2014-91/B for the subdivision of 67 & 67A Gladstone Road North, 112 Hagart Alexander Drive and Esplanade Reserve by changing the road reserve status of new Lot 105. The outcome was s127 Upheld on 30/11/2015.
LUC-2015-389 Land Use Consent to undertake earthworks for subdivision SUB-2014-91 and establish a culvert within a Landscape Conservation Area. The outcome was Granted on 30/09/2015.
SUB-2014-91 Subdivision Consent Stage 3. The outcome was Staged Subdivision on 09/06/2015.
LUC-2014-323/A Land Use Consent variation of land use consent LUC-2014-323, being a land use for new lots with no access or frontage to legal road at Lots 99, 103 and 104 consequential to SUB-2014-91/B. The outcome was s127 Upheld on 16/06/2015.
SUB-2014-91/B Subdivision Consent s127 change of conditions to SUB-2014-91 to create staged subdivision of 81 residential lots, with revised roading layout and additional lots with no access or frontage. The outcome was s127 Upheld on 16/06/2015.
SUB-2014-91/A Subdivision Consent s357 objection to fees. The outcome was S357 Upheld on 02/06/2015.
SUB-2014-91 Subdivision Consent subdivision creating 82 residential lots, roading, stormwater management lot and balance area. The outcome was Granted on 27/02/2015.
LUC-2014-323 Land Use Consent land use consequential to subdivision SUB-2014-91 for a new lot with no access or frontage to legal road being Lot 104. The outcome was Granted on 27/02/2015.

5127959 33 Owhiro Avenue Mosgiel
SUB-1982-384424 Subdivision Consent Ref: SD 5/1 subdivision of Part Section 4 Block II East Taieri Survey District. The outcome was Granted on 08/09/1982.
SUB-1988-354636 Subdivision Consent Ref: 165/1 subdivision of Part Section 4 and Lot 1 DP 18347 Block II East Taieri Survey District. The outcome was Granted on 26/04/1989.
SUB-2014-91/D Subdivision Consent s127 variation of subdivision SUB-2014-91/c to revise scheme as two stage development of 76 residential lots, with consequential changes to roading and utility lots, and protection of stormwater overland flow paths. The outcome was s127 Upheld on 09/03/2017.

LUC-2015-389/A Land Use Consent s357 objection to fees. The outcome was s357 Upheld in Part on 16/02/2016.
SUB-2014-91/C Subdivision Consent variation of subdivision consent SUB-2014-91/B for the subdivision of 67 & 67A Gladstone Road North, 112 Hagart Alexander Drive and Esplanade Reserve by changing the road reserve status of new Lot 105. The outcome was s127 Upheld on 30/11/2015.
LUC-2015-389 Land Use Consent to undertake earthworks for subdivision SUB-2014-91 and establish a culvert within a Landscape Conservation Area. The outcome was Granted on 30/09/2015.
SUB-2014-91 Subdivision Consent Stage 3. The outcome was Staged Subdivision on 09/06/2015.
LUC-2014-323/A Land Use Consent variation of land use consent LUC-2014-323, being a land use for new lots with no access or frontage to legal road at Lots 99, 103 and 104 consequential to SUB-2014-91/B. The outcome was s127 Upheld on 16/06/2015.
SUB-2014-91/B Subdivision Consent s127 change of conditions to SUB-2014-91 to create staged subdivision of 81 residential lots, with revised roading layout and additional lots with no access or frontage. The outcome was s127 Upheld on 16/06/2015.
SUB-2014-91/A Subdivision Consent s357 objection to fees. The outcome was S357 Upheld on 02/06/2015.
SUB-2014-91 Subdivision Consent subdivision creating 82 residential lots, roading, stormwater management lot and balance area. The outcome was Granted on 27/02/2015.
LUC-2014-323 Land Use Consent land use consequential to subdivision SUB-2014-91 for a new lot with no access or frontage to legal road being Lot 104. The outcome was Granted on 27/02/2015.

5127960 35 Owhiro Avenue Mosgiel
SUB-1982-384424 Subdivision Consent Ref: SD 5/1 subdivision of Part Section 4 Block II East Taieri Survey District. The outcome was Granted on 08/09/1982.
SUB-1988-354636 Subdivision Consent Ref: 165/1 subdivision of Part Section 4 and Lot 1 DP 18347 Block II East Taieri Survey District. The outcome was Granted on 26/04/1989.
LUC-2018-322 Land Use Consent to reduce the front yards of 30, 32, 37, 39, 41, 43, 45, 46, 47, 48, 49 and Lots 58, 62 and 63 SUB-2014-91/D (created from part of 100 Owhiro Ave, Mosgiel) from 4.5m to 3.0m, and/or front yards along the edges of Access Lots 108, 110 and 111 DP 519032. The outcome was Granted on 17/07/2018.
SUB-2014-91/D Subdivision Consent s127 variation of subdivision SUB-2014-91/c to revise scheme as two stage development of 76 residential lots, with consequential changes to roading and utility lots, and protection of stormwater overland flow paths. The outcome was s127 Upheld on 09/03/2017.
LUC-2015-389/A Land Use Consent s357 objection to fees. The outcome was s357 Upheld in Part on 16/02/2016.
SUB-2014-91/C Subdivision Consent variation of subdivision consent SUB-2014-91/B for the subdivision of 67 & 67A Gladstone Road North, 112 Hagart Alexander Drive and Esplanade Reserve by changing the road reserve status of new Lot 105. The outcome was s127 Upheld on 30/11/2015.
LUC-2015-389 Land Use Consent to undertake earthworks for subdivision SUB-2014-91 and establish a culvert within a Landscape Conservation Area. The outcome was Granted on 30/09/2015.
SUB-2014-91 Subdivision Consent Stage 3. The outcome was Staged Subdivision on 09/06/2015.
LUC-2014-323/A Land Use Consent variation of land use consent LUC-2014-323, being a land use for new lots with no access or frontage to legal road at Lots 99, 103 and 104 consequential to SUB-2014-91/B. The outcome was s127 Upheld on 16/06/2015.
SUB-2014-91/B Subdivision Consent s127 change of conditions to SUB-2014-91 to create staged subdivision of 81 residential lots, with revised roading layout and additional lots with no access or frontage. The outcome was s127 Upheld on 16/06/2015.
SUB-2014-91/A Subdivision Consent s357 objection to fees. The outcome was S357 Upheld on 02/06/2015.
SUB-2014-91 Subdivision Consent subdivision creating 82 residential lots, roading, stormwater management lot and balance area. The outcome was Granted on 27/02/2015.

LUC-2014-323 Land Use Consent land use consequential to subdivision SUB-2014-91 for a new lot with no access or frontage to legal road being Lot 104. The outcome was Granted on 27/02/2015.

5127961 24 Owhiro Avenue Mosgiel
SUB-1982-384424 Subdivision Consent Ref: SD 5/1 subdivision of Part Section 4 Block II East Taieri Survey District. The outcome was Granted on 08/09/1982.
SUB-1988-354636 Subdivision Consent Ref: 165/1 subdivision of Part Section 4 and Lot 1 DP 18347 Block II East Taieri Survey District. The outcome was Granted on 26/04/1989.
LUC-2020-355 Land Use Consent land use consent for a proposed dwelling breaching building length rule. The outcome was Granted on 31/08/2020.
SUB-2014-91/D Subdivision Consent s127 variation of subdivision SUB-2014-91/c to revise scheme as two stage development of 76 residential lots, with consequential changes to roading and utility lots, and protection of stormwater overland flow paths. The outcome was s127 Upheld on 09/03/2017.
LUC-2015-389/A Land Use Consent s357 objection to fees. The outcome was s357 Upheld in Part on 16/02/2016.
SUB-2014-91/C Subdivision Consent variation of subdivision consent SUB-2014-91/B for the subdivision of 67 & 67A Gladstone Road North, 112 Hagart Alexander Drive and Esplanade Reserve by changing the road reserve status of new Lot 105. The outcome was s127 Upheld on 30/11/2015.
LUC-2015-389 Land Use Consent to undertake earthworks for subdivision SUB-2014-91 and establish a culvert within a Landscape Conservation Area. The outcome was Granted on 30/09/2015.
SUB-2014-91 Subdivision Consent Stage 3. The outcome was Staged Subdivision on 09/06/2015.
LUC-2014-323/A Land Use Consent variation of land use consent LUC-2014-323, being a land use for new lots with no access or frontage to legal road at Lots 99, 103 and 104 consequential to SUB-2014-91/B. The outcome was s127 Upheld on 16/06/2015.
SUB-2014-91/B Subdivision Consent s127 change of conditions to SUB-2014-91 to create staged subdivision of 81 residential lots, with revised roading layout and additional lots with no access or frontage. The outcome was s127 Upheld on 16/06/2015.
SUB-2014-91/A Subdivision Consent s357 objection to fees. The outcome was S357 Upheld on 02/06/2015.
SUB-2014-91 Subdivision Consent subdivision creating 82 residential lots, roading, stormwater management lot and balance area. The outcome was Granted on 27/02/2015.
LUC-2014-323 Land Use Consent land use consequential to subdivision SUB-2014-91 for a new lot with no access or frontage to legal road being Lot 104. The outcome was Granted on 27/02/2015.

5127962 2 Glenimrie Close Mosgiel
SUB-1982-384424 Subdivision Consent Ref: SD 5/1 subdivision of Part Section 4 Block II East Taieri Survey District. The outcome was Granted on 08/09/1982.
SUB-1988-354636 Subdivision Consent Ref: 165/1 subdivision of Part Section 4 and Lot 1 DP 18347 Block II East Taieri Survey District. The outcome was Granted on 26/04/1989.
SUB-2014-91/D Subdivision Consent s127 variation of subdivision SUB-2014-91/c to revise scheme as two stage development of 76 residential lots, with consequential changes to roading and utility lots, and protection of stormwater overland flow paths. The outcome was s127 Upheld on 09/03/2017.
LUC-2015-389/A Land Use Consent s357 objection to fees. The outcome was s357 Upheld in Part on 16/02/2016.
SUB-2014-91/C Subdivision Consent variation of subdivision consent SUB-2014-91/B for the subdivision of 67 & 67A Gladstone Road North, 112 Hagart Alexander Drive and Esplanade Reserve by changing the road reserve status of new Lot 105. The outcome was s127 Upheld on 30/11/2015.
LUC-2015-389 Land Use Consent to undertake earthworks for subdivision SUB-2014-91 and establish a culvert within a Landscape Conservation Area. The outcome was Granted on 30/09/2015.
SUB-2014-91 Subdivision Consent Stage 3. The outcome was Staged Subdivision on 09/06/2015.

LUC-2014-323/A Land Use Consent variation of land use consent LUC-2014-323, being a land use for new lots with no access or frontage to legal road at Lots 99, 103 and 104 consequential to SUB-2014-91/B. The outcome was s127 Upheld on 16/06/2015.
SUB-2014-91/B Subdivision Consent s127 change of conditions to SUB-2014-91 to create staged subdivision of 81 residential lots, with revised roading layout and additional lots with no access or frontage. The outcome was s127 Upheld on 16/06/2015.
SUB-2014-91/A Subdivision Consent s357 objection to fees. The outcome was S357 Upheld on 02/06/2015.
SUB-2014-91 Subdivision Consent subdivision creating 82 residential lots, roading, stormwater management lot and balance area. The outcome was Granted on 27/02/2015.
LUC-2014-323 Land Use Consent land use consequential to subdivision SUB-2014-91 for a new lot with no access or frontage to legal road being Lot 104. The outcome was Granted on 27/02/2015.

Other Planning Comments

Consent Notices
The record of title for this property has two consent notices registered against it:

- CONO 11281712.5
- CONO 11281712.8

Copies of the consent notices are attached to this LIM. The conditions in the consent notices must be complied with on an ongoing basis.

The information provided with this LIM on District Plan requirements and resource consents has been verified by City Planning in relation to the subject property only. All information included in relation to other land surrounding the site is indicative.

Accuracy of Boundaries
Knowing the true location of the property boundaries on the ground is important in determining what can be carried out on the land under the District Plan and in determining whether the current activity complies with the District Plan or any resource consent. Please note that the Council's aerial photographs may not accurately depict the extent of the property. The Record of Title for the site should be checked in the first instance. A surveyor may need to be consulted to establish the true location of the title boundaries on the ground.

Access to Site
The legality of any access to the site is important in determining what can be carried out on the land under the District Plan and in determining whether the current activity complies with the District Plan or any resource consent. It is recommended that the Record of Title and/or a lawyer be consulted regarding the legality of any legal and/or physical access to the site (and the maintenance thereof).

Heritage New Zealand Pouhere Taonga Act 2014
The Heritage New Zealand Pouhere Taonga Act 2014 applies in addition to any protection provided to a building or site by the District Plan. The Heritage New Zealand Pouhere Taonga Act 2014 makes it unlawful for any person to destroy, or modify the whole or any part of an archaeological site, whether or not the land on which the site is located is designated, or a resource or building consent has been issued, without the prior authority of Heritage New Zealand.

The Heritage New Zealand Pouhere Taonga Act 2014 defines an archaeological site as a place associated with pre-1900 activity, where there may be evidence relating to the history of New Zealand. Pre-1900 buildings are considered archaeological sites under the Heritage New Zealand Pouhere Taonga Act 2014 and are also often associated with subsurface archaeological remains that provide evidence of pre-existing use of the site. Council records may not necessarily identify the precise date upon which an existing building was constructed. Contact the Dunedin office of Heritage New Zealand for further information: infodeepsouth@heritage.org.nz; 03 477 9871.

Resource Management (National Environmental Standard for Assessing and Managing Contaminants in Soil to Protect Human Health) Regulations 2011

The Resource Management (National Environmental Standard for Assessing and Managing Contaminants in Soil to Protect Human Health) Regulations 2011 came into force on 1 January 2012. The National Environmental Standard applies to any piece of land on which an activity or industry described in the current edition of the Hazardous Activities and Industries List (HAIL) is being undertaken, has been undertaken or is more likely than not to have been undertaken. (The current edition of the HAIL is available on the Ministry for the Environment website at www.mfe.govt.nz.) Activities on HAIL sites may need to comply with permitted activity conditions specified in the National Environmental Standard and/or might require resource consent. (The Otago Regional Council should also be consulted for any rules in might have in regards to the use or development of contaminated sites.)

If a person wishes to establish whether a piece of land has had hazardous activities or industries conducted on it, and thus whether activities on that land are controlled by the National Environmental Standard, then the person must pay for a review of the information about the land held by the Council, or pay for a suitably qualified and experienced practitioner to undertake a preliminary site inspection. Formal confirmation from the Council that resource consent is not required under the National Environmental Standard can only be given through a certificate of compliance application.

If you would like a copy of any Resource Consent decision or advice on the current status and relevance of any planning matter referred to in the LIM, enquiries may be made at the Planning Enquiries desk on the Ground Floor of the Civic Centre, 50 The Octagon, or by phoning 477 4000 and asking for the Duty Planner. Planners are available at the Planning Enquiries desk to answer your enquiries between 8:30am and 5:00pm weekdays.

3 Waters

Information Regarding Watercourses

The controlling authority for all water and waterbodies in Dunedin City is the Otago Regional Council. The Regional Plan: Water addresses water take and use, diversions, damming, discharges and bed alteration under the Resource Management Act 1991. They are also responsible for the Flood Protection Management Bylaw 2012.

The controlling authority for watercourses in relation to stormwater drainage, and removal of obstructions in accordance with Local Government Act 1974 is the Dunedin City Council. The Council also issues building and resource consents for certain works around watercourses.

Not all watercourses within Dunedin City are recorded or known to the Council, therefore it is recommended that the applicant inspect the property for watercourses.

For further information on watercourses it is recommended the applicant read the Watercourse Information Sheet. A copy of this document is available on request or for download from the Dunedin City Council website www.dunedin.govt.nz.

Transport

DCC Transport has carried out a desktop inspection of this property and found the following:

Vehicle crossing - shared vehicle access
It appears that the vehicle access to this property is via a shared driveway. Please consult with your Lawyer to find out if this is registered under your property title and/or there is a formal agreement in place between the owners/users of all private accesses in order, to clarify maintenance responsibilities and access permission for the owners/users.

Non-compliant vehicle crossing
To meet current Council standards the vehicle crossing would be required to be hard surfaced from the edge of the carriageway to 5m inside the property boundary. This requirement is to prevent debris migrating from inside the property out onto the footpath and/or carriageway. Council accepts this situation but accepts no liability and points out that maintenance is the responsibility of the property owner. The Council may require this to be addressed in the future.

Private stormwater lateral.
Private stormwater laterals collect stormwater from private properties guttering and runs under the footpath to the kerb and channel on the roadside. The stormwater laterals are private pipes and are the responsibility of the landowner who they service, the repair and maintenance of these pipe's rests solely with the property owner. As the landowner you must maintain your stormwater lateral to ensure that it doesn't become a safety hazard for pedestrians or other road users.

For further explanations on property owner obligations in regard to local road encroachments, vehicle entrances, vegetation management or retaining structures please refer to the Dunedin City Council website at http://www.dunedin.govt.nz/services/roads-and-footpaths or contact Transport on 477 4000.

For properties abutting the state highway, Waka Kotahi NZ Transport Agency is the Road Controlling Authority.

Glossary of Terms and Abbreviations

The following are abbreviations and terms that may appear as a part of a LIM.

Consent, Permit, Licence & Complaint types

AAB	DCC Building permit
AAD	DCC Drainage permit
AAG	Green Island drainage permit
AAH	Hyde permit
AAK	St Kilda permit
AAM	Mosgiel permit
AAP	Port Chalmers permit
AAS	Silverpeaks permit
AAT	Maniototo permit
ABA	Application Building Act 1991
AMD	Amendment to a Building Consent
BC	Building Consent
BCC	Building Compliance Certificate - Sale and Supply of Alcohol Act
BCM	Building Complaint
CER	Certifier
COA	Certificate of Acceptance
DGL	Dangerous Goods Licensing
ENV	Health complaint
HTH	Health licence
LIQ	Alcohol licence
NTF	Notice to Fix
NTR	Notice to Rectify
PIM	Project Information Memorandum
POL	Planning Other Legislation
RMA	Resource Management Act - Resource consent
RMC	Resource consent complaint
WOF	Building Warrant of Fitness

Terms used in Permits & Consents

ALT	Alteration
ADD	Addition
BD D/C	Board drain in common
BLD	Building
BLDNG	Building
BT	Boundary trap
B/T	Boiler tube
CCC	Code Compliance Certificate
DAP	Drainage from adjacent property
DGE	Drainage
DIC	Drain in common
DR	Drainage
DWG	Dwelling
FS	Foul sewer

HEA	Heater
ICC	Interim Code Compliance
MH	Manhole
PL	Plumbing
PLB	Plumbing
PTE	Private
SIS	Sewer in section
WC	Water course
WT	Water table
SW	Stormwater

General terms

RDMS	Records and Document Management System

Appendices

Photographic Map

Scale at A4:
1:750
31/07/2025
8:04:42 PM

N

PARCEL LINES CAN VARY FROM LEGAL PARCEL BOUNDARIES
This map is for illustration purposes only and is not accurate to surveying, engineering or orthophotographic standards. Every effort has been made to ensure correctness and timeliness of the information presented.

2018-2019 Urban, Copyright DCC/Aerial Surveys Ltd. Rural, ORC/Aerial Surveys Ltd. CC BY 4.0 NZ

2013 Urban and rural photography Jan/Feb 2013. Copyright DCC. CC BY 3.0 NZ.

2006/2007 Urban photography March 2007, copyright NZAM. Rural photography March 2006, copyright Terralink International Ltd.

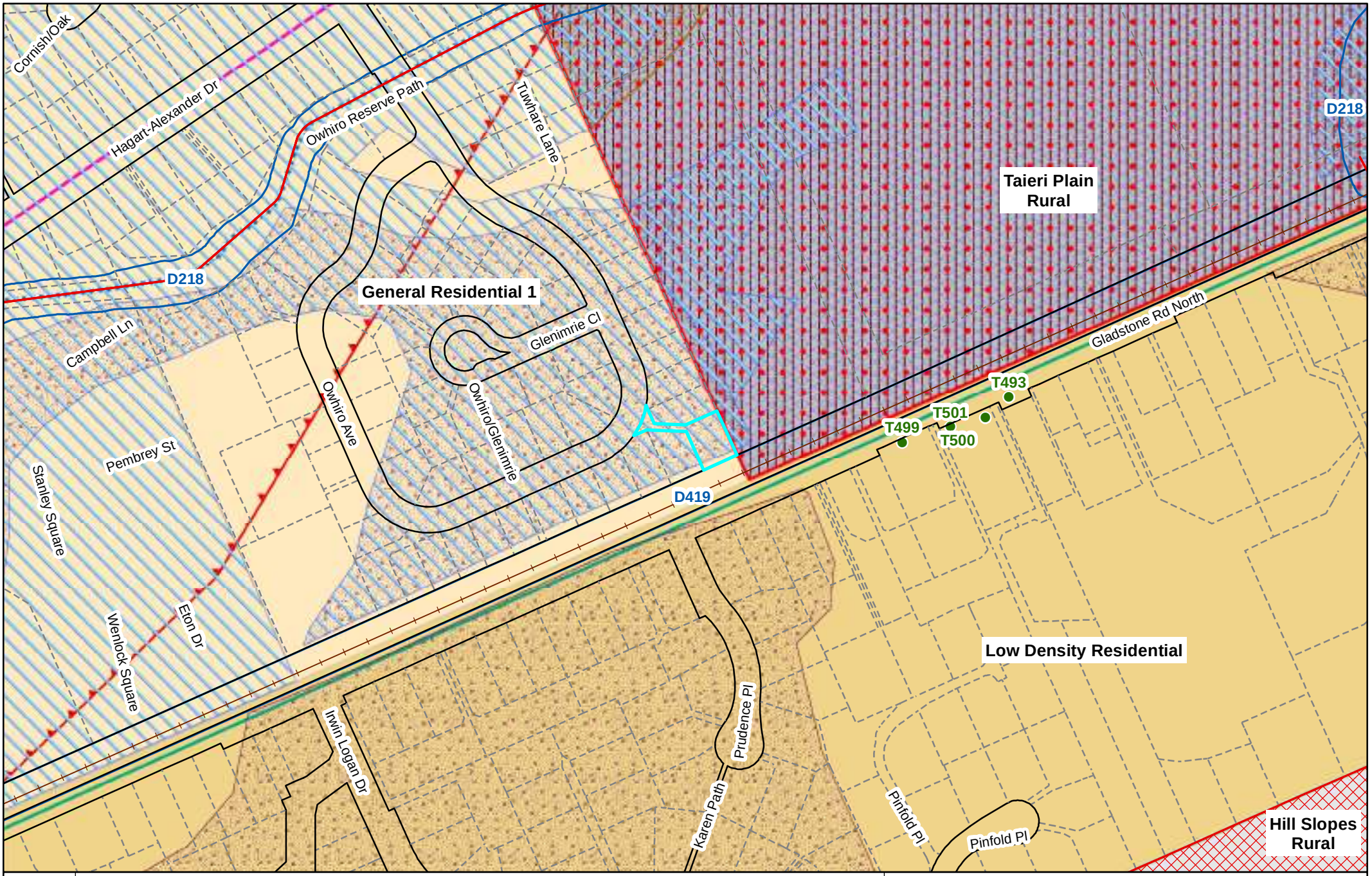

Second Generation District Plan

Scale at A4:
1:3,000
31/07/2025
8:05:05 PM

N

PARCEL LINES CAN VARY FROM LEGAL PARCEL BOUNDARES
This map is for illustration purposes only and is not accurate to surveying, engineering or orthophotographic standards. Every effort has been made to ensure correctness and timeliness of the information presented.

2018-2019 Urban, Copyright DCC/Aerial Surveys Ltd. Rural, ORC/Aerial Surveys Ltd. CC BY 4.0 NZ

2013 Urban and rural photography Jan/Feb 2013. Copyright DCC. CC BY 3.0 NZ.

2006/2007 Urban photography March 2007, copyright NZAM. Rural photography March 2006, copyright Terralink International Ltd.

DUNEDIN CITY COUNCIL | kaunihera a-rohe o Ōtepoti

Code Compliance Certificate Form 7

Section 95, Building Act 2004

B T Young and N R Young
10 Bruce Street
RD 3
Balclutha 9273

The building

Street address of building: 31 Owhiro Avenue Mosgiel

Legal description of land where building is located: LOT 56 DP 527844

Building Name: N/A

Location of building within site/block number: N/A

Level/unit Number: N/A

Current, lawfully established, use: Housing

Number of occupants: 1 **Year first constructed:** 2019

The owner

Name of owner: B T Young and N R Young

Contact person: B T Young and N R Young

Mailing address: 10 Bruce Street, RD 3, Balclutha 9273

Street address/registered office:

Mobile: **Landline:**

Email address:

First point of contact for communications with the building consent authority: As above

Building work

Building Consent Number:
ABA-2019-851 - Erect Dwelling with attached Garage, Install Freestanding Masport F3000 Heater

This CCC also applies to the following amended consents: N/A

Issued by: Dunedin City Council

Code Compliance

The building consent authority named below is satisfied, on reasonable grounds, that-

(a) The building work complies with the building consent

Team Leader Inspections
On behalf of Dunedin City Council

Date: 27 November 2019

50 The Octagon, PO Box 5045, Dunedin 9054, New Zealand
Telephone: 03 477 4000
Email: building@dcc.govt.nz
www.dunedin.govt.nz

BUILDING CONSENT - ABA-2019-851

(Section 51, Building Act 2004)
Form 5

The building

Street address of building: 31 Owhiro Avenue Mosgiel

Legal description of land where building is located: LOT 56 DP 527844

Building Name: N/A

Location of building within site/block number:

Level/unit Number:

The owner

Name of owner: B T Young and N R Young

Contact person: B T Young and N R Young

Mailing address: 10 Bruce Street, RD 3, Balclutha 9273

Street address/registered office:

Mobile: **Landline:**

Email address:

First point of contact for communications with the building consent authority: As above

Building work

The following building work is authorised by this building consent:
Erect Dwelling with attached Garage, Install Freestanding Masport F3000 Heater

This building consent is issued under Section 51 of the Building Act 2004. This building consent does not relieve the owner of the building (or proposed building) of any duty or responsibility under any other Act relating to or affecting the building (or proposed building).
This building consent also does not permit the construction, alteration, demolition, or removal of the building (or proposed building) if that construction, alteration, demolition, or removal would be in breach of any other Act.

Compliance Schedule
A compliance schedule is not required for the building.

Attachments
Copies of the following documents are attached to this building consent:
Record of required site inspections (section 90(2) of the Building Act 2004)
Project Consideration PCON-2019-252

Grant Sutton
Authorised Officer
On behalf of Dunedin City Council

Date: 6 June 2019

DUNEDIN CITY COUNCIL - Approved Building Consent Document
ABA-2019-851

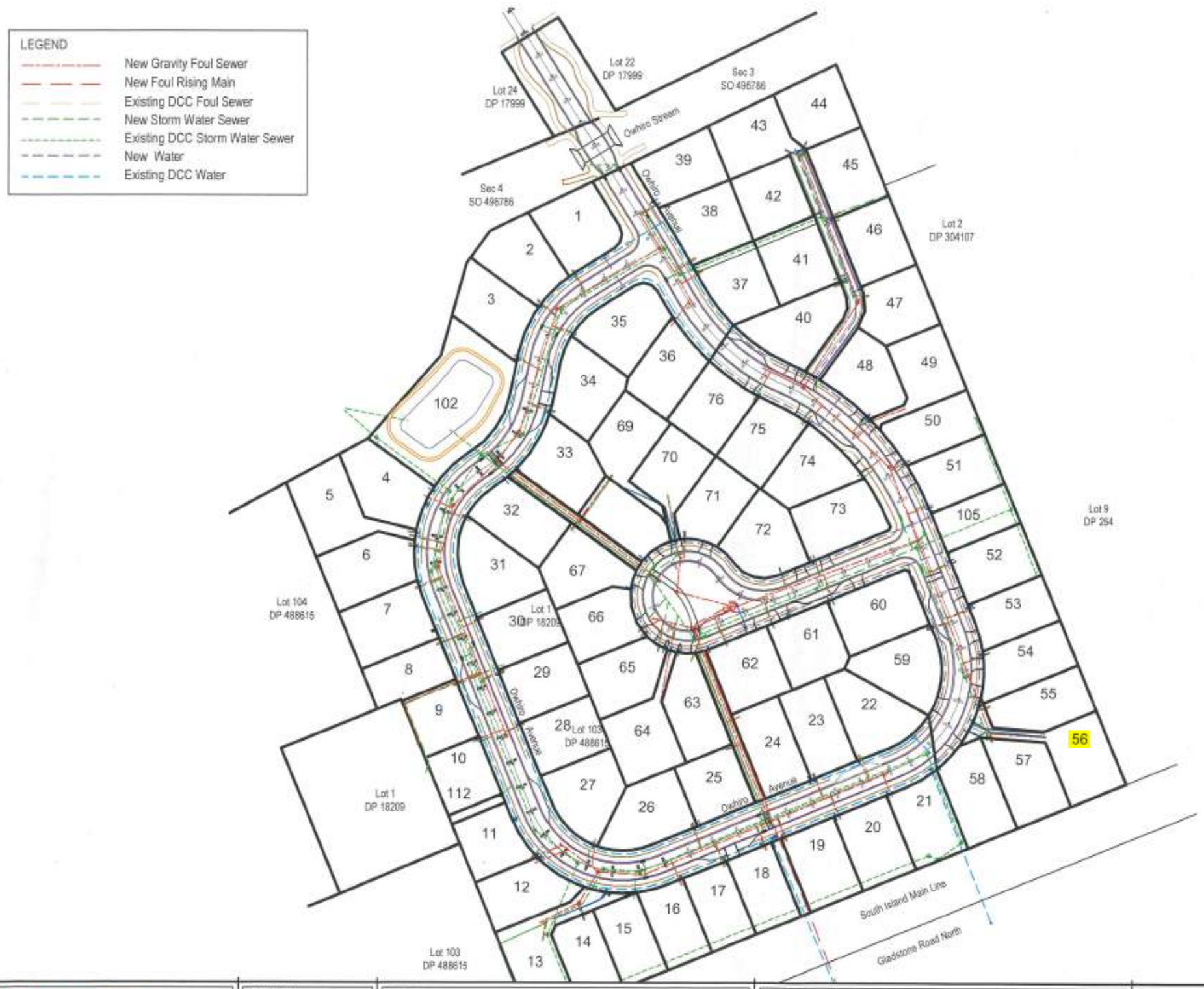

PATERSONPITTSGROUP
Surveying • Planning • Engineering
Your Land Professionals
www.ppgroup.co.nz
0800 PPGROUP

DUNEDIN:
229 Moray Place
PO Box 5933,
Dunedin 9058.
T 03 477 3245
F 03 474 0484
E dunedin@ppgroup.co.nz

Client/Location

"Owhiro Park"
Hagart Alexander Drive

Purpose/Drawing Title

As-Built Services
Stage 2

© COPYRIGHT. This drawing, content and design remains the property of Paterson Pitts Partners Limited and may not be reproduced in part or full or altered without the written permission of Paterson Pitts Partners Limited. This drawing and its contents shall only be used for the purpose for which it is intended. No liability shall be accepted by Paterson Pitts Partners Limited for its unauthorised use.

Surveyed by:	XXX	Original Size: A3	Scale: 1:1500
Designed by:	XXX		
Drawn by:	XXX		
Checked by:	XXX		DO NOT SCALE
Approved by:	XXX		
Job Ref: 14657		Sheet No: 1	Revision No: A / Date Created: 6/09/2018

PLOT DATE: 10 September, 2018 - 12:27 PM BY: Murray Pitts File Name: 14657Aotuiti Stage 2 Plan.dwg

DUNEDIN CITY COUNCIL - Approved Building Consent Document
ABA-2019-851

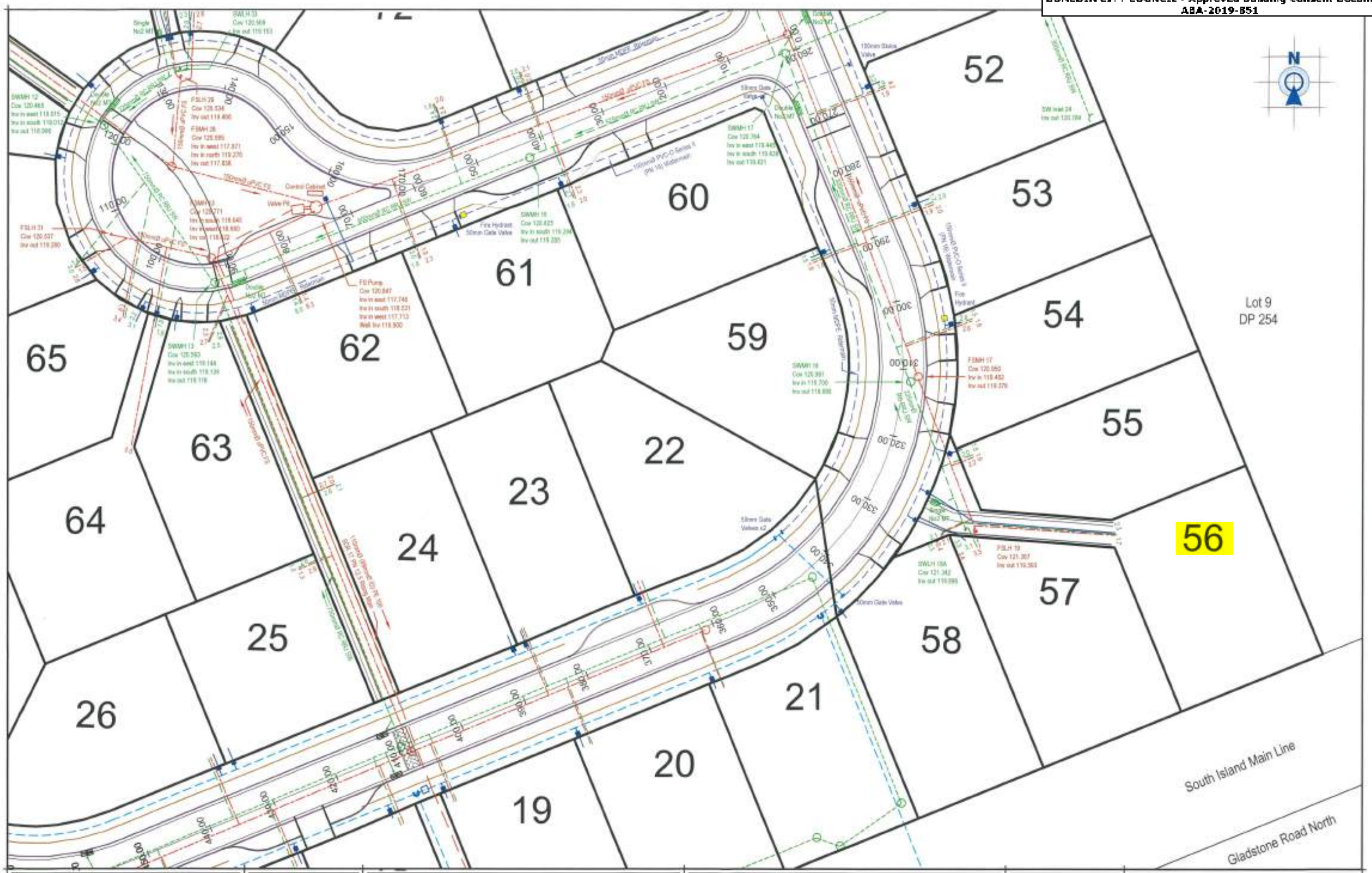

PATERSONPITTSGROUP
Surveying • Planning • Engineering
Your Land Professionals
www.ppgroup.co.nz
0800 PPGROUP

DUNEDIN:
229 Moray Place.
PO Box 5933,
Dunedin 9058.
T 03 477 3245
F 03 474 0484
E dunedin@ppgroup.co.nz

Client/Location

"Owhiro Park"
Hagart Alexander Drive

Purpose/Drawing Title

As-Built Services
Stage 2

© COPYRIGHT. This drawing, contact and design remains the property of Paterson Pitts Partners Limited and may not be reproduced in part or full or altered without the written permission of Paterson Pitts Partners Limited. This drawing and its contact shall only be used for the purpose for which it is intended. No liability shall be accepted by Paterson Pitts Partners Limited for its unauthorised use.

Surveyed by	XXX	Original Size	Scale 1:500
Designed by	XXX	A3	
Drawn by	XXX		DO NOT SCALE
Checked by	XXX		
Approved by	XXX		
Job Ref 14657		Sheet No 4	Revision No A / Date Created 6/09/2018

PLOT DATE 10 September 2018 - 12:27 PM BY Murray Pitts File Name 14657TAsbuiltc Stage 2 Plan.dwg

DUNEDIN CITY COUNCIL - Approved Building Consent Document
ABA-2019-651

Legend

Water Supply

- Manifold Box
- Water Meter
- Toby
- Meter without manifold box
- Retic Flow Meter
- Combination Meter
- Manifold Box With Restrictor
- Water Valve - Zone
- Non Return Valve
- Water Valve - Gate
- Water Valve - Sluice
- Water Hydrant
- Water Backflow Preventor - RPZ
- Water Non-Return Valve
- Water Pump Station
- Water Bore
- Water Treatment Plant
- Water Storage Tank
- Supply Main
- Trunk Main
- Disused
- Reticulation
- Rider
- Scour
- Water Service Lateral
- Water Fire Service Lateral
- Water Critical Service Lateral
- Water Zone Boundary
- Water Reservoir
- Redundant Water Main

NOTE:
Private water services have the same symbols as those above, however they are coloured pink.

Foul Sewerage

- Standard Manhole
- Valve Chamber (pressurised)
- Boundary Kit
- Non-Return Valve
- Pump Station Domestic
- Drop Manhole
- Inspection Manhole
- Inspection Opening
- Lamphole
- Outlet
- Pump Station
- Treatment Plant
- Vent
- Foul Sewer Node
- Foul Drains in Common (public)
- Sewer
- Trunk Sewer
- Vent Line
- Rising Main
- Redundant Foul Sewer Pipe

NOTE:
Private foul drains have the same symbols as those above, however they are coloured orange.

Stormwater

- SW Bubble-up Tank
- SW Drop Manhole
- SW Insp Chamber and Grating Inlet
- SW Inspection Manhole
- SW Inspection Opening
- SW Lamphole
- SW Mudtank Inlet
- SW Outlet
- SW Pipe Inlet
- SW Pressure Manhole
- SW Standard Manhole
- SW Stormwater Node
- Roading Bubble-Up Tank
- Roading Mudtank
- Stormwater Main
- Stormwater Trunk Main
- DCC Open Channel
- Piped WC
- Open WC
- Culvert
- Stormwater Mudtank Pipe
- Redundant Stormwater Main
- SW Sump
- SW Pump Station

NOTE:
Private stormwater drains have the same symbols as those above, however they are coloured light green.

General

- DCC Water & Waste Structure
- Railway Centreline

Cadastral

- Parcel
- Hydro
- Strata
- Road/Rail
- Motorway Parcels
- Easment (where recorded)

Full legend can be viewed at http://www.dunedin.govt.nz/council-online/webmaps/waterservices

DUNEDIN CITY COUNCIL

Council Water & Drainage Services

Information shown is the best available at the time of publishing. The accuracy and completeness of This information is variable. Private assets are typically not mapped. Recent changes may not be reflected. Verify on site before commencing work. For all enquiries phone 03 477 4000.

Scale at A3:
1:500
9/05/2019
6:37:08 PM

N

PARCEL LINES CAN VARY FROM LEGAL PARCEL BOUNDARES
This map is for illustration purposes only and is not accurate to surveying, engineering or orthophotographic standards. Every effort has been made to ensure correctness and timeliness of the information presented.

2013 Urban and rural photography January / February 2013. Dunedin City Council CC BY 3.0 NZ.

2006/2007 Urban photography March 2007, copyright NZAM. Rural photography March 2006, copyright Terralink International Ltd.

DUNEDIN CITY COUNCIL - Approved Building Consent Document
ABA-2019-851

PROPOSED NEW DWELLING

31 Owhiro Avenue, Mosgiel

TRIDENTHOMES
DUNEDIN

LICENSED BUILDING PRACTITIONER
BUILDING CONFIDENCE

'Always check the LBP Register to ensure you building practitioner is licensed'.

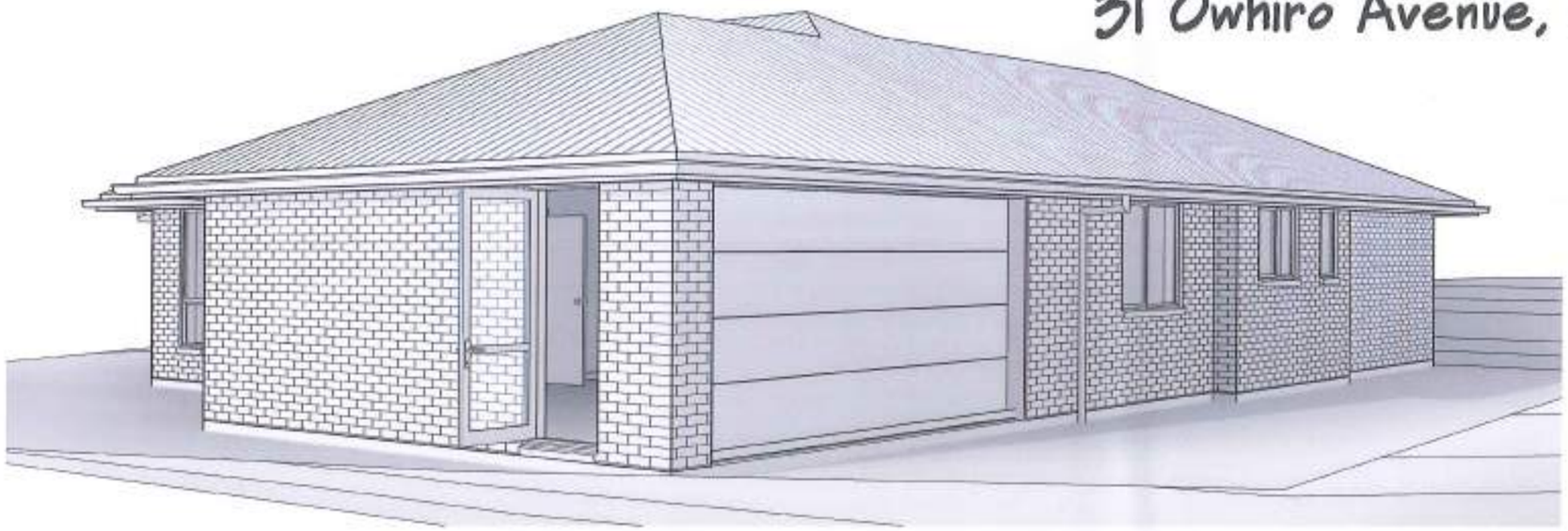

DRAWING LEGEND

SHT	SHEET NAME
01	SITE & DRAINAGE
02	FLOOR PLAN
03	ELEVATIONS
04	FOUNDATION PLAN
05	FOUNDATION DETAILS
06	ROOF PLAN
07	ROOF FLASHING DETAILS
08	BRACING PLAN
09	PLUMBING PLAN
10	PLUMBING NOTES
11	HWC & DRAINS IN GROUND
12	SECTION
13	STRUCTURE DETAILS
14	DURABILITY NOTES
15	BRICK VENEER NOTES
16	BRICK VENEER DETAILS
17	WET AREA DETAILS
18	FLOOR COVERINGS PLAN
19	JOINERY SCHEDULE

Wind Zone -	High Wind Zone
Exposure Zone -	B
Earthquake Zone -	1
Snow Zone -	N5
Snow Loading -	1 kPa
Altitude -	26m - ASL

Legal Description:	LOT 56 DP 527844
Site Address:	31 Owhiro Avenue, Mosgiel
Valuation Number:	28020-11371
Site Area:	840 m²
Zone:	General Residential 1

GENERAL NOTES:

No construction work is to commence until the related building Consent has been obtained. All dimensions & service locations to be checked onsite before commencement of all work. Confirm all Site levels, Floor heights and Site Boundaries before commencement of earthworks. Ground bearing to be confirmed onsite after excavation and before building starts.
PLANS TO BE READ IN CONJUNCTION WITH PROJECT SPECIFICATION.

F5 - WORK SITE BARRIERS.

If the work site is not completely enclosed, and unauthorized entry by children is likely, allow for site fencing when workers are absent from the immediate vicinity. Allow for 2m min high site fence to proposed building perimeter over duration of construction in accordance with Compliance Document Clause F5 of the NZBC. Allow for toeboards to access and storage platforms, toeboards to be 100min above the platform height (10mm max gap between the platform & toeboard), and no lower than the materials stacked on them unless the materials are restrained from falling.

Proposed NEW DWELLING for
Nicole & Brent Young,
Address: 31 Owhiro Avenue, Mosgiel

3/04/2019 10:15:39 a.m.

DUNEDIN CITY COUNCIL - Approved Building Consent Document
ABA-2019-851

50mm 100mm Original Scale

50mm

100mm

Proposed NEW DWELLING for Nicole & Brent Young, Address: 31 Owhiro Avenue, Mosgiel

WIND ZONE CALCULATIONS.

DETERMINATION OF A WIND ZONE - NZS3604:2011

Wind Region -	A
Lee Zone -	No
Ground roughness -	Open
Site exposure -	Exposed
Topography Class -	T1 - Undulations <10m
Building wind zone -	H = Wind speed of 44 m/s

DRAINAGE LEGEND

d.p.	Downpipe.
Oip	Inspection Point.
S	Sump to E1/AS1 3.6. - Drive to have falls towards sump.
----------	Stormwater drain DN 100 @ 1:120 min fall.
SWC	Existing Stormwater Connection Point, allow for inspection point.
FSC	Existing Foul Sewer Connection Point, allow for inspection point.

Estimated Site Works.
Site cut < 220m³
Max change in site level < 1.5m

DCC CITY PLANNING
THESE PLANS ARE APPROVED
This development is permitted by resource consent BACT-2019-32

Signed. nfpetrie
Date: 05/06/2019

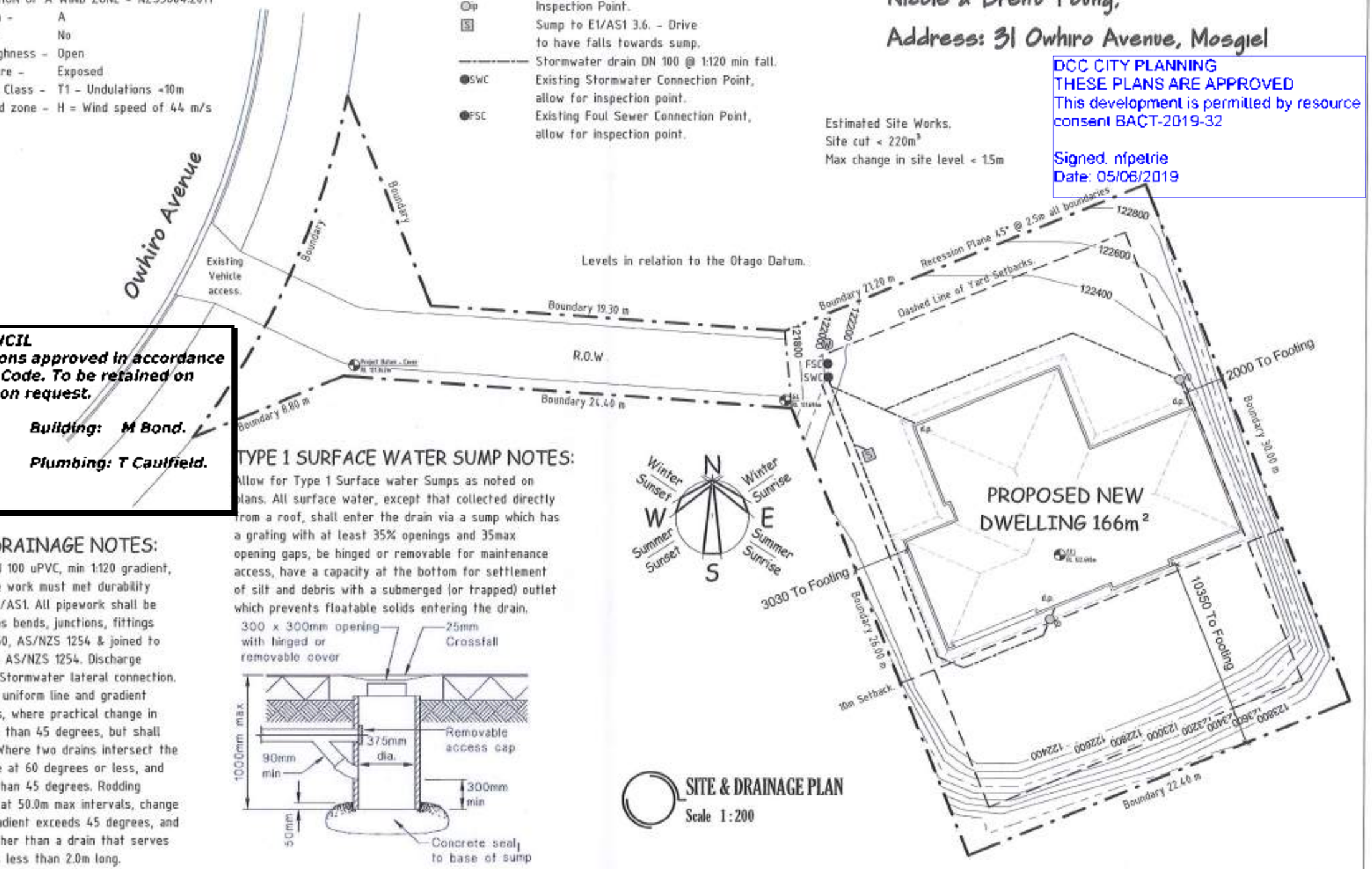

SITE & DRAINAGE PLAN
Scale 1:200

DUNEDIN CITY COUNCIL
Plans and Specifications approved in accordance with the NZ Building Code. To be retained on works and produced on request.

Date: 05/06/2019 *Building: M Bond.*

Date: 05/06/2019 *Plumbing: T Caulfield.*

STORMWATER DRAINAGE NOTES:

Storm Water Drains - DN 100 uPVC, min 1:120 gradient, to NZBC E1/AS1. Drainage work must met durability requirements of NZBC B2/AS1. All pipework shall be from approved uPVC Pipes bends, junctions, fittings and joints to AS/NZS 1260, AS/NZS 1254 & joined to AS 1646, AS/NZS 2032 & AS/NZS 1254. Discharge Storm water to Existing Stormwater lateral connection. Drains must be laid on a uniform line and gradient between points of access, where practical change in direction to be kept less than 45 degrees, but shall not exceed 90 degrees. Where two drains intersect the direction of flow shall be at 60 degrees or less, and where practical at less than 45 degrees. Rodding points shall be installed at 50.0m max intervals, change of direction or where gradient exceeds 45 degrees, and for junctions in drains other than a drain that serves a single downpipe that is less than 2.0m long.

TYPE 1 SURFACE WATER SUMP NOTES:

Allow for Type 1 Surface water Sumps as noted on plans. All surface water, except that collected directly from a roof, shall enter the drain via a sump which has a grating with at least 35% openings and 35max opening gaps, be hinged or removable for maintenance access, have a capacity at the bottom for settlement of silt and debris with a submerged (or trapped) outlet which prevents floatable solids entering the drain.

TRIDENTHOMES DUNEDIN

Project : PROPOSED NEW DWELLING for Client : Nicole & Brent Young Address : 31 Owhiro Avenue, Mosgiel	JOB # : 31_Owhiro	Drw Name : SITE & DRAINAGE			Builder:	Client:
	Drawn By : LBP 113870	DATE : APRIL 2019	NOTE : do not scale from this drawing.	SCALE @ A3 Sht. As indicated	REV # B	DRW # 01

3/04/2019 10:15:42 a.m.

DUNEDIN CITY COUNCIL - Approved Building Consent Document
ABA-2019-851

50mm 100mm Original Scale

50mm
100mm

PLUMBING LEGEND

Code	Description	Model
BATH	Bath	Activita Veneto
HWC	Hot Water Cylinder	Mains Pressure
S	Kitchen Sink	Proprietary
SHR1	Acrylic shower	1000x1000mm
Tub	Laundry Tub	Proprietary
V1	Vanity	900x400mm
V2	Vanity	1200x400mm
WC	Toilet	S Trap
WM	Washing Machine	Proprietary

JOINERY SCHEDULE

Mark	Width	Height	Lintels
GD	4800 mm	2150 mm	F830M
W01	885 mm	2150 mm	2/140x45
W02	600 mm	1800 mm	2/90x45
W03	600 mm	1800 mm	2/90x45
W04	1800 mm	1500 mm	2/140x45
W05	1800 mm	1500 mm	2/140x45
W06	2400 mm	2150 mm	2/240x45
W07	900 mm	1200 mm	2/90x45
W08	1600 mm	2150 mm	2/140x45
W09	600 mm	1200 mm	2/90x45
W10	600 mm	1200 mm	2/90x45
W11	1500 mm	1200 mm	2/90x45
W12	600 mm	900 mm	2/90x45
W13	1200 mm	900 mm	2/140x45
W14	1500 mm	1200 mm	2/140x45
W15	885 mm	2150 mm	2/90x45

SMOKE ALARMS:

(SA) - Smoke Alarm.

Purpose Group SH - Escape route Dead ends do not exceed 25m, Open paths do not exceed 60m Install Type 1 Smoke alarms with Hush facility in every sleeping space, or within 3m of every sleeping space door. Smoke alarms shall be direct fixed to ceiling in accordance with AS 4514 and the manufacturers specifications.

DOWNLIGHTS -
Recessed luminaries (a complete lighting unit) to be IC-F, IC, CA-80 or CA-135 rated as specified in AS/NZS 60598.2.2. & Installed to AS/NZS 60598.2.2.

(SA) - Smoke Alarm with test & Hush facility.
MB - Meterbox.
(OUT) - Ventilation outlet diffusers.
(IN) - Ventilation intake.

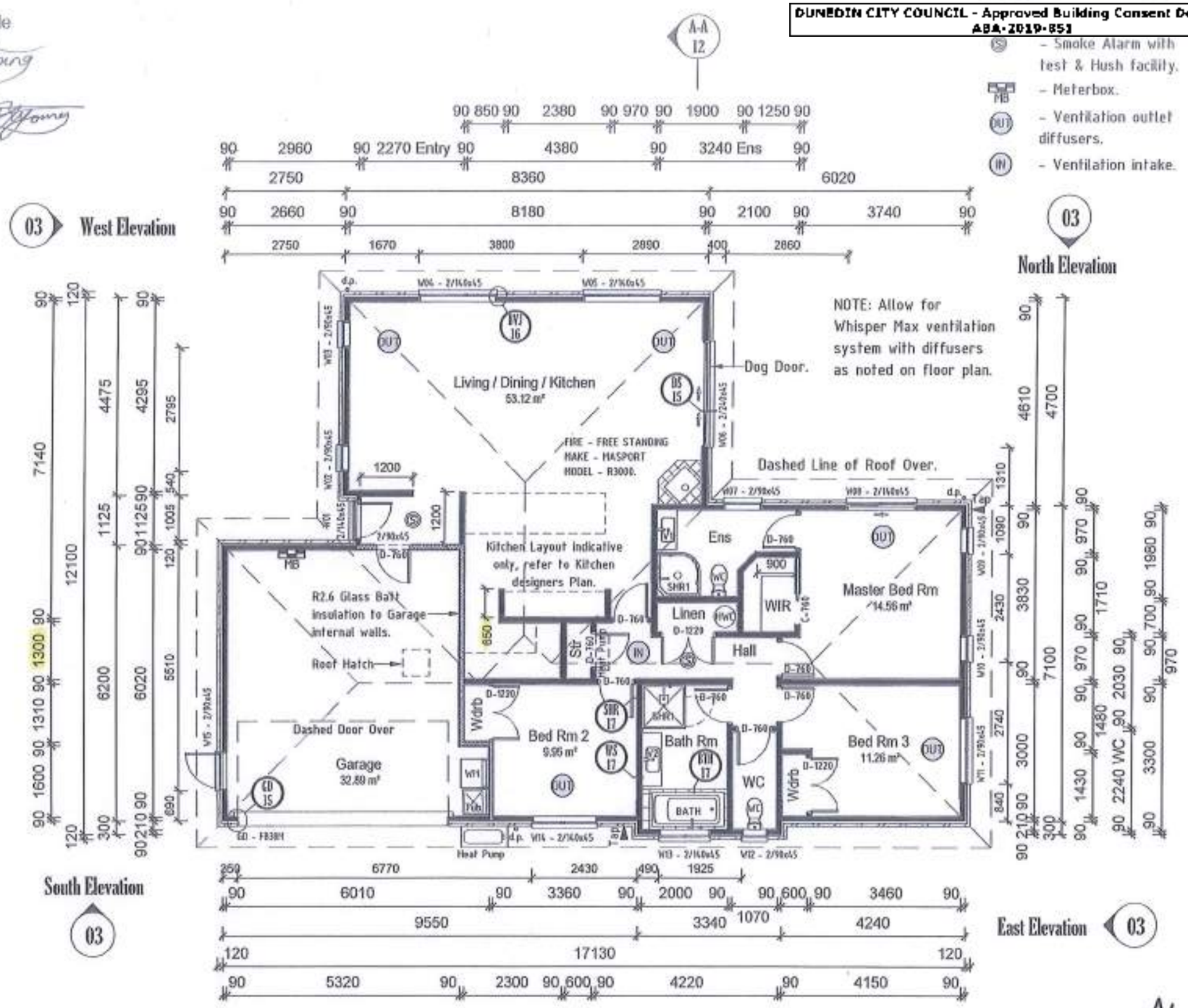

CONSTRUCTION LEGEND.

- Internal wall.
- External Wall - Brick Veneer Cladding on 50nom cavity.

PROPOSED FLOOR PLAN

Scale 1:100

FLOOR AREA SCHEDULE - BV

AREA (O/FRAME) /	PERIMETER (O/FRAME) /	REBATE WIDTH /	AREA OVER FOOT /	SLAB VOLUME
159.1 m²	59.06 m	120 mm	166.19 m²	13.52 m³

G.F F.F.L	0.000 m
G.F T.P.	2.440 m

TRIDENTHOMES
DUNEDIN

Project : PROPOSED NEW DWELLING for Client : Nicole & Brent Young Address : 31 Owhiro Avenue, Mosgiel	JOB # : 31_Owhiro	Drw Name : FLOOR PLAN			Builder.	Client.
	Drawn By : LBP 113870	DATE : MAY 2019	NOTE : do not scale from this drawing.	SCALE @ A3 Sht. As indicated	REV # C	DRW # 02

DUNEDIN CITY COUNCIL - Approved Building Consent Document
ABA-2019-851

50mm 100mm Original Scale

50mm

100mm

NOTE:
1) Allow for stays to fire flue.
2) Drapes / Curtains are to be restrained to maintain the minimum clearances to fire for heat sensitive materials.

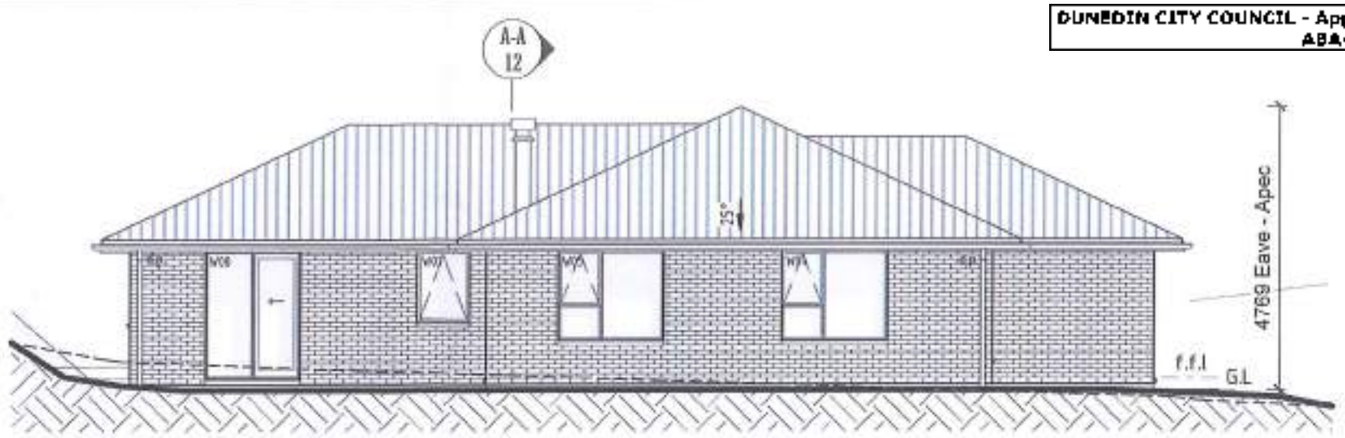

North Elevation
Scale 1 : 100

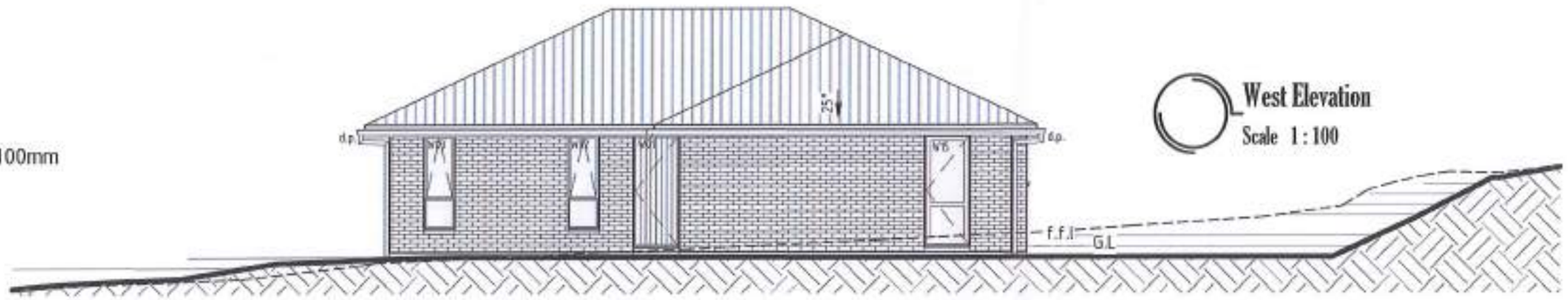

West Elevation
Scale 1 : 100

BUILDING ENVELOPE RISK MATRIX.

Risk Factor -	Risk -	Score -	Comments -
Wind Zone -	High Risk	1	High Wind Zone.
Number of storeys -	Low Risk	0	One Storey.
Roof/wall design -	Low Risk	0	Fully Protected.
Eaves width -	High Risk	2	101 - 450mm single storey.
Envelope complexity -	Low Risk	0	Single cladding.
Deck design -	Low Risk	0	Nil.
Total risk score -		3	

NOTE: This risk matrix covers all four elevations.

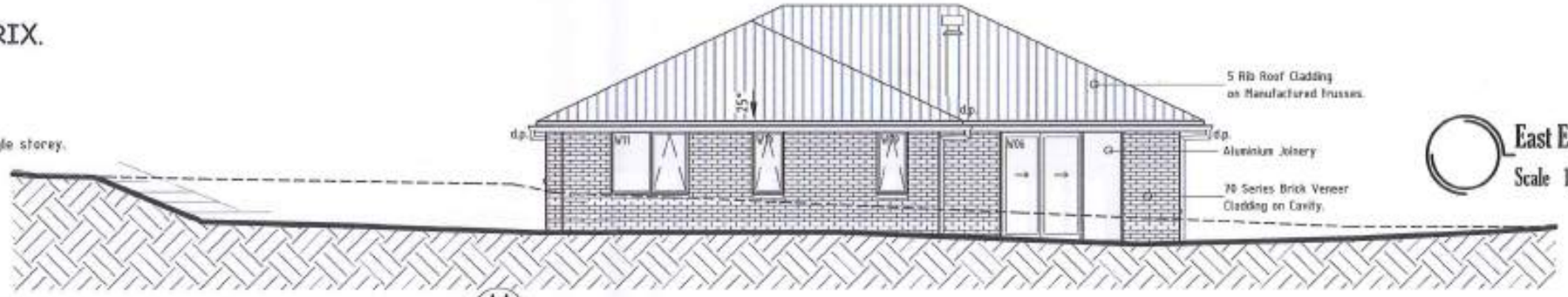

East Elevation
Scale 1 : 100

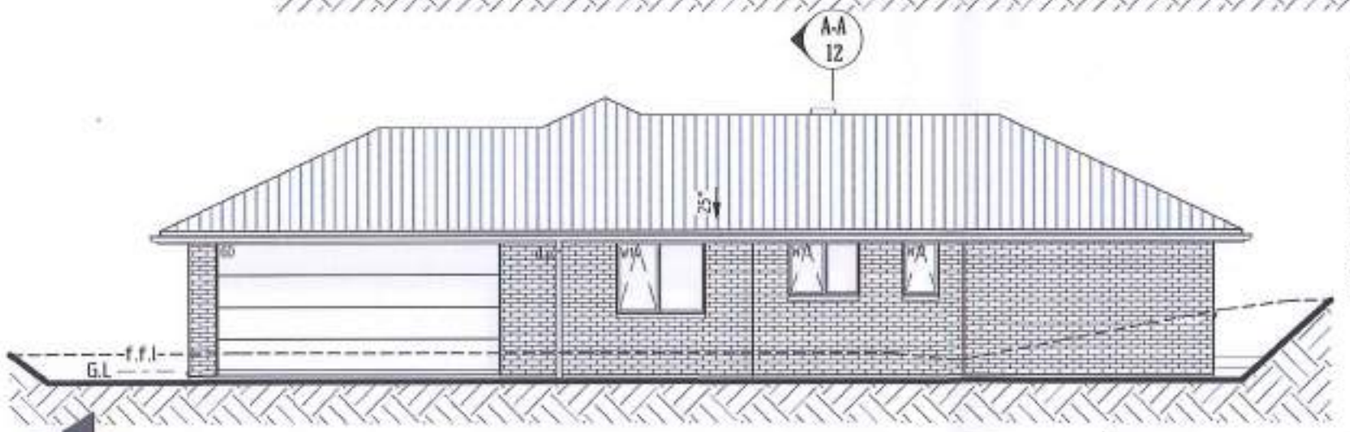

CLAD TO GROUND CLEARANCE NOTES.

f.f.l shall be 150min above crown of road on at least one cross section through the building and road way, or for sites below the road 150min above the lowest point on the Site Boundary.
Excavate locally around perimeter of building, ground to fall away from building not less than 1 in 25 for a minimum distance of 1000mm.
Brick veneer adjacent to permanent paving - F.G.L to f.f.l 125min.
F.G.L to Base of footing rebate (Weep holes) 25min.
Brick veneer adjacent to unprotected ground - F.G.L to f.f.l 200min.
F.G.L to Base of footing rebate (Weep holes) 100min.

South Elevation
Scale 1 : 100

TRIDENTHOMES
DUNEDIN

Project : PROPOSED NEW DWELLING for Client : Nicole & Brent Young Address : 31 Owhiro Avenue, Mosgiel	JOB # : 31_Owhiro	Drw Name : ELEVATIONS		Builder.	Client.
	Drawn By : LBP 113870	DATE : APRIL 2019	NOTE : do not scale from this drawing.	SCALE @ A3 Sht. As indicated	REV # B	DRW # 03

3/04/2019 10:15:49 a.m.

DUNEDIN CITY COUNCIL - Approved Building Consent Document
ABA-2019-851

50mm 100mm Original Scale

50mm

100mm

RIBRAFT FOUNDATION NOTES.

Allow for Ribraft foundation system as specified, installed in accordance with the Ribraft technical manual (Refer to project spec).

Site General - The site requirements of the Ribraft Manual are concerned solely with the soil conditions under or immediately adjacent to the system. If a site does not comply with the Manual the system shall be subject to specific engineering design.

Temporary Excavations - No excavation shall take place at a location or in a manner where the stability of the foundation material is likely to be compromised. The backfilled material shall match the compaction and strength of, and have similar properties to, the surrounding material. The sides of the excavation shall be propped as necessary. Temporary excavations shall be open for no longer than 48 hours and shall take place only above the critical depth line as shown on Figure 2 in Ribraft manual. Should temporary excavations be required below this line, specific engineering design is required.

Surface Water - Surface water from the site shall not flow across the slab platform eg on cut and fill sites the ground uphill from the system shall be graded to direct any surface run-off away from the system.

Site Preparation - All vegetation, topsoil and other organic or deleterious material shall be removed from the area to be covered by the building (formation area) prior to commencing construction of the system.

Earthworks - The formation area shall be cut or filled to a level approximately 330mm below finished floor level. Where fill is required to achieve this level, the fill shall be certified by a geotechnical engineer (outside the scope of the Ribraft Manual) or shall be granular fill in accordance with Clause 7.5.3 of NZS 3604:2011. The formation area shall extend a minimum of 1000mm beyond the slab perimeter. The installer shall confirm the acceptability of the ground over the entire building platform before proceeding with the construction. Refer to Ribraft manual Clause 3.5 of Section 1 (Design Information) for requirements.

OTHER NOTES:

1) Concrete to be 85mm thick 20MPa Firth Raftmix or Raftmix pump 100mm slump structural mix.
2) Allow for 0.25mm min polyethylene DPC on 50max sand blinding layer screeded and compacted extending at least 500mm beyond perimeter of foundations.
3) Refer to Ribraft spec for steel requirements, allow for 665 Class E mesh with 225min mesh laps.
4) Ground under floor system to be good ground as defined in NZS3604:2011 Sec 3.1.3. If good ground can not be established refer to engineer for SED.
5) Polyethylene lap joints to have 150min overlap and sealed with pressure sensitive lap tape 50min wide, unless self sealing polythene sheets are used. Penetrations by services, reinforcing or other objects are to be sealed with taping, or by application of wet-applied damp proof membrane material (All damage to DPM to be made good).
6) Allow for 12 x 135mm through bolt bottom plate anchors fastened & located as specified by manufacturer, allow for fixings @ 900crs max located within 150mm of each end of bottom plates with 65min embedment & 60min edge distance where applicable.
7) All bottom plates to have a DPC separation layer from Concrete slab.
8) Refer to Table 7 Ribraft manual for Service penetration guidelines.

FOUNDATION PLAN LEGEND.

All dimensions over footing face unless noted otherwise.

2/HD12 @ 1.2m Long (Grade 500E) @ 200crs tied to top of mesh with 50mm cover from internal corners. — 2/HD12

Shrinkage control joints - 25mm deep x 5mm wide saw cut no later than 24 hours.

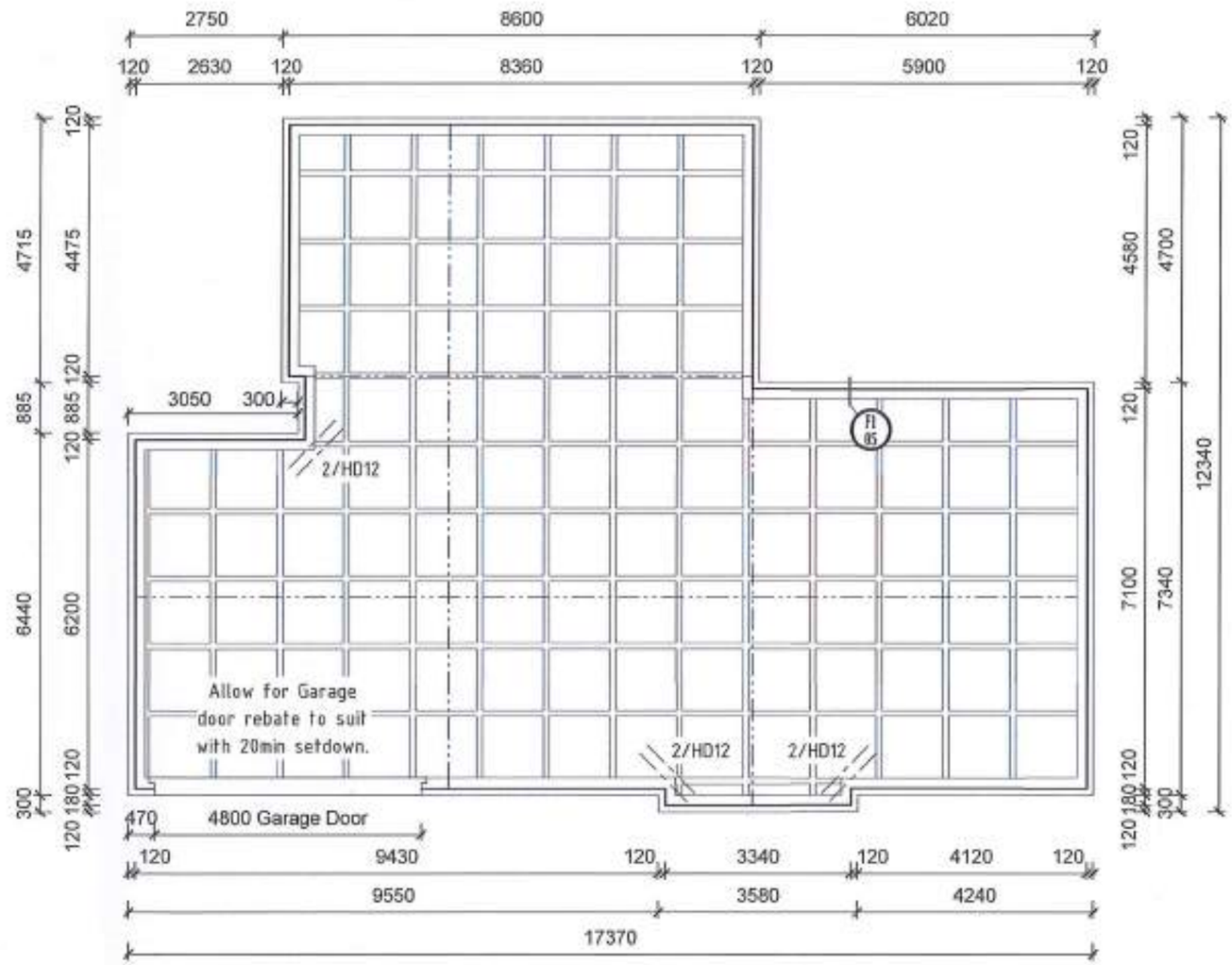

FOUNDATION PLAN
Scale 1:100

FLOOR AREA SCHEDULE - BV

AREA (O/FRAME) /	PERIMETER (O/FRAME) /	REBATE WIDTH /	AREA OVER FOOT /	SLAB VOLUME
159.1 m²	59.06 m	120 mm	166.19 m²	13.52 m³

N

TRIDENTHOMES
DUNEDIN

Project : PROPOSED NEW DWELLING for Client : Nicole & Brent Young Address : 31 Owhiro Avenue, Mosgiel	JOB # : 31_Owhiro	Drw Name : FOUNDATION PLAN		Builder:	Client:
	Drawn By : LBP 113870	DATE : APRIL 2019	NOTE : do not scale from this drawing.	SCALE @ A3 Sht. As indicated	REV # B	DRW # 04

3/04/2019 10:15:52 a.m.

DUNEDIN CITY COUNCIL - Approved Building Consent Document
ABA-2019-851

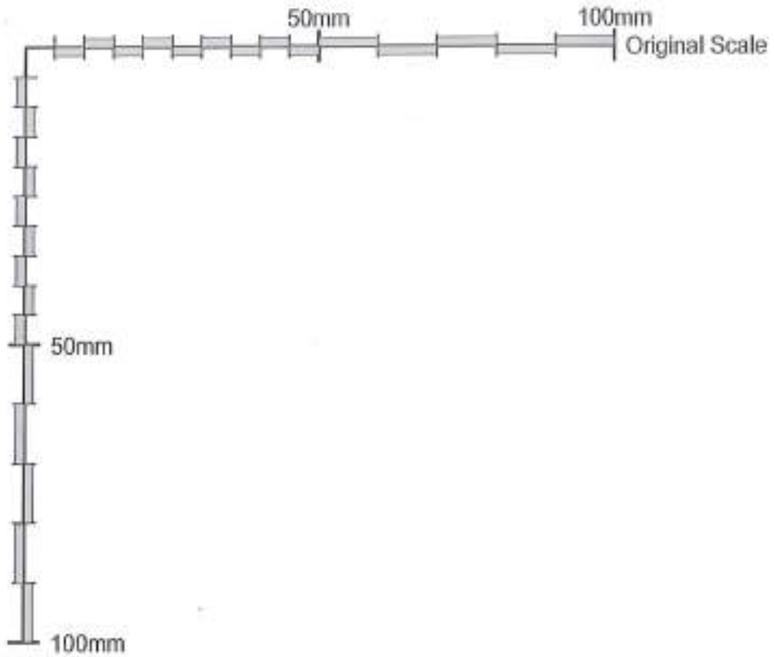

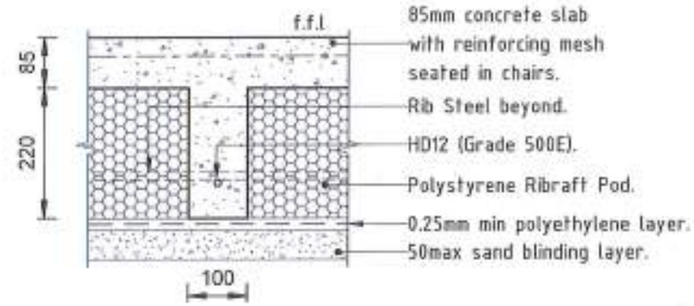

RR1 **RIBRAFT INT RIB DETAIL**
Scale 1 : 10

Anchor Note: Slab edge formed with insitu concrete -
M12 galvanized engineers bolts with 50x50x3mm Washers @ 1200crs max, within 150mm of each end of bottom plate, set no less than 90mm into the concrete maintaining a minimum edge distance of 50mm, Or Proprietary post fixed anchors installed to manufacturers specifications.

Anchor Note: Allow for 12 x 135mm through bolt bottom plate anchors fastened & located as specified by manufacturer, allow for fixings @ 900crs max located within 150mm of each end of bottom plates with 65min embedment & 60min edge distance where applicable.

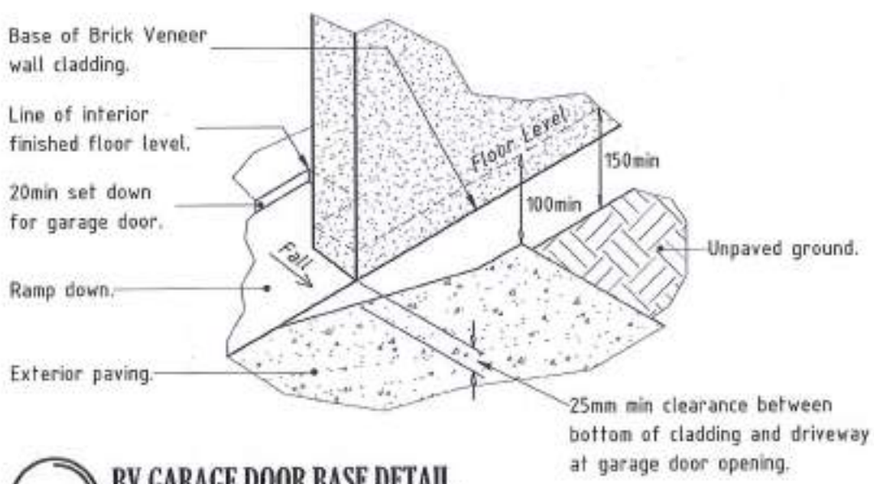

BV GARAGE DOOR BASE DETAIL
Scale : N.T.S

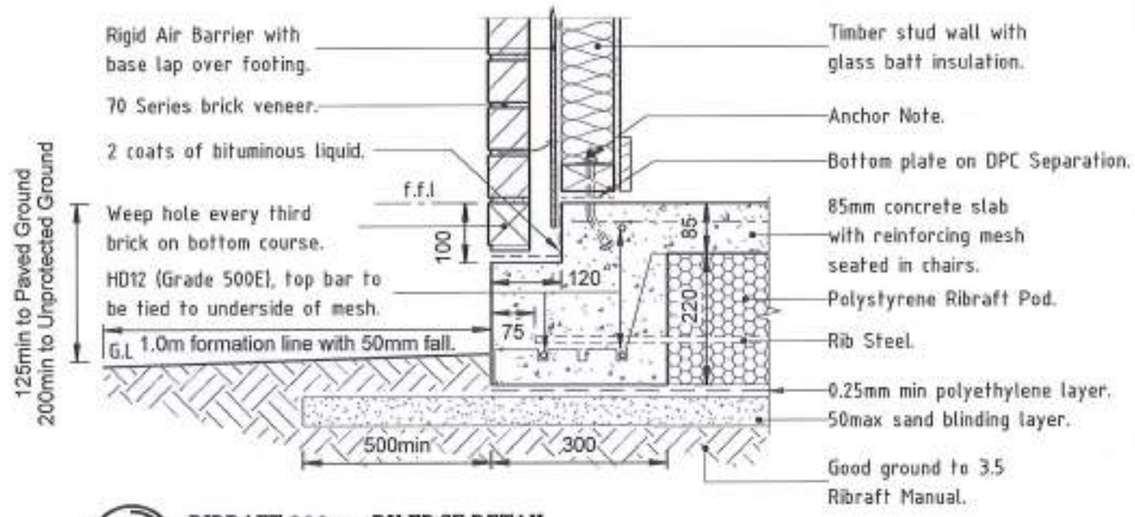

NOTE - Brick veneer to overhang footing by 0-20mm

F1 **RIBRAFT 300mm BV EDGE DETAIL**
Scale 1 : 10

TRIDENTHOMES
DUNEDIN

Project : PROPOSED NEW DWELLING for Client : Nicole & Brent Young Address : 31 Owhiro Avenue, Mosgiel	JOB # : 31_Owhiro	Drw Name : FOUNDATION DETAILS			Builder.	Client
	Drawn By : LBP 113870	DATE : APRIL 2019	NOTE : do not scale from this drawing.	SCALE @ A3 Sht. 1 : 10	REV # B	DRW # 05

3/04/2019 10:15:53 a.m.

DUNEDIN CITY COUNCIL - Approved Building Consent Document
ABA-2019-851

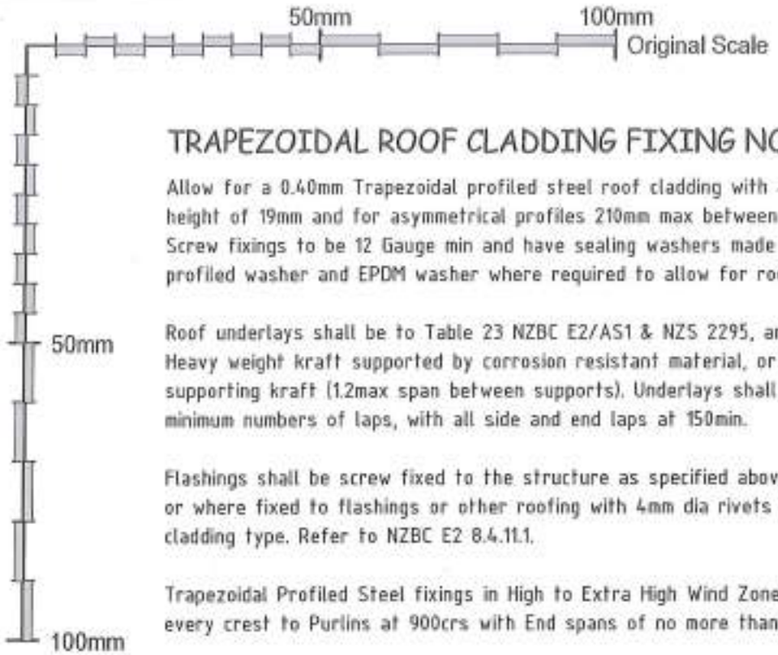

TRAPEZOIDAL ROOF CLADDING FIXING NOTES.

Allow for a 0.40mm Trapezoidal profiled steel roof cladding with a minimum profile height of 19mm and for asymmetrical profiles 210mm max between crests.
Screw fixings to be 12 Gauge min and have sealing washers made from neoprene or profiled washer and EPDM washer where required to allow for roof expansion.

Roof underlays shall be to Table 23 NZBC E2/AS1 & NZS 2295, and be either R1 Heavy weight kraft supported by corrosion resistant material, or R2 Self supporting kraft (1.2max span between supports). Underlays shall be laid with minimum numbers of laps, with all side and end laps at 150min.

Flashings shall be screw fixed to the structure as specified above for roof fixing, or where fixed to flashings or other roofing with 4mm dia rivets to suit roof cladding type. Refer to NZBC E2 8.4.11.1.

Trapezoidal Profiled Steel fixings in High to Extra High Wind Zones to be fixed at every crest to Purlins at 900crs with End spans of no more than 600mm.

ROOF AREA & BRACING SCHEDULE - Hip & Gable

PITCH	SURFACE AREA	PLAN AREA	Light Roof	Braces Required	Hips & Valleys	Additional Braces Required	ROOF BRACING REQUIRED
25°	214.7 m²	194.6 m²	Yes	4	8	0	No

DOWN PIPE SCHEDULE

PITCH	Prefix	Size	Max Area Served
Allow for Stratco Quad gutter with 6,200mm² cross section area.			
25.00°	d.p.	80Ø	85 m²
25.00°	d.p.	80Ø	85 m²
25.00°	d.p.	80Ø	85 m²
Total Roof Area Served			255 m²

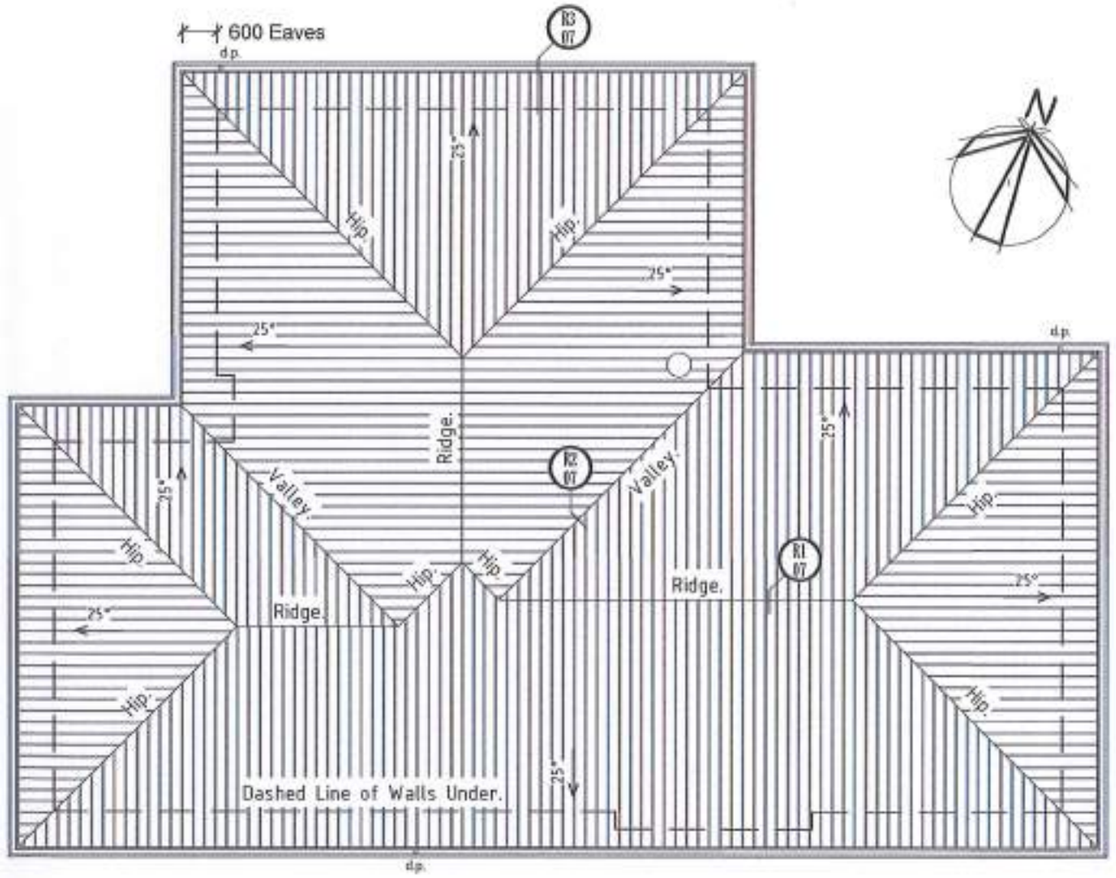

ROOF PLAN
Scale 1:100

TRIDENTHOMES
DUNEDIN

Project : PROPOSED NEW DWELLING for Client : Nicole & Brent Young Address : 31 Owhiro Avenue, Mosgiel	JOB # : 31_Owhiro Drawn By : LBP 113870	Drw Name : ROOF PLAN DATE : APRIL 2019	NOTE : do not scale from this drawing.	SCALE @ A3 Sht. As indicated	Builder.	Client.
					REV # B	DRW # 06

3/04/2019 10:15:56 a.m.

DUNEDIN CITY COUNCIL - Approved Building Consent Document
ABA-2019-851

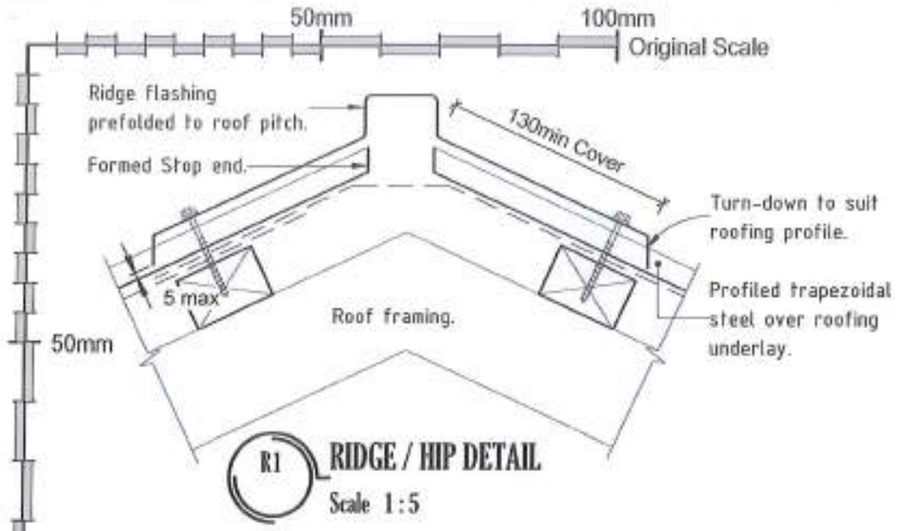

R1 RIDGE / HIP DETAIL
Scale 1:5

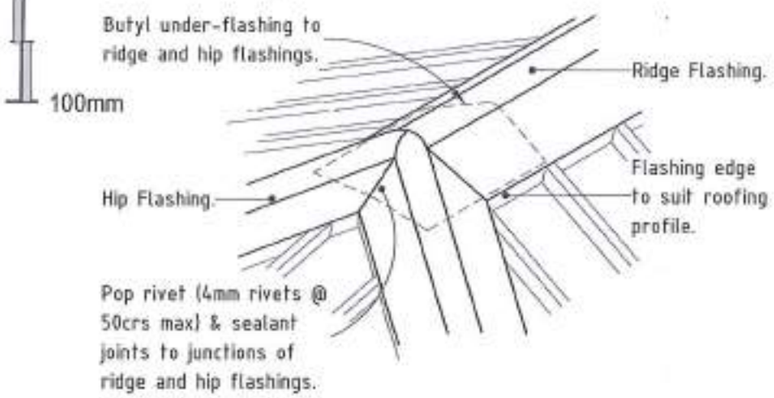

RIDGE / HIP FLASHING DETAIL
Scale 1:1

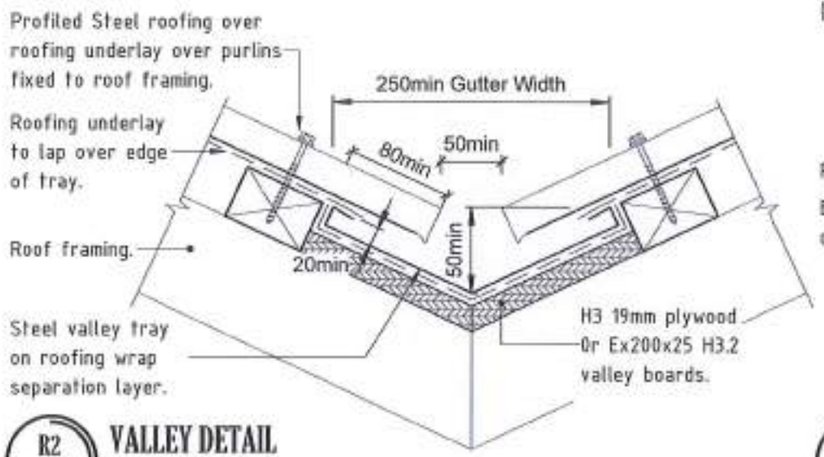

R2 VALLEY DETAIL
Scale 1:5

NOTE :
(1) Max roof pitch 45°, 10°min if base flange covers one or more complete troughs.
(2) For pipes up to 85mmØ
(3) Not to be used on a side lap.

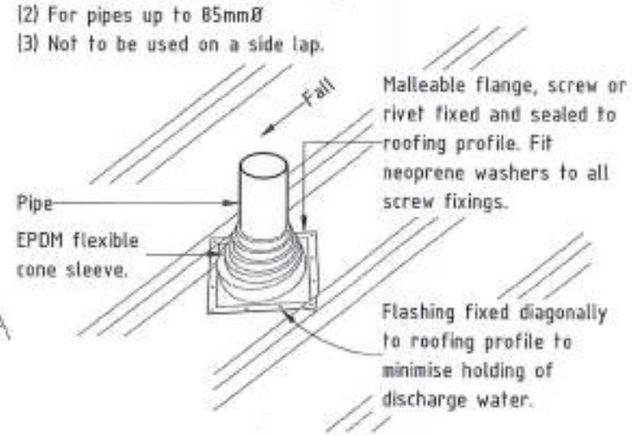

PIPE FLASHING DETAIL (Up to 85 DN)
Scale 1:10

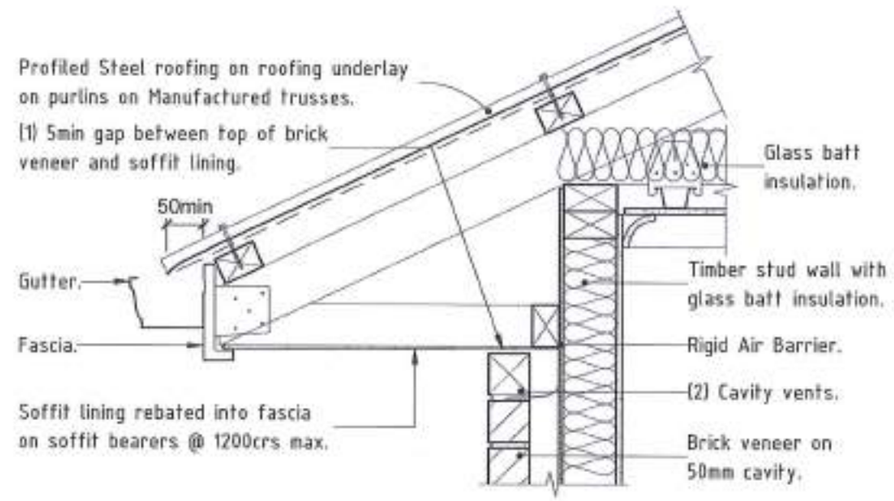

NOTE: (1) Allow for 5min Gap between top of block work and soffit level OR (2) Allow for Perpend cavity vents for Ventilation.

R3 BRICK VENEER EAVES DETAIL
Scale 1:10

TRIDENTHOMES
DUNEDIN

Project : PROPOSED NEW DWELLING for Client : Nicole & Brent Young Address : 31 Owhiro Avenue, Mosgiel	JOB # : 31_Owhiro Drawn By : LBP 113870	Drw Name : ROOF FLASHING DETAILS			Builder	Client
		DATE : APRIL 2019	NOTE : do not scale from this drawing.	SCALE @ A3 Sht. As indicated	REV # B	DRW # 07

3/04/2019 10:15:58 a.m.

DUNEDIN CITY COUNCIL - Approved Building Consent Document
ABA-2019-851

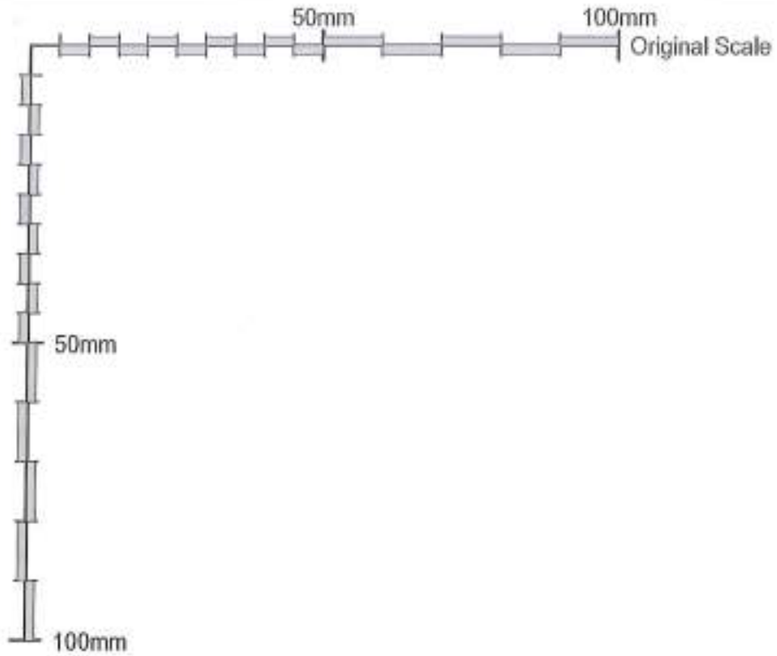

WALL BRACING LEGEND.

(A) —— Bracing Line
A1/1.200/GS1-N
Bracing #/ Length/ Element type
All wall bracing to conform with manufacturers specifications.

Code	Description	Bracket
GS1-N	Gib Std One Side Only	No
HP	Home RAB one Side	Yes

Each wall with bracing elements to be connected to an external wall either directly by intersecting top plates or by rafters, trusses, purlins or through framing as detailed below.

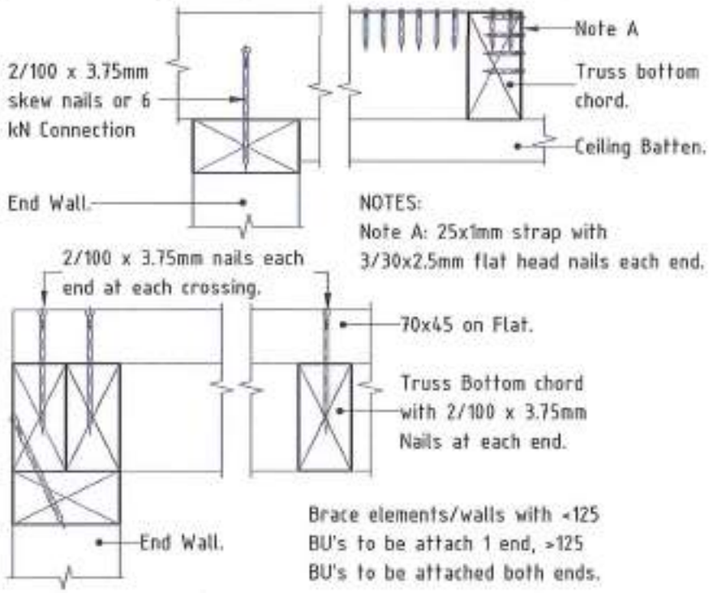

INTERNAL BRACING WALL LATERAL SUPPORT
Scale 1:5

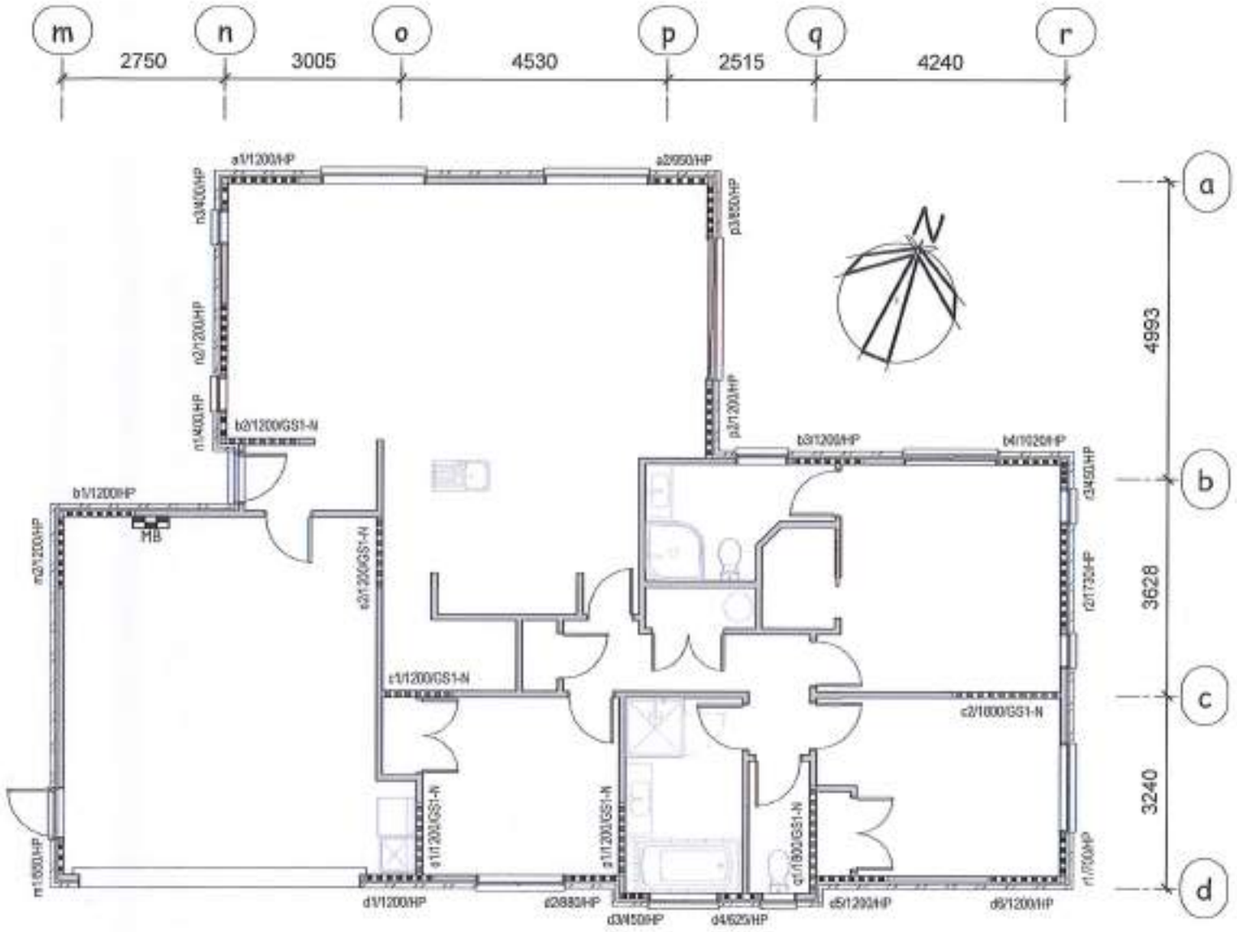

BRACING PLAN
Scale 1:100

TRIDENTHOMES
DUNEDIN

Project : PROPOSED NEW DWELLING for Client : Nicole & Brent Young Address : 31 Owhiro Avenue, Mosgiel	JOB # : 31_Owhiro	Drw Name : BRACING PLAN		Builder.	Check
	Drawn By : LBP 113870	DATE : APRIL 2019	NOTE : do not scale from this drawing.	SCALE @ A3 Sht. As indicated	REV # B	DRW # 08

3/04/2019 10:16:01 a.m.

DUNEDIN CITY COUNCIL - Approved Building Consent Document
ABA-2019-851

50mm 100mm Original Scale

50mm

100mm

MECHANICAL VENTILATION NOTES:

Install mechanical ventilation (Extractor fans) as specified on plan with min flow rate as specified below. Allow for air replacement inlet grill as required by the manufacturers specification, fan to be controlled by infrared, humidity sensor or switch with timer. NOTE : Mechanical extraction is required to terminate to an external air space, ie through Roof, External Wall or under Soffit.
AS 1668.2 Exhaust Rates.
Bathroom & Toilets - 25l/s per Room.
Laundry - 20l/s per Room.
Kitchens - 50l/s per Room.

ELECTRICAL LEGEND

R - Rangehood Extractor.
V - Vent - Ceiling extracted.

DRAINAGE LEGEND

Ip	Inspection Point.
O.G.T	Overflow relief Gully trap.
TV	Terminal vent - DN 50.
aav	Air Admittance Valve.
—BD—BD—	Foul sewer Branch Drain - DN 100 @ 1:60 min fall.
—FS—FS—	Foul sewer Main Drain - DN 100 @ 1:60 min fall.
----------	Fixture discharge pipe - Refer to fixture legend for sizing.
—HWC—HWC—	25dia Copper HWC Relief Drain + Separate 40mm PVC drain from safe tray, discharge both drains to a visible position which does not present a hazard or damage to other building elements.
FSC	Existing Foul Sewer Connection Point.

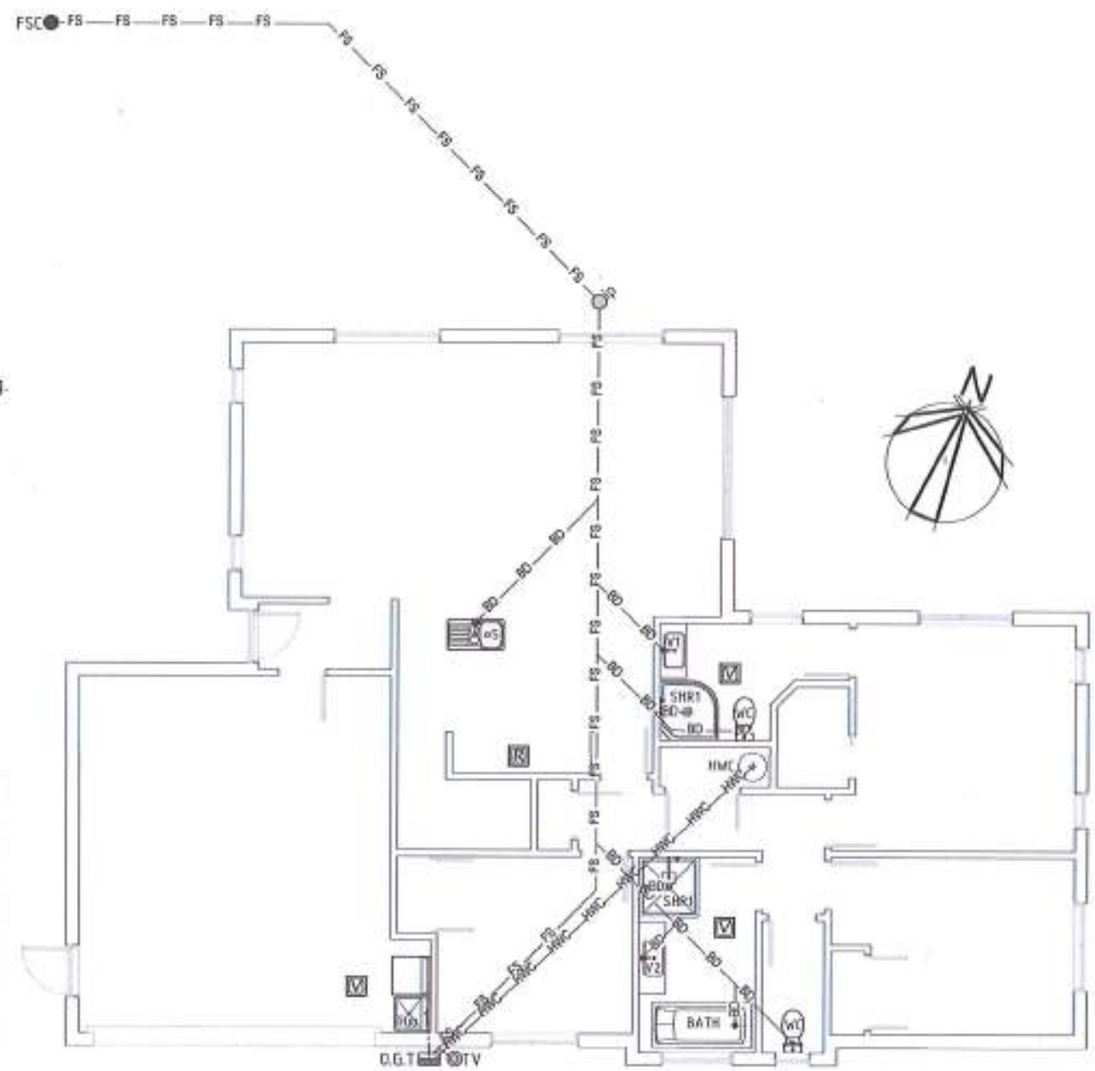

PLUMBING - FIXTURE SCHEDULE AS/NZS 3500 - MAINS PRESSURE.

Code	#	Description	Model	Fixture Construction Standards	Pipe DU's	Pipe Size	Gradient	Max Unvented Developed Length	Vent Pipe Size	HW Pipe ø	General Notes
BATH	1	Bath	Astivita Veneto	NZS 2023	4 DU's	DN 40	1:40	2.5m	DN 40	15mm*	*Based on 20max pipe run
HWC	1	Hot Water Cylinder	Mains Pressure	NZS 4606: Parts 1-3		N/A					Unvented - Relief valve drain to NZBC G12 6.7
S	1	Kitchen Sink	Proprietary	NZS 1730	3 DU's	DN 40	1:40	2.5m	DN 32	15mm*	*10mm for pipe run >12m
SHR1	2	Acrylic shower	1000x1000mm	AS3588	2 DU's	DN 40	1:40	2.5m	DN 32	20mm*	*15mm for seperate pipe from HWC to single outlet
Tub	1	Laundry Tub	Proprietary	NZBC G2/AS1	5 DU's	DN 40	1:40	2.5m	DN 32	15mm*	*Based on 20max pipe run.
V1	1	Vanity	900x400mm	NZS 1730	1 DU	DN 40	1:40	2.5m	DN 32	10mm*	*Based on 20max pipe run.
V2	1	Vanity	1200x400mm	NZS 1730	1 DU	DN 40	1:40	2.5m	DN 32	10mm*	*Based on 20max pipe run.
WC	2	Toilet	S Trap	G1/AS1	4 DU's	DN 100	1:60	6m	DN 40	N/A	Cisten Flush
WM	1	Washing Machine	Proprietary	-	-	-	-	-	-	-	Discharge to Laundry Tub
Total Fixtures: 11											

PLUMBING PLAN
Scale 1 : 100

TRIDENTHOMES
DUNEDIN

Project : PROPOSED NEW DWELLING for Client : Nicole & Brent Young Address : 31 Owhiro Avenue, Mosgiel	JOB # : 31_Owhiro	Drw Name : PLUMBING PLAN			Builder:	Client:
	Drawn By : LBP 113870	DATE : APRIL 2019	NOTE : do not scale from this drawing.	SCALE @ A3 Sht. As indicated	REV # B	DRW # 09

3/04/2019 10:16:03 a.m.

DUNEDIN CITY COUNCIL - Approved Building Consent Document
ABA-2019-851

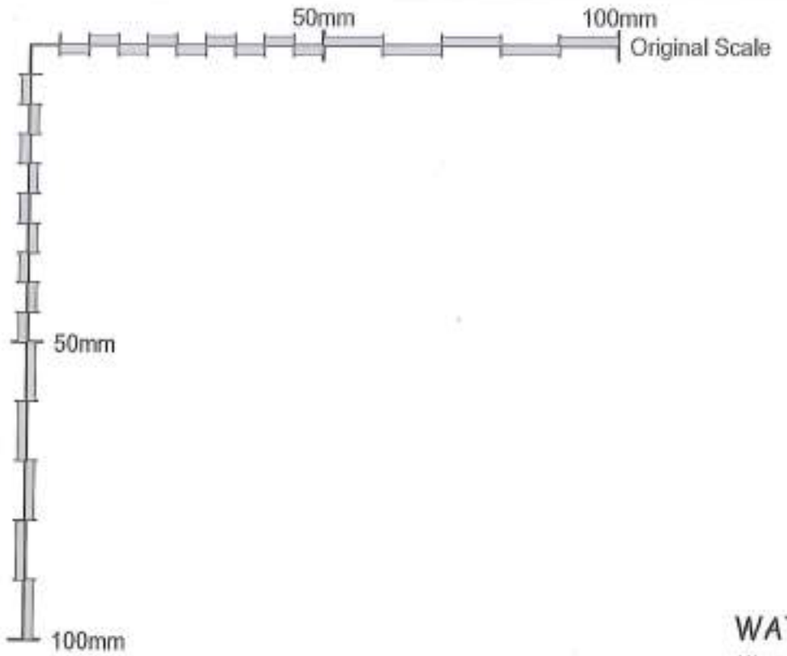

WATER HEATING NOTES:

Allow for the Installation of a Mains pressure HWC (to G12/AS1 - NZS 4606:Parts 1, 2 & 3), plumbed in accordance with NZBC:G12/AS1 Mains pressure storage water heater system (Unvented). Water heaters to be installed in accordance with the manufacturers instructions, supplied with cold water at a pressure not exceeding their working pressure. Maximum water temperature to any sanitary fixture used for personnel hygiene to be 55°C, with thermostat set at no less than 60°C. Fix water heater with manufacturers code compliant seismic restraint wrap with all fittings compliant to the cylinder manufacturer's specifications. Allow for Safe tray complying with G12 5.2.3 with a 40min drain pipe, discharge to a visible place that does not create a nuisance or damage to building elements, allow for vermin proofing to end of discharge pipe. HWC to have a conveniently located isolating valve that terminates with a cap or plug suitably located to easily empty the vessel for maintenance, or terminate outside the building with a cap only.

Flow rates to sanitary fixtures - Table 3 NZBC G12.
NOTE: Flow rates shall be capable of being delivered simultaneously to Kitchen sink and one other fixture.

Sanitary Fixture.	Flow rate & Temp L/s &°C.	How measured.
Bath	0.3 @ 45°C	Mix hot and cold.
Basin	0.1 @ 45°C	Mix hot and cold.
Shower	0.1 @ 42°C	Mix hot and cold.
Sink & Laundry Tub	0.2 @ 60°C (Hot) & 0.2 (Cold)	Flow rates required at both taps but not simultaneously..

ADDITIONAL NOTES:

Water Supply materials and components shall comply with BS 6920 if non-metallic or AS/NZS 4020 if metallic or non-metallic.
Vitreous china used in sanitary appliances to NZBC G1, AS 1976:1992.

PLUMBING & DRAINAGE NOTES, AS/NZS 3500.

All sanitary plumbing and drainage work to be carried out in accordance with AS/NZS 3500 Part 2 (As modified by NZBC G13/AS3), all materials and products shall comply with NZBC B2 (Durability) and G13/AS1 (Paragraph 2.0 materials). Pipework shall be from uPVC Pipes bends, junctions, fittings and joints to AS/NZS 1260. Air admittance valves to ASSE 1050 or ASSE 1051, EN 12380, AS/NZS 4936, Plastic traps and fittings to AS 2887, Copper pipe to NZS 3501 & copper fittings to AS 1589. Contractor to locate and check all service invert levels, falls, fixture positions and pipe routes before commencement of any work. All above ground sanitary plumbing pipework shall be water tested to AS/NZS 2032 or Air tested to clause 12.3.2 AS/NZS 3500.2.2.

DRAINS;

Main Drain DN 100 uPVC, min 1:60 gradient or min 1:80 gradient for drains at reduced grades (18DU's Min - 120DU's Max).
Branch Drains - DN 100 uPVC, min 1:60 gradient.
Sanitary Wastes - Refer to Fixture Schedule.

HOT WATER CYLINDER WASTE;
Pressure relief Valve drain - Allow for Sleeved 25mm dia Copper waste pipe with a continuous fall from the relief valve, terminate 25min above the highest point of a Gully trap OR discharge to a visible position which does not present a hazard or damage to other building elements. Ensure pipe has continuous fall to outlet, length in meters plus number of changes in direction shall not exceed 12.

OVERFLOW GULLY TRAP;
Allow for Overflow gully trap, charge via hose tap above gully or fixture discharge drain. The vertical distance between the overflow of the gully and the lowest fixture connected to the system to be >150mm.

FOUL DRAINS ABOVE GROUND;
Drains above ground under buildings shall be protected from mechanical damage and supported to manufacturers recommendations, or for uPVC DN 40-50 vertically at 2m crs & 1m crs for graded drains & uPVC DN 65-150 vertically at 2.5m crs & 1.2m crs for graded drains. Provisions for expansion shall be made.

RIBRAFT -
Refer to Ribraft Technical manual Clause 6.3 (Refer to projects spec) for plumbing and drainage requirements.

INSPECTION OPENINGS;

Provide inspection openings on drains carrying soil waste as close as possible to the building but not further than 2.5m, at intervals less than 30m, at the downstream end of drains under buildings, at a 'Jump up', at connections to sewer or existing drain, and at changes in direction or gradient greater than 45°.

VENTING & AIR ADMITTANCE VALVES;

Terminal vent - Allow for DN 50 Vent at upstream end of drain, Vent pipes to ascend at a min gradient of 1:80, minimum size of any drain that serves as a vent to be 65mm. Vent to be located downstream of a fixture connection OR gully trap, but not more than 10m from head of drain.

TRIDENTHOMES
DUNEDIN

Project : PROPOSED NEW DWELLING for Client : Nicole & Brent Young Address : 31 Owhiro Avenue, Mosgiel	JOB # : 31_Owhiro Drawn By : LBP 113870	Drw Name : PLUMBING NOTES DATE : APRIL 2019	NOTE : do not scale from this drawing.	SCALE @ A3 Sht. 1 : 50	Builder. REV # B	Client. DRW # 10

30/4/2019 10:16:05 a.m.

DUNEDIN CITY COUNCIL - Approved Building Consent Document
ABA-2019-851

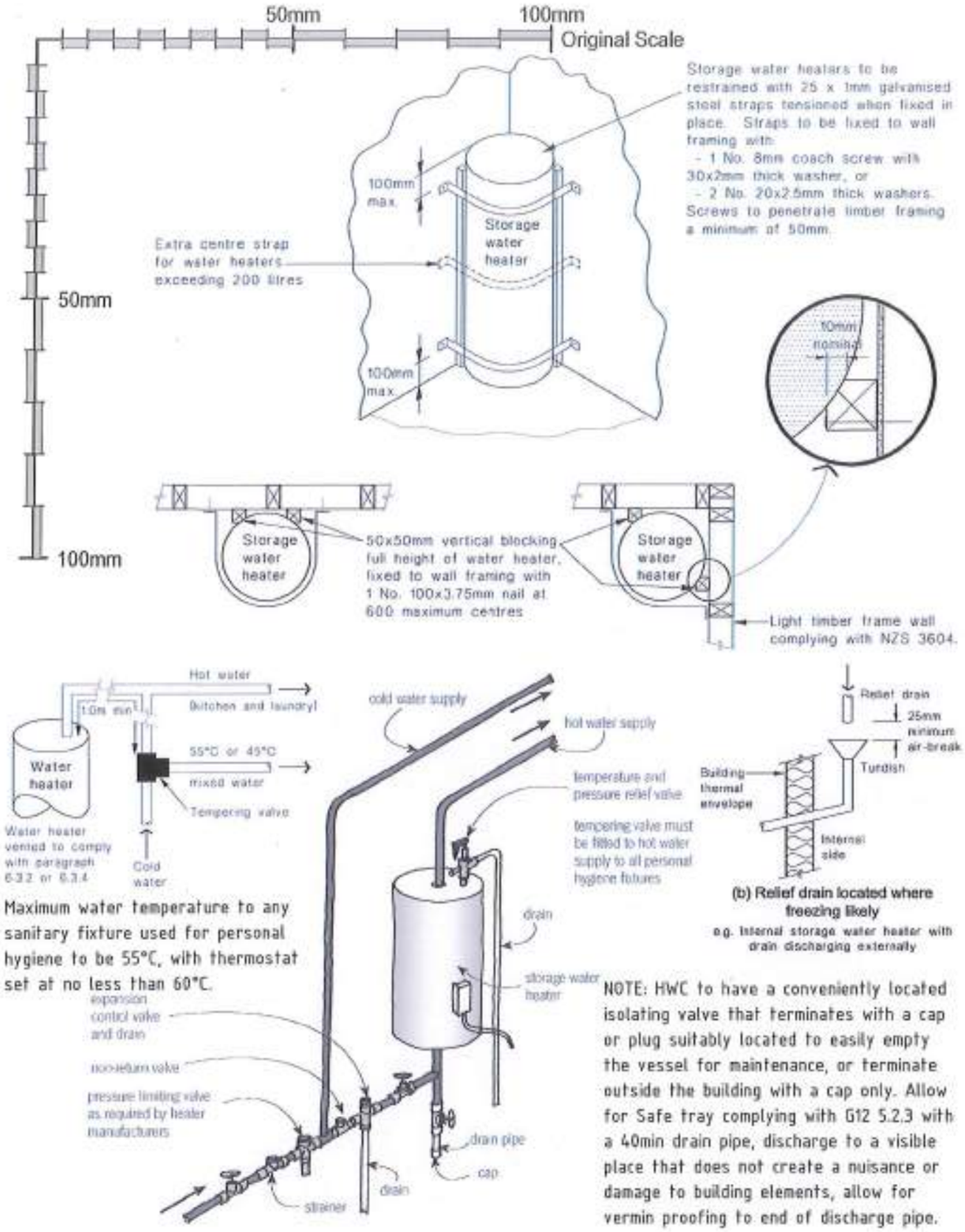

(b) Relief drain located where freezing likely
e.g. Internal storage water heater with drain discharging externally

Maximum water temperature to any sanitary fixture used for personal hygiene to be 55°C, with thermostat set at no less than 60°C.

NOTE: HWC to have a conveniently located isolating valve that terminates with a cap or plug suitably located to easily empty the vessel for maintenance, or terminate outside the building with a cap only. Allow for Safe tray complying with G12 5.2.3 with a 40min drain pipe, discharge to a visible place that does not create a nuisance or damage to building elements, allow for vermin proofing to end of discharge pipe.

MAINS PRESSURE HWC UNVENTED SCHEMATIC

Scale : N.T.S

PIPE TRENCH TO BUILDING FOUNDATION RELATIONSHIP.

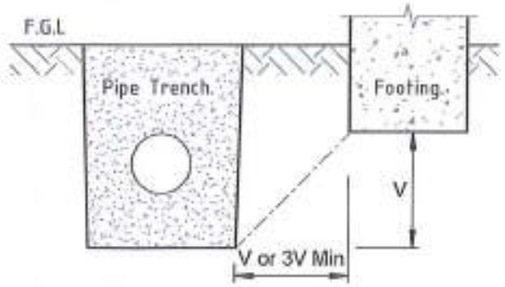

Pipe trenches which are open for no longer than 48 hours shall be located no closer than V to the underside of any building foundation, where the trench is to remain open for periods longer than 48 hours the minimum horizontal separation shall increase to 3V in all ground except rock.

WATER SUPPLY NOTES:

Allow for water supply to G12/AS1, Water supply pipework & fittings shall be approved proprietary Polybutylene tubing to AS/NZS 2642 Parts 1, 2 & 3 complete with fittings and accessories brand-matched. All copper pipe work to NZS 3501 complete with copper-alloy compression fittings, or crox type joints and seal ring compression joints complete with fittings and accessories brand matched to the pipe manufacturer's specifications. Water supply systems to be installed to comply with the durability requirements of NZBC B2. Insulate all hot water systems to "NZS 4305 Energy Efficiency" and to the manufacturer's specifications. Insulate piping outside the thermal envelope where there is a likelihood of freezing. Water supply system to be tested to ensure weathertightness by subjecting the hot & cold system to a pressure of 1500 KPa for >15mins, inspect the system for leaks.

PROTECTION OF WATER SUPPLY PIPES BELOW GROUND -
Provide protection to water supply pipes below ground as follows, Residential driveways and similar areas - 600min ground cover, Gardens & Lawns or other areas not subject to traffic 450min ground cover. Pipes penetrating concrete or masonry elements shall be wrapped in a flexible material or pass through a sleeve or Duct. NOTE: Min cover may need to be increased where the likelihood of freezing is present, increase cover to ensure piping is below a level affected by freezing.

ABOVE GROUND PIPEWORK -
Above ground supply pipework to be securely supported at centers listed in Table 7 NZBC G12/AS1. Provide anchor points where seal ring joints are used and the joint is not able to resist the trust imposed by the water pressure.

BEDD

Acceptable method for the bedding and backfilling of drainage pipes except where the trench is located within or above peat, Scouring of the trench is likely due to unstable soils, or the cover H to the pipe is more than 2.5m.

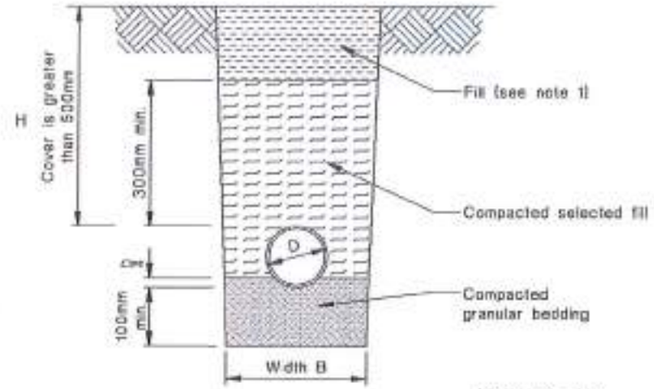

(a) Bedding type 'B' of NZS 7643
Cover greater than 500mm

Width B = No less than pipe dia plus 200mm

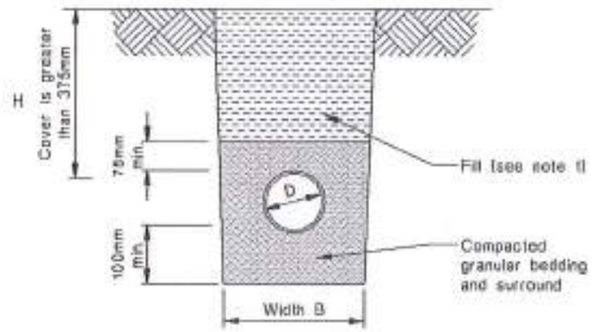

(b) Bedding type 'D' of NZS 7643
Cover greater than 375mm

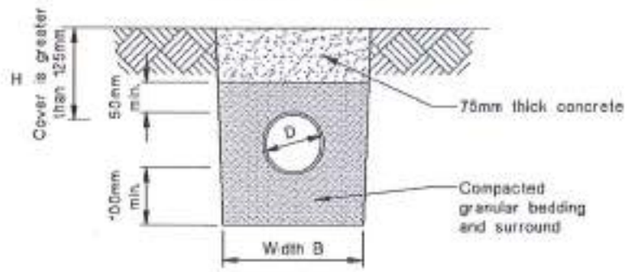

(c) Cover between 125mm and 375mm

Note 1: Fill to be ordinary fill where drain located below gardens and open country, allow for compacted selected fill below residential driveways and similar areas subject to light traffic.

Additional Notes: The trench width at the top of the pipe to be no more than 600mm unless covered with 75min concrete topping.

TRIDENTHOMES
DUNEDIN

Project : PROPOSED NEW DWELLING for Client : Nicole & Brent Young Address : 31 Owhiro Avenue, Mosgiel	JOB # : 31_Owhiro	Drw Name : HWC & DRAINS IN GROUND			Builder.	Client
	Drawn By : LBP 113870	DATE : APRIL 2019	NOTE : do not scale from this drawing.	SCALE @ A3 Sht. As indicated	REV # B	DRW # 11

3/04/2019 10:16:08 a.m.

DUNEDIN CITY COUNCIL - Approved Building Consent Document
ABA-2019-851

50mm 100mm Original Scale

50mm

100mm

WIND SPECIFIC FIXING SCHEDULE - HIGH WIND ZONE.

NOTE : Allow for fasteners as specified or alternative fasteners with an equivalent capacity.

Connection / Junction	Required fixing Type or Alternative fixing requirements.
Purlins - Roof framing.	1/10g self drilling screw, 80mm long or 2.4kN alternative fixing.
Trusses - Top plate.	Refer to truss manufacturers specification.
Top plate fixing @ 600crs for Walls & Lintels supporting roof members.	2 / 90x3.15 end nails + 2 wire dogs or 4.7kN alternative fixings or as specified in RAB Spec.

GENERAL SPECIFICATION NOTES:

All construction to comply with the current NZBC, NZS 3604:2011, NZ Metal Roof & Wall Cladding COP, Manufacturers specifications, Other standards where relevant and the local territorial authority requirements.
Do not scale from these drawings.
- All timber to be SG8 unless noted otherwise.
- Allow for DPC separation between all timber and concrete.
- All sheltered Wall and Roof framing to be H1.2 treated.
- All External finishing timbers to be H3.1 treated and sealed with a protective paint finish or H3.2 treated for unpainted, clear finish or stained. Where timber members are built up to achieve required thickness eg (2/140x45 to achieve 140x90mm member), they shall be nailed in accordance with NZS3604:2011 2.4.4.7. Fibre cement external linings to have a protective paint finish. All Steel flashings to be 0.55mm Factory Painted Steel.

NOTE : Impervious paint finish must be a quality paint system suitable for the material & environment of use, manufacturers specifications must be followed. Where a protective paint finish is required all surfaces including laps and end grains to be sealed by priming, followed by 2 coats of exterior grade paint to all exposed surfaces.

ROOF STRUCTURE :
Allow for 0.40mm Trapezoidal Factory Painted Steel roofing on roofing underlay on 70x45mm Purlins @ 900crs max (with end crs of no more than 600mm) on Manufactured Trusses. All roof flashings turndown notched to suit roof profile (Allow for 5mm max gap between pan of roofing to turned down flashing edge), allow for formed stopends where specified. All roof flashings to be 0.55mm Factory Painted Steel, Colour matched to roof cladding.

CEILING STRUCTURE :
Allow for 13mm std GIB board linings with R3.6 Glass batt insulation on GIB Rondo System @ 600crs. Allow for 70x45min Bottom chord restraints to truss at crs as specified by truss designer. Wet areas (Bathroom & Ensuite) to have Aqua GIB linings. All linings to be fixed in accordance with latest Gib technical literature.

GUTTER, FASCIA & SOFFIT :
Allow for Factory Painted Steel downpipes, gutters & fascias. External gutters to be installed to ensure any overflow spills to the outside of the building. Soffit linings to be 4.5min fibre cement board with Jointers on soffit bearers @ 1200crs max.

WALL STRUCTURE / CLADDINGS :
Allow for 70 series brick veneer on 50nom cavity over 4.5mm HomeRAB Pro Cladding Barrier on 90x45mm timber studs @ 600crs with R2.6 Glass batt insulation. Allow for 2/90x45 double top plates. Allow for 90x45mm timber studs @ 600crs for internal walls. Insulation not required to Garage space external walls (Excluded from thermal envelope), Insulate garage internal walls with R2.6 Glass batt insulation as specified on floor plan. Notes: Pipes and services are not permitted to be run within cladding cavities other than passing directly through the cavity to the exterior.

WALL LININGS :
Allow for 10mm std GIB board in general unless specified otherwise. Allow for 10mm Aqua Gib board to Wet Areas (Bathroom & Ensuite).

EXTERNAL WINDOW & DOOR JOINERY :
All joinery to be double glazed Aluminum Joinery unless noted otherwise. Garage Joinery may be Single Glazed.

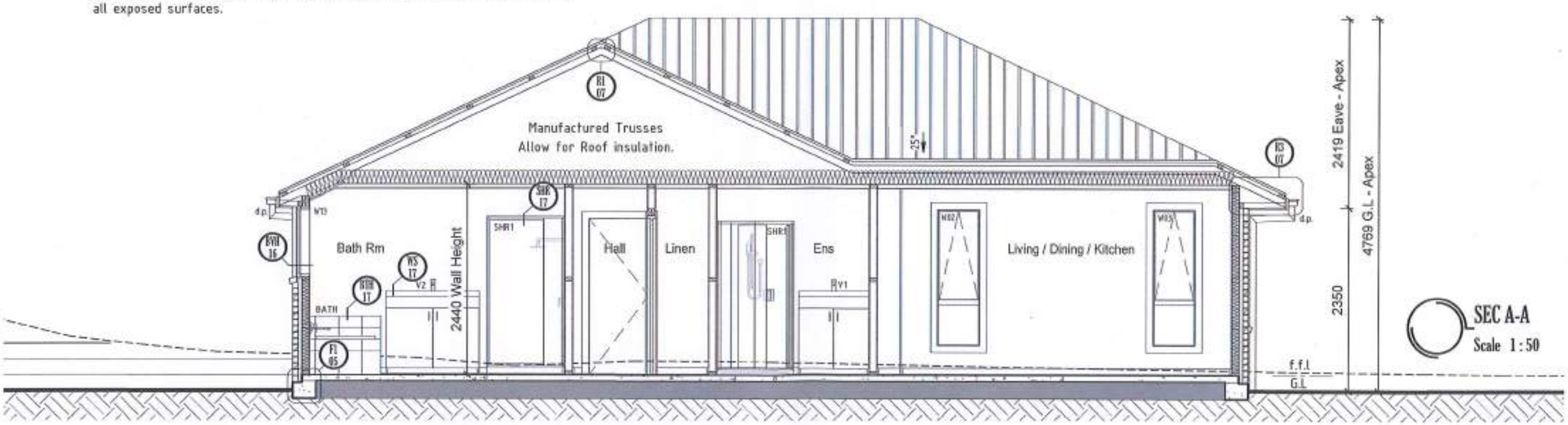

SEC A-A
Scale 1:50

TRIDENTHOMES
DUNEDIN

Project : PROPOSED NEW DWELLING for Client : Nicole & Brent Young Address : 31 Owhiro Avenue, Mosgiel	JOB # : 31_Owhiro Drawn By : LBP 113870	Drw Name : SECTION DATE : APRIL 2019	NOTE : do not scale from this drawing.	SCALE @ A3 Sht. 1 : 50	Builder. REV # B	Client. DRW # 12

3/04/2019 10:16:10 a.m.

DUNEDIN CITY COUNCIL - Approved Building Consent Document
ABA-2019-851

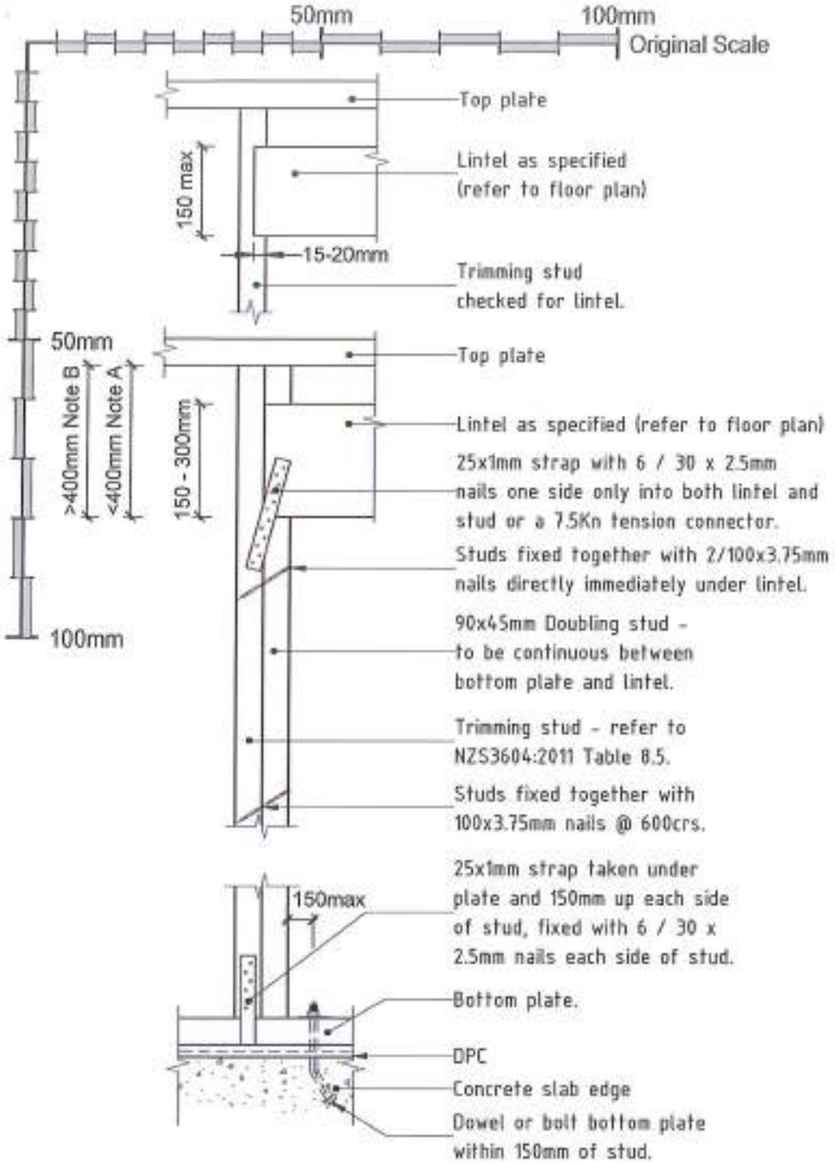

NOTE A - NZS 3604:2011 - Fig 8.5 Trimming stud thickness for lintels up to 400mm below the top plate includes the thickness of the doubling stud for trimming stud thickness.
NOTE B - NZS 3604:2011 - Fig 8.5 Trimming stud thickness for lintels more than 400mm below the top plate does not include the thickness of the doubling stud for trimming stud thickness.

ADDITIONAL NOTES -
Lintels supporting rafters or trusses of roofs shall be secured against uplift where indicated in table 8.14. NZS3604:2011. Allow for fixings for uplift as detailed or an alternative fixing of 7.5kN in tension along line of trimming stud. Refer to Project spec for Lumberlok Lintel fixing spec for alternative uplift fixings. Where fixings to resist uplift are not required fix lintel to trimming studs with 3 / 90x3.15 power driven end nails or 2 / 100x3.75mm hand driven end nails.

FIXING OF LINTELS SUPPORTING TRUSSES OR RAFTERS

Scale 1 : 10

Inline joints in top plates where the wall contains bracing elements up to 100 bracing units (BU) per meter, the top plate joint requires a minimum of a 3kN fixing. Inline joints in top plates where the wall contains bracing elements that exceed 100 BU per meter, the top plate joint requires a minimum of a 6kN fixing. Where the wall contains one or more bracing elements, use the value that is required for the top plate jointing that applies to the highest rating bracing element.

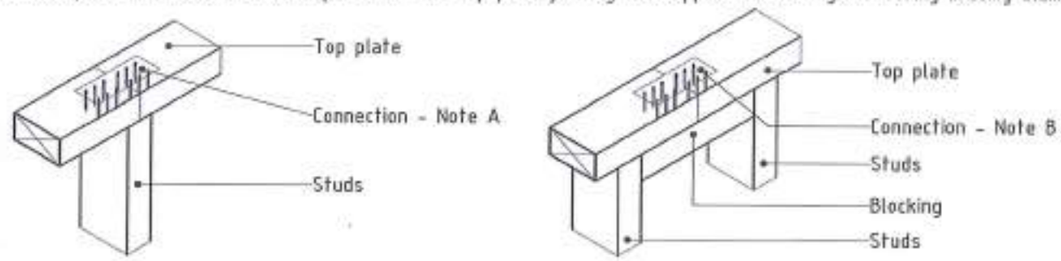

CONNECTION TOP PLATES IN LINE - WALLS CONTAINING BRACING

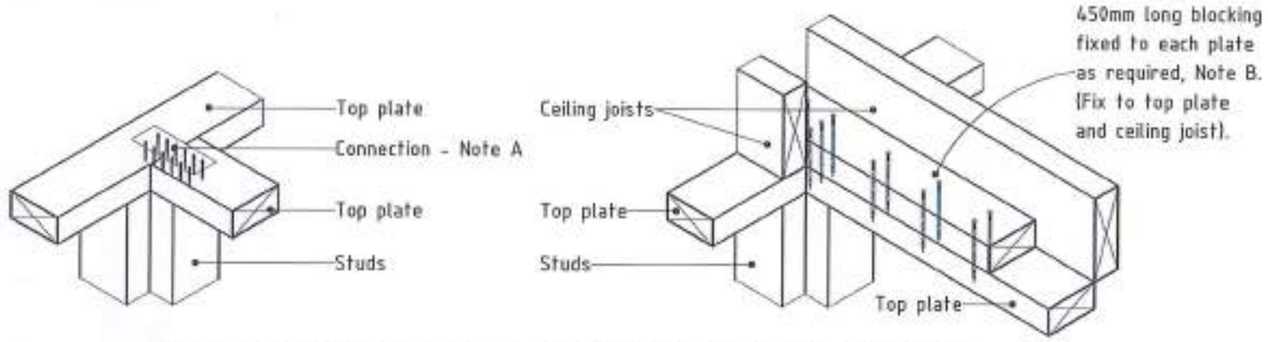

CONNECTION TOP PLATES TO EXTERNAL WALLS AT RIGHT ANGLES - WALLS CONTAINING BRACING

Walls that are at right angles to the external walls require jointing at top plates as follows.
Walls that contain bracing elements of not more than 125 BU's require at least one fixing of 6kN capacity to an external wall. Walls that contain bracing elements that exceed 125 BU and up to 250's BU require a minimum of 6kN connections to two external walls. Walls that contain bracing elements over 250 BU's require a minimum of two connections to external walls, each connection to be a minimum of 2.4 kN per 100 BU's contained in the wall. Fixings can be direct attachment or through framing members in line with wall eg. a truss bottom cord or ceiling joist.

Note A - Up to 3kN - Metal plate with 3 / 30x3.15mm nails per side.
Up to 6kN - Metal plate with 6 / 30x3.15mm nails per side

Note B - Up to 3kN - 3 / 100x3.75mm nails per side.
Up to 6kN - 6 / 100x3.75mm nails per side.

TOP PLATE FIXING FOR WALLS WITH BRACING

Scale : N.T.S

HEAD / SILL TRIMMER NOTES.

Allow for Head trimmers for openings in non load bearing walls.
Allow for Sill trimmers for openings in all walls.
Sill and Head trimmer members to be same width as the studs at the opening and at a thickness of :
45mm for spans up to 2400mm,
90mm (2/45mm members) for spans up to 3000mm,
135mm (3/45mm members) for spans up to 3600mm.

TRIDENTHOMES
DUNEDIN

Project : PROPOSED NEW DWELLING for Client : Nicole & Brent Young Address : 31 Owhiro Avenue, Mosgiel	JOB # : 31_Owhiro	Drw Name : STRUCTURE DETAILS			Builder.	Client
	Drawn By : LBP 113870	DATE : APRIL 2019	NOTE : do not scale from this drawing.	SCALE @ A3 Sht. As indicated	REV # B	DRW # 13

3/04/2019 10:18:12 a.m.

DUNEDIN CITY COUNCIL - Approved Building Consent Document
ABA-2019-851

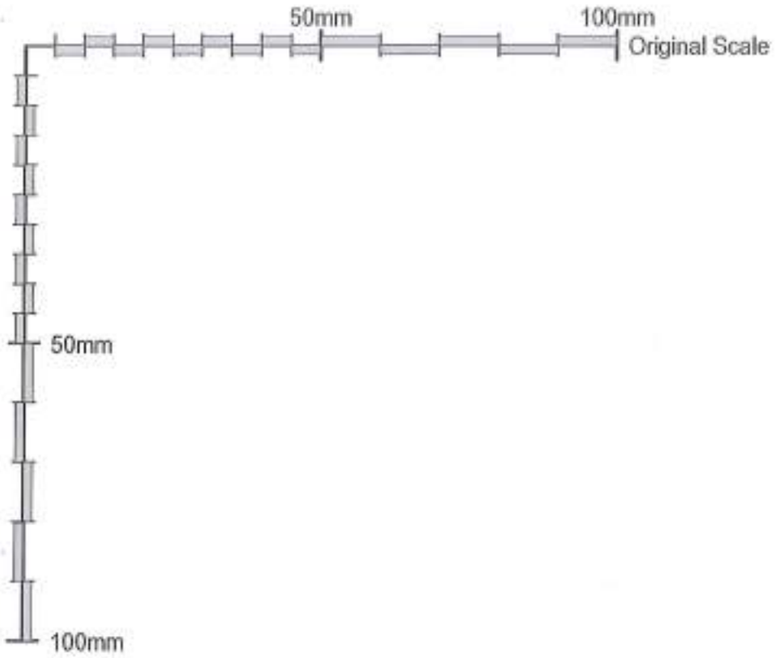

STEEL FIXING & FASTENER TREATMENT.

FIXING FASTENING.....	ENVIRONMENT.....	MATERIAL.....
Nail plates	Closed & Roof spaces	Continuously coated galvanized steel (2)
Wire dogs & bolts	Closed & Roof spaces	Hot-dipped galvanized steel (2)
All other structural fixings	Closed	Mild Steel (3)

Structural fixings, except fabricated brackets (6).	Sheltered (4)	Hot-dipped galvanized steel (2)
	Exposed.	Type 304 stainless steel (5)

(1) Items described in this table are steel fasteners required to last not less than 50 years, used for joining timber such as nail plates, bolts, brackets, wire dogs and similar, but not including nails or screws.
(2) All galvanizing weights to steel shall be as given in table 4.2 NZS3604:2011.
(3) Steel fixings in timber treated with copper-based preservatives - Refer to general spec notes.
(4) "Sheltered" shall be that above a 45° line drawn from the lower edge of a projecting weathertight structure such as a floor, roof or deck. "Exposed" shall be below that 45° line. Refer to diagram A "SHELTERED & EXPOSED DEFINITION" NZS 3604:2011 4.4.
(5) Type 304 stainless steel is sufficient to comply with NZBC requirements, but may have surface rust. Type 316 may be used where appearance is a consideration but exceeds the requirements of the NZBC.
(6) "Fabricated brackets" shall be made from 5min mild steel and shall be hot-dipped galvanized.

NAIL or SCREW TREATMENT.

Framing in "Closed" areas including roof spaces.	Mild Steel (5)
Framing in "Sheltered" areas.	Galvanized Steel (5)
Framing in "Exposed" areas.	Galvanized Steel (5)
Non - Structural cladding (15 - year durability)	Galvanized Steel

(1) Refer to NZS3604 for the definition of Closed, Sheltered & Exposed.
(2) Irrespective of the above, nails and screws shall be compatible with any fixing plate that is used with them.
(3) Where a alternative solution system is specified, durability treatment to be as specified by applicable appraisal.
(4) Galvanized nails shall be hot-dipped galvanized to a minimum of 320 g/m^2; galvanized screws shall be mechanically zinc plated in accordance with AS 3566: Part2,Class 4.
(5) Steel fixings in timber treated with copper based preservatives - Refer to NZS3604 4.4.4

G8 ARTIFICIAL LIGHT

Allow for lighting on access routes (The continuous route between the Entrance of the building to spaces within the building) with a minimum illuminance of 20 lux, refer to Table 1 G8/AS1 for the total wattage required per m^2 of floor area for Specific Luminaire Types. All electrical work to NZECP 51.

Notes:
1) Incandescent lights with a general diffusing enclosure spaced to achieve 15W/m^2 will achieve 20 lux for Corridors.
2) Downlights and other luminaires with concentrated or narrow beam distribution, require particular care with spacing, if minimum illuminance criteria are to be met.
3) Downlights to be IC-F, IC, CA-80 or CA-135 rated as specified in AS/NZS 60598.2.2. & Installed to AS/NZS 60598.2.2.
4) Allow for an external lighting fixture located to provide adequate lighting to access route at main entry / exit of dwellings.

TRIDENTHOMES
DUNEDIN

Project : PROPOSED NEW DWELLING for Client : Nicole & Brent Young Address : 31 Owhiro Avenue, Mosgiel	JOB # : 31_Owhiro Drawn By : LBP 113870	Drw Name : DURABILITY NOTES DATE : APRIL 2019	NOTE : do not scale from this drawing.	SCALE @ A3 Sht. 1 : 1	Builder. REV # B	Client. DRW # 14

3/04/2019 10:16:14 a.m.

DUNEDIN CITY COUNCIL - Approved Building Consent Document
ABA-2019-851

50mm 100mm Original Scale

50mm

100mm

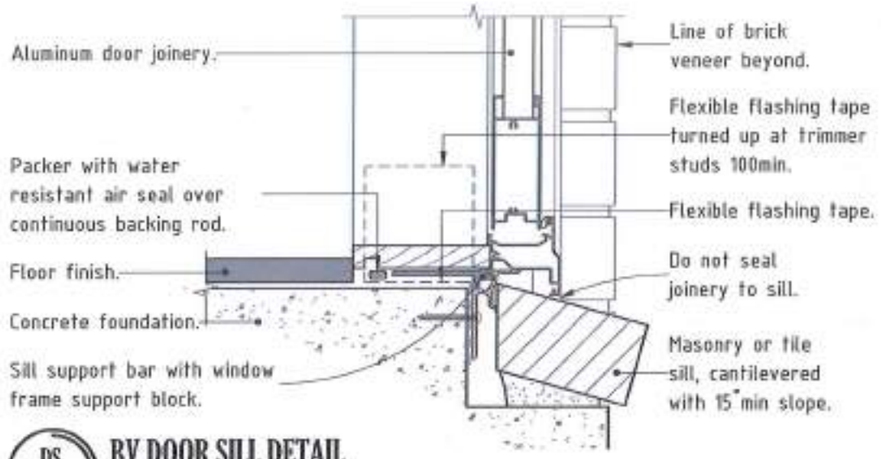

DS **BV DOOR SILL DETAIL**
Scale 1:5

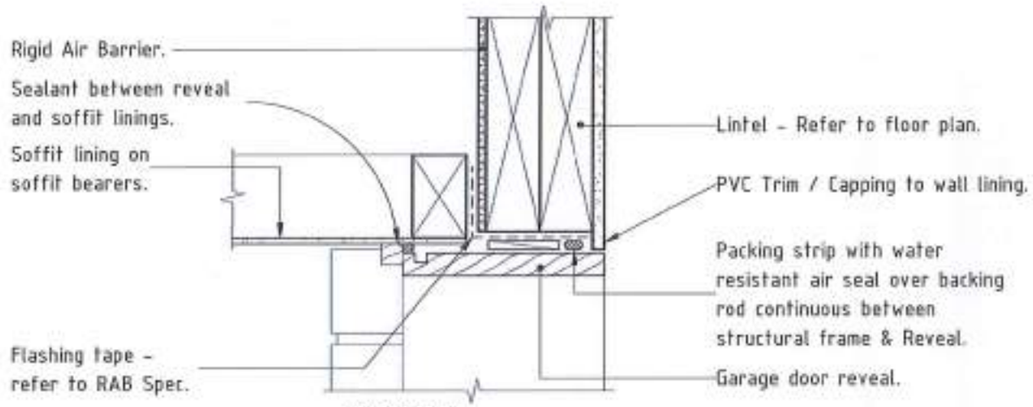

HEAD DETAIL

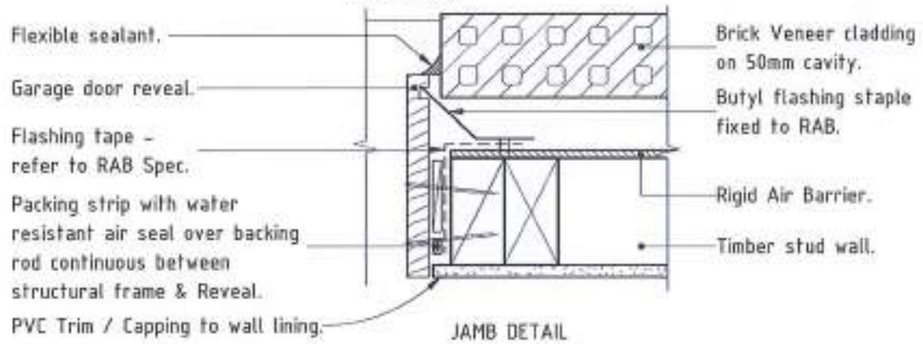

JAMB DETAIL

GD **BV GARAGE DOOR HEAD/JAMB DETAIL**
Scale 1:5

BRICK VENEER GENERAL NOTES.

Allow for a 70 Series Brick Veneer wall cladding with 50nom cavity over air barrier (permanently fixed with a 50 year durability) on timber framing as specified with nogs @ 1200crs max, install in accordance with NZBC E2/AS1. Pipes and services are not permitted to be run within the cavity other than passing directly through the cavity to the exterior. The materials and workmanship of masonry veneer shall be in accordance with SNZ HB 4236, mortar and materials to comply with NZS 4210. Mortar less than 24 hours old shall not be subject to vibration, such as would result from the nailing of interior lining's. Cavity to be drained and vented at the bottom of wall panels and above openings by open perpends 75min in height x width of the mortar joint @ 800crs, where 75min height cannot be achieved decrease perpends spacings to achieve 1000mm²/meter of wall length vents. Allow for Perpends under openings exceeding 2.4m in length at 1/3 points along opening excluding at opening ends (Cantilevered sill bricks required for water ingress protection). Allow for Vermin proofing where gaps greater than 13mm exist. Allow for Brick ties & Bricktor to very second course to junctions if veneer panel is < 230mm in length.

FLASHINGS-
Sill and head flashings to be 1.5mm Butyl rubber, 0.5mm pliable polyethylene or 2 ply asphaltic pliable waterproofing membrane. Jamb flashings to be 0.5mm pliable polyethylene or 2 ply asphaltic pliable waterproofing membrane complying with AS/NZS 2904. Allow for 150min laps for flashings. Slab rebates to have damp proofing material as detailed, damp proofing material to be 1.0mm butyl rubber or bituminous sheet, rebates lower than ground floor level may have 2 coats of bituminous liquid in lieu.

WALL TIES-
Wall ties, their spacing and embedment to be in accordance with the requirements of NZS4210 and must be screw fixed. Screw fixings to be a minimum 12 Gauge, 35mm long hex washer faced screws. Wall ties to be sized to have an embedment of at least half the width of the veneer with an end cover of 15mm from the recessed depth of the mortar joint, wall ties to be installed to allow mortar cover above and below the tie.
Placement of wall ties as outlined below,
1) Unsupported panel sides and edges of openings - Within 300mm of panel edge or side.
2) Top of veneer panels & top of panels under openings - Within 300mm or two courses (whichever is the smaller) from top of veneer.
3a) Bottom of veneer panel in masonry rebate sealed with liquid applied damp proof-course or Supported on steel angle lintel - Within 300mm or two courses (whichever is the smaller) from bottom on veneer.
3b) Bottom of veneer panel in masonry rebate with membrane damp-proof course - In each of the first two courses.
Ties to be type B Veneer ties (Manufactured to AS/NZS 2699.1) spaced @ 600crs max Horizontally and 400crs max Vertically with a Light strength for Veneers up to 180 kg/m² or medium strength capacity for Veneers up to 220 kg/m².

DURABILITY-
Wall ties and Screws - 470g/m² Galvanizing on mild steel, or 316, 316L, or 304 Stainless Steel.

TRIDENTHOMES
DUNEDIN

Project : PROPOSED NEW DWELLING for Client : Nicole & Brent Young Address : 31 Owhiro Avenue, Mosgiel	JOB # : 31_Owhiro	Drw Name : BRICK VENEER NOTES			Builder:	Client:
	Drawn By : LBP 113870	DATE : APRIL 2019	NOTE : do not scale from this drawing.	SCALE @ A3 Sht. As indicated	REV # B	DRW # 15

3/04/2019 10:16:15 a.m.

DUNEDIN CITY COUNCIL - Approved Building Consent Document
ABA-2019-851

50mm 100mm Original Scale

50mm

100mm

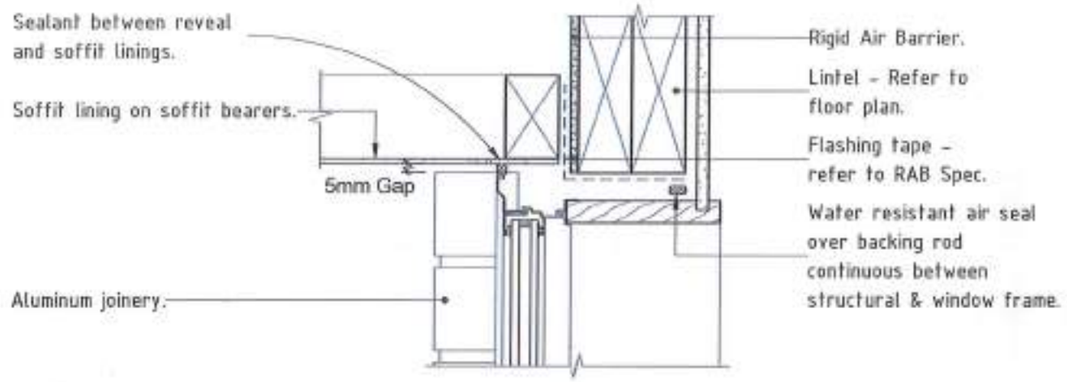

BVH WINDOW HEAD AT SOFFIT DETAIL
Scale 1:5

NOTE: Rebated Reveal indicative only and maybe replaced with Architraves.

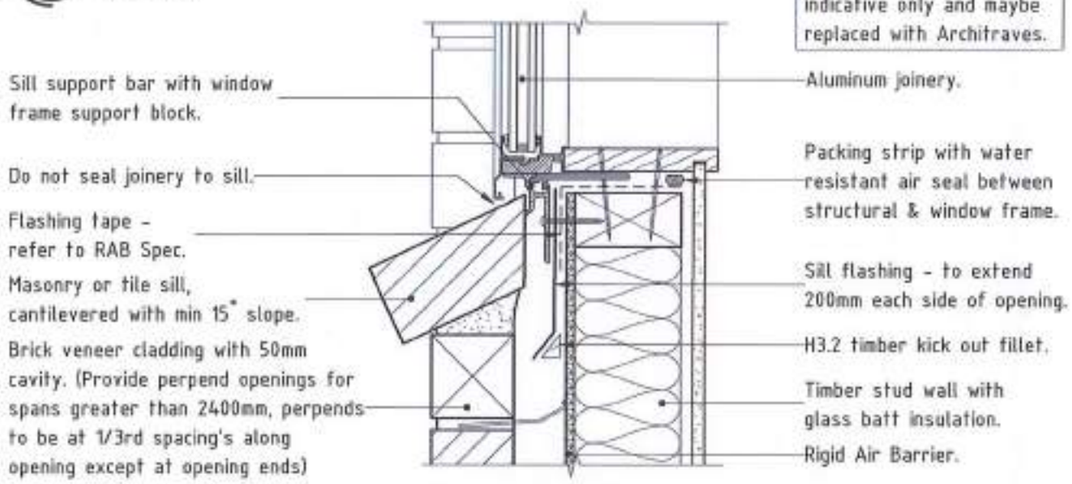

SILL DETAIL

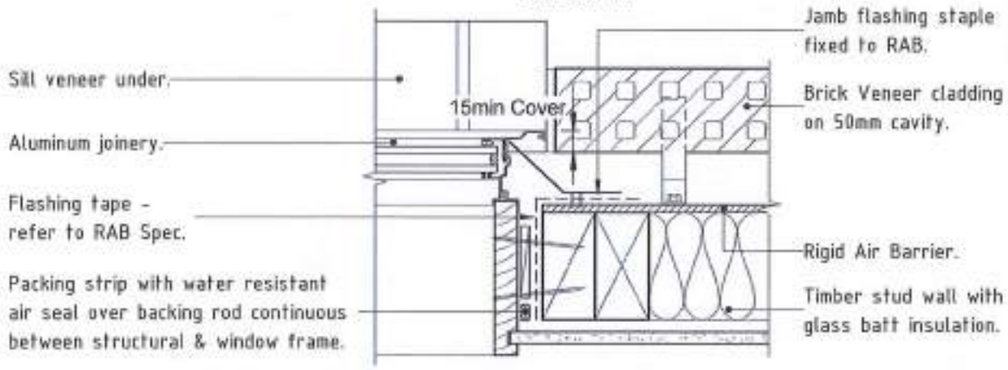

JAMB DETAIL

BVJ WINDOW FLASHING DETAIL
Scale 1:5

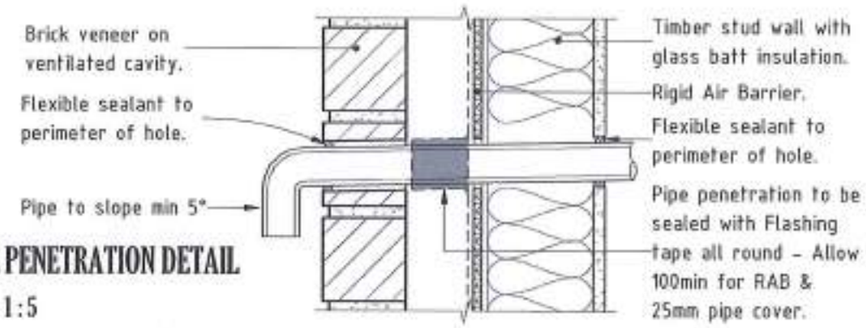

PP PIPE PENETRATION DETAIL
Scale 1:5

TRIDENTHOMES
DUNEDIN

Project : PROPOSED NEW DWELLING for Client : Nicole & Brent Young Address : 31 Owhiro Avenue, Mosgiel	JOB # : 31_Owhiro	Drw Name : BRICK VENEER DETAILS		Builder:	Client:
	Drawn By : LBP 113870	DATE : APRIL 2019	NOTE : do not scale from this drawing.	SCALE @ A3 Sht. 1 : 5	REV # B	DRW # 16

3/04/2019 10:18:17 a.m.

DUNEDIN CITY COUNCIL - Approved Building Consent Document
ABA-2019-851

50mm 100mm Original Scale

NOTES:
1) Allow for 6mm min toughened safety glazing to NZS 4223.3:2016.
2) Plumber to ensure shower waste lines up with the waste pipe.

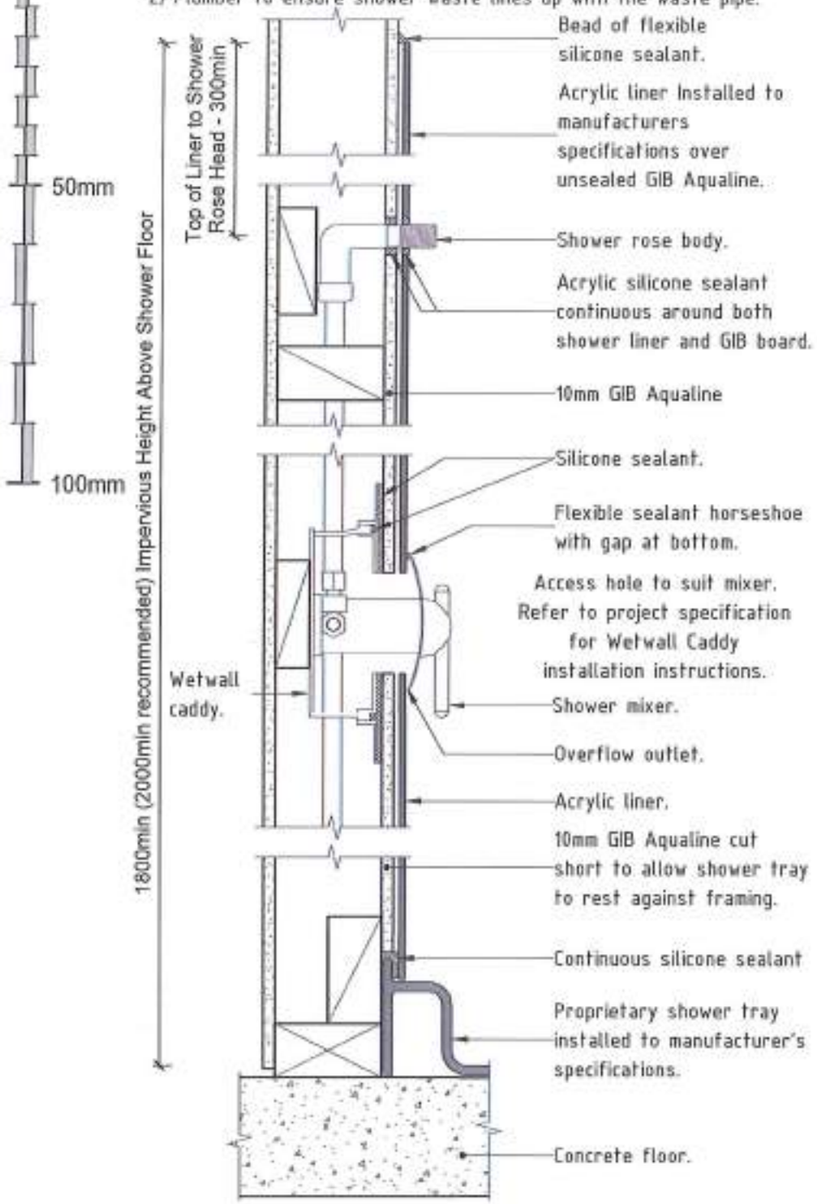

SILICONE SEALANT TO BE APPLIED AROUND PERIMETER OF SHOWER BASE WHERE IT MEETS THE FLOOR AND WALL

SHR ACRYLIC SHOWER DETAIL
Scale 1:5

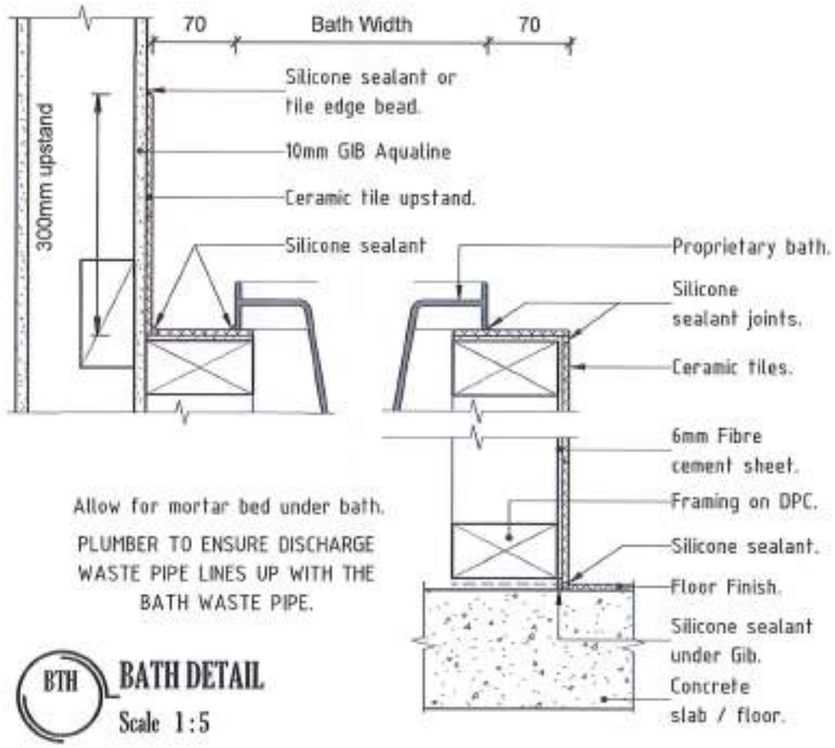

Allow for mortar bed under bath.

PLUMBER TO ENSURE DISCHARGE WASTE PIPE LINES UP WITH THE BATH WASTE PIPE.

BTH BATH DETAIL
Scale 1:5

Wall surfaces adjacent to sanitary fixtures, appliances and areas likely to be splashed or become contaminated must be impervious and easily cleaned as detailed below.

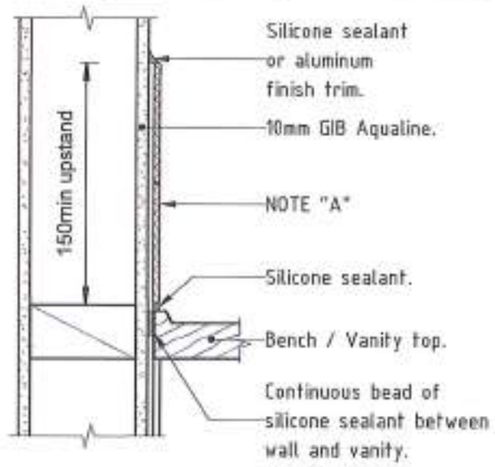

NOTE "A", Allow for an Ceramic or stone tiles having 6% max water absorption, waterproof grouted joints & bedded with an adhesive specified by the tile manufacturer as being suitable for the tiles, substrate material and the environment of use, or finish wall linings with vinyl coated wall paper, semi gloss or gloss impervious paint coating.

WS WALL SPLASH IMPERVIOUS DETAIL
Scale 1:5

TRIDENTHOMES
DUNEDIN

Project : PROPOSED NEW DWELLING for Client : Nicole & Brent Young Address : 31 Owhiro Avenue, Mosgiel	JOB # : 31_Owhiro Drawn By : LBP 113870	Drw Name : WET AREA DETAILS DATE : APRIL 2019	NOTE : do not scale from this drawing.	SCALE @ A3 Sht. 1 : 5	Builder. REV # B	Client. DRW # 17

3/04/2019 10:16:19 a.m.

DUNEDIN CITY COUNCIL - Approved Building Consent Document
ABA-2019-851

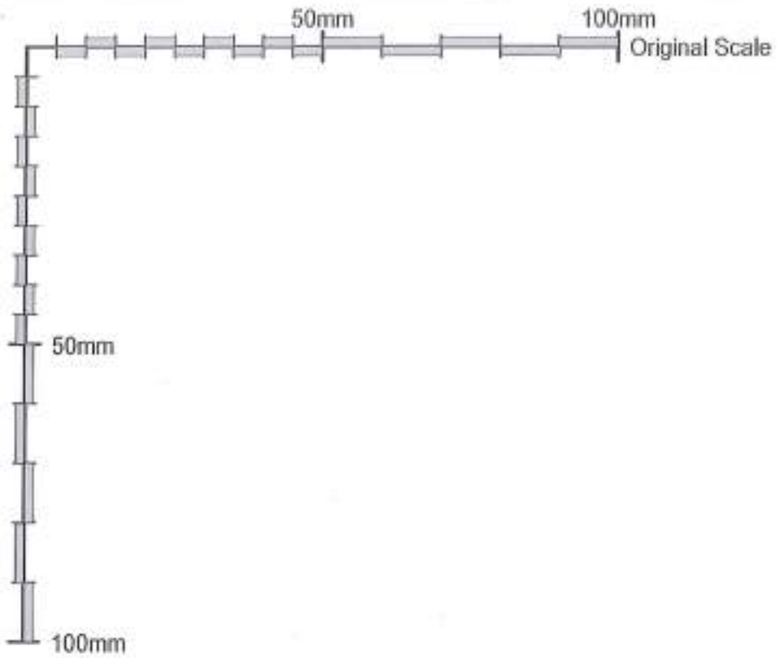

FLOOR COVERINGS KEY

No Finish.

Carpet.

Vinyl.

Refer to manufacturers information for installation.

ACCESS ROUTE SLIP RESISTANCE.

Allow for a finish to outdoor access routes ie Driveway, Decks & Paths leading to main entrance of dwelling as listed below.
NOTE: Where the surface of an access route is subject to wetting the surface shall have a cross fall of no less than 1 in 100 unless it is constructed to drain water such as timber decking. The surface of any access route shall not have a cross fall steeper than 1:50.
Allow for 190 max height from external ground level / walking surface to dwelling f.f.l. adjacent to dwelling access route.

1) Uncoated Profiled timber run adjacent to direction of travel (Allow for coated and sand/grit impregnated for stairs or sloping surfaces subject to wetting).
2) Portland Cement Concrete with a Broomed (Class 5 or 6 complying with NZS 3114), Wood float finish (Class U2), a Coated and sand/grit impregnated finish, Exposed crushed aggregate finish or Exposed rounded aggregate finish (To be tested for compliance) OR
3) Asphaltic Concrete, Marble & Granite with flamed surface, Sandstone or Concrete pavers (Test required for surfaces subject to wetting) OR
4) Other Code compliant finish to D1/AS1 2.0 Access Routes.
NOTE: Finishes above cover Sloping surfaces < 1:10 slope for wet or 1:8 for dry conditions, refer to AS 4586 Appendix F for slip classification for walking surfaces for other slopes.

FLOOR COVERINGS PLAN
Scale 1 : 100

TRIDENTHOMES
DUNEDIN

Project : PROPOSED NEW DWELLING for Client : Nicole & Brent Young Address : 31 Owhiro Avenue, Mosgiel	JOB # : 31_Owhiro	Drw Name : FLOOR COVERINGS PLAN			Builder.	Client.
	Drawn By : LBP 113870	DATE : APRIL 2019	NOTE : do not scale from this drawing.	SCALE @ A3 Sht. As indicated	REV # B	DRW # 18

3/04/2019 10:16:21 a.m.

DUNEDIN CITY COUNCIL - Approved Building Consent Document
ABA-2019-851

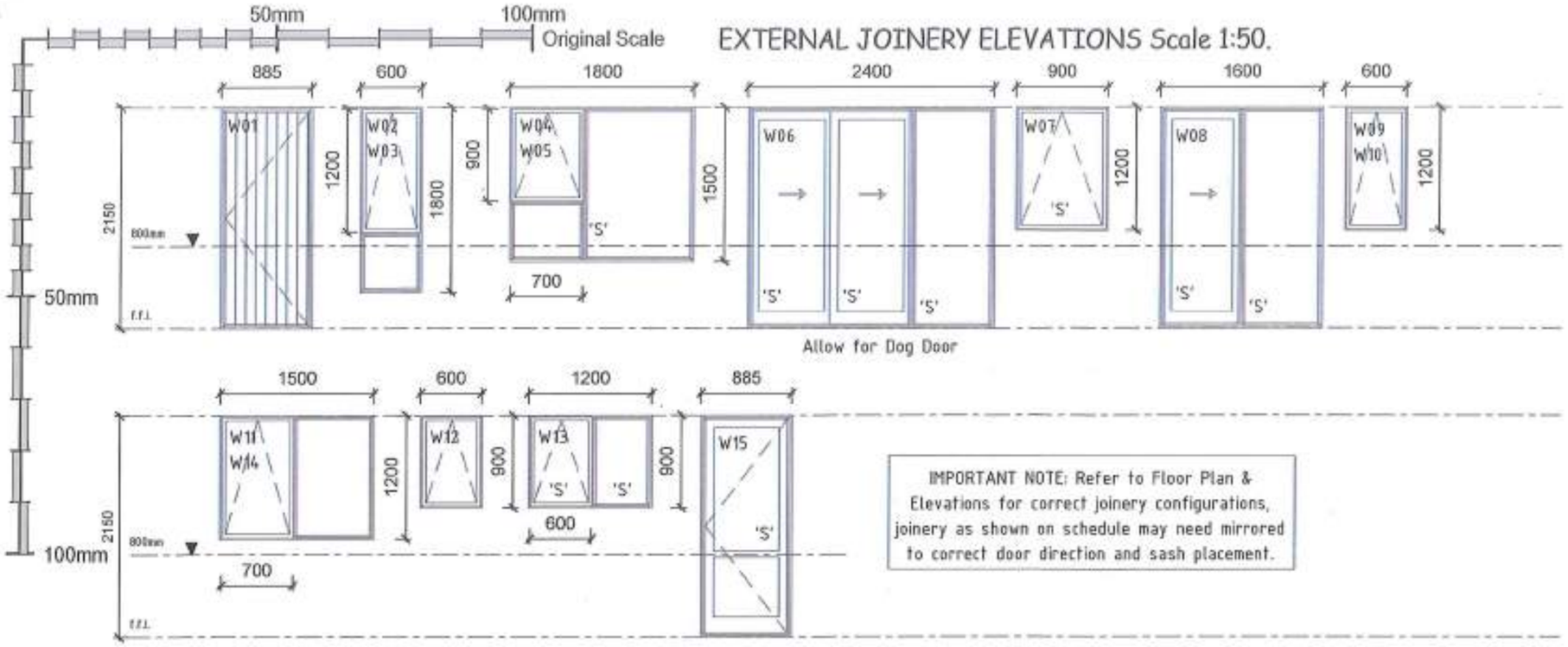

JOINERY SCHEDULE - INTERNAL

Type	Description	Overall Height	Overall Width	Panel Width	#
C-760	Cavity Slider	2000 mm	760 mm	760 mm	1
D-1220	Hinged Double Doors	2000 mm	1220 mm	610 mm	3
D-760	Hinged Single Door	2000 mm	760 mm	760 mm	9

JOINERY SCHEDULE - EXTERNAL MASTER

Mark	Model	Width	Height	Lintels	Sill Height	Head Height	Space Name	Space Area	Orientation	Glazing Area	Openable Area	-
GD		4800 mm	2150 mm	FB30M	0 mm	2150 mm	Garage	32.89 m²	N/A			
W01	0600	885 mm	2150 mm	2/140x45	0 mm	2150 mm	Living / Dining / Kitchen	53.32 m²	West	0 m²	1.67 m²	
W02	0051	600 mm	1800 mm	2/90x45	350 mm	2150 mm	Living / Dining / Kitchen	53.32 m²	West	1.08 m²	0.6 m²	
W03	0051	600 mm	1800 mm	2/90x45	350 mm	2150 mm	Living / Dining / Kitchen	53.32 m²	West	1.08 m²	0.6 m²	
W04	0045	1800 mm	1500 mm	2/140x45	650 mm	2150 mm	Living / Dining / Kitchen	53.32 m²	North	2.7 m²	0.55 m²	
W05	0045	1800 mm	1500 mm	2/140x45	650 mm	2150 mm	Living / Dining / Kitchen	53.32 m²	North	2.7 m²	0.55 m²	
W06	0170	2400 mm	2150 mm	2/240x45	0 mm	2150 mm	Living / Dining / Kitchen	53.32 m²	East	5.16 m²	3.15 m²	
W07	0032	900 mm	1200 mm	2/90x45	950 mm	2150 mm	Ens	5.04 m²	North	1.08 m²	0.92 m²	
W08	0140	1600 mm	2150 mm	2/140x45	0 mm	2150 mm	Master Bed Rm	14.56 m²	North	3.44 m²	1.51 m²	
W09	0031	600 mm	1200 mm	2/90x45	950 mm	2150 mm	Master Bed Rm	14.56 m²	East	0.72 m²	0.58 m²	
W10	0031	600 mm	1200 mm	2/90x45	950 mm	2150 mm	Master Bed Rm	14.56 m²	East	0.72 m²	0.58 m²	
W11	0034	1500 mm	1200 mm	2/90x45	950 mm	2150 mm	Bed Rm 3	11.26 m²	East	1.8 m²	0.73 m²	
W12	0021	600 mm	900 mm	2/90x45	1250 mm	2150 mm	WC	2.33 m²	South	0.54 m²	0.43 m²	
W13	0023	1200 mm	900 mm	2/140x45	1250 mm	2150 mm	Bath Rm	6.49 m²	South	1.08 m²	0.45 m²	
W14	0034	1500 mm	1200 mm	2/140x45	950 mm	2150 mm	Bed Rm 2	9.95 m²	South	1.8 m²	0.73 m²	
W15	0701	885 mm	2150 mm	2/90x45	0 mm	2150 mm	Garage	32.89 m²	N/A	1.9 m²	1.67 m²	
Grand total: 16										25.8 m²		

G7 NATURAL LIGHT COMPLIANCE

SPACE NAME	SPACE AREA	TOTAL GLAZING AREA	GLAZING % OF FLOOR AREA
Bed Rm 2	9.95 m²	1.8 m²	18%
Bed Rm 3	11.26 m²	1.8 m²	16%
Living / Dining / Kitchen	53.32 m²	12.72 m²	24%
Master Bed Rm	14.56 m²	4.88 m²	34%

JOINERY GLAZING NOTES.

All Glazing to be in accordance with NZS 4223.2&.3:2016.
Note: Glass Shelves, Fittings & Mirrors (unless hung from a hook, stand on a cabinet, fitted into a cabinet or fully adhered to a wall surface) to be safety glass.

JOINERY LEGEND :
'S' - Safety Glazing.

EXTERNAL JOINERY NOTES.

All Windows/Doors to be double glazed aluminum unless noted otherwise, joinery excluded from thermal envelope may be single glazed. External Windows and doors shall comply with the requirements of NZS 4211, all joinery dimensions to be confirmed on Site.

Air Seals shall be provided between the reveal or frame and the wrapped opening for wall openings where specified, Installed over a closed cell polyethylene foam (PEF) backing rod or similar, made of self-expanding polyurethane foam or sealant complying with:
a. Type F, Class 20LM or 25LM of ISO 11600, or
b. low modulus Type II Class A of Federal Specification TT-S-00230C.

Flexible flashing tape shall comply with NZBC, be compatible with the building wrap / roof underlay and be used only in fully concealed applications. Sill support bars to comply with BRANZ evaluation method EM6, E2/VM1 and B2/AS1.

Joinery shall be fixed using pairs of 75x3.15mm galvanized jolt head nails or 8 gauge x 65mm stainless steel screws through reveals into surrounding framing at 450max centers all round and within 150mm from reveal ends. Allow for packers between reveals and framing at all fixing points except between head reveals and lintels.

TRIDENTHOMES
DUNEDIN

Project : PROPOSED NEW DWELLING for Client : Nicole & Brent Young Address : 31 Owhiro Avenue, Mosgiel	JOB # : 31_Owhiro Drawn By : LBP 113870	Drw Name : JOINERY SCHEDULE DATE : APRIL 2019	NOTE : do not scale from this drawing.	SCALE @ A3 Sht. 1 : 50	Builder. Client. REV # B	DRW # 19

3/04/2019 10:16:24 a.m.

DUNEDIN CITY COUNCIL - Approved Building Consent Document
ABA-2019-651

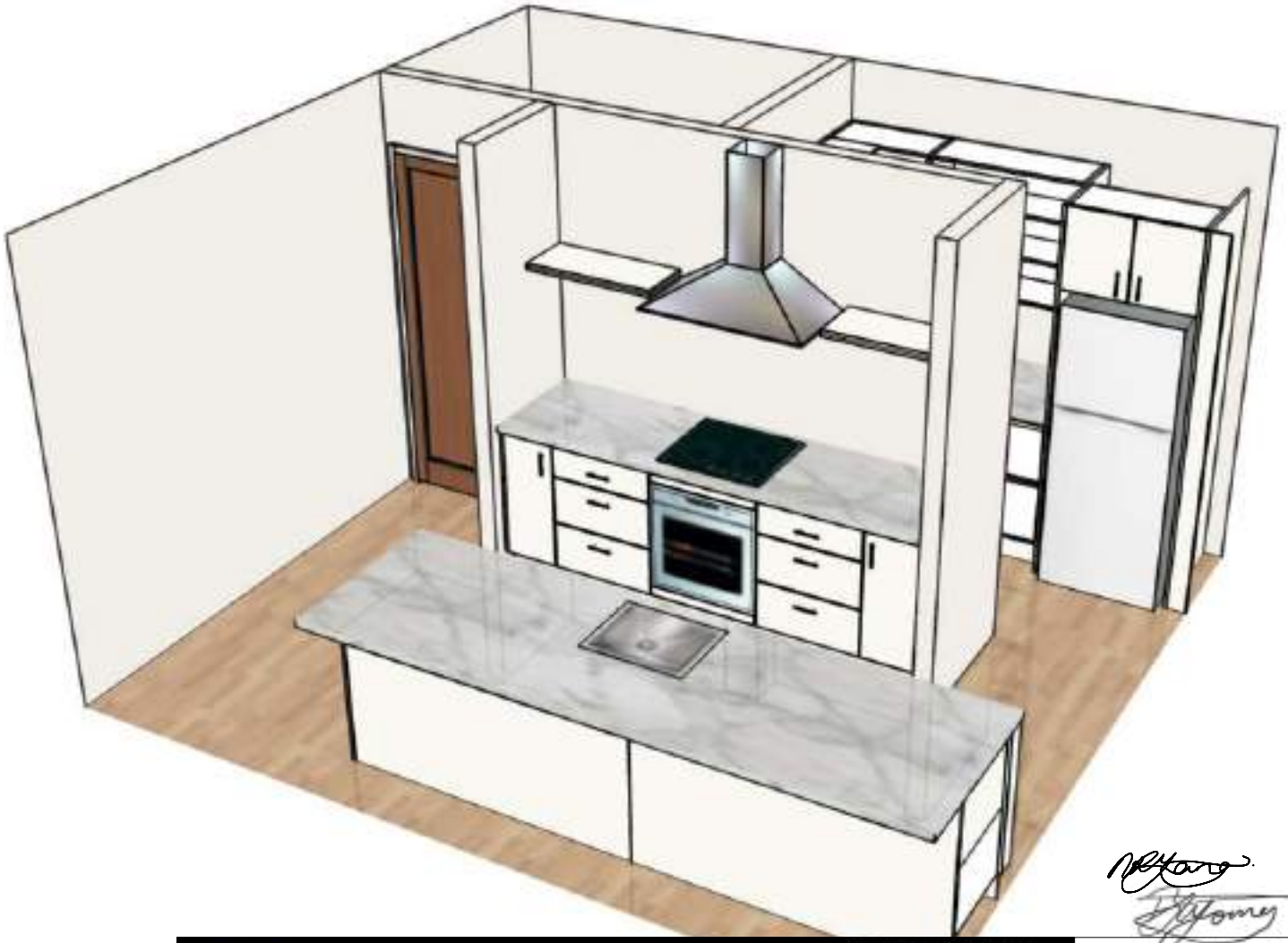

KitchenFocus

Address: 544a Kaikorai Valley Road Dunedin
Phone: (03) 486 0268
Fax: (03) 486 5208
Email: sparrow@thekitchenfocus.co.nz
Website: www.kitchenfocus.co.nz

Order #:		Date:	1/05/2019
Customer:	Trident Homes - 31 Owihro River		
Designer:			
Comment:			

designed with PRO100 - www.pro100.co.nz

DUNEDIN CITY COUNCIL - Approved Building Consent Document
ABA-2019-651

KitchenFocus

Address: 544a Kaikorai Valley Road
Dunedin
Phone: (03) 486 0268
Fax: (03) 486 5208
Email: spencer@thekitchenfocus.co.nz
Website: www.kitchenfocus.co.nz

Order #:		Date:	1/05/2019
Customer:	Trident Homes - 31 Owihro River		
Designer:			
Comment:			

designed with PRO100 - www.pro100.co.nz

DUNEDIN CITY COUNCIL - Approved Building Consent Document
ABA-2019-651

KitchenFocus

Address: 544a Kaikorai Valley Road Dunedin
Phone: (03) 486 0268
Fax: (03) 486 5208
Email: sparrow@thekitchenfocus.co.nz
Website: www.kitchenfocus.co.nz

Order #:		Date:	1/05/2019
Customer:	Trident Homes - 31 Owihro River		
Designer:			
Comment:			

designed with PRO100 - www.pro100.co.nz

Ext. Drainage

As built drainage plan
31 Owhiro River

2019-851

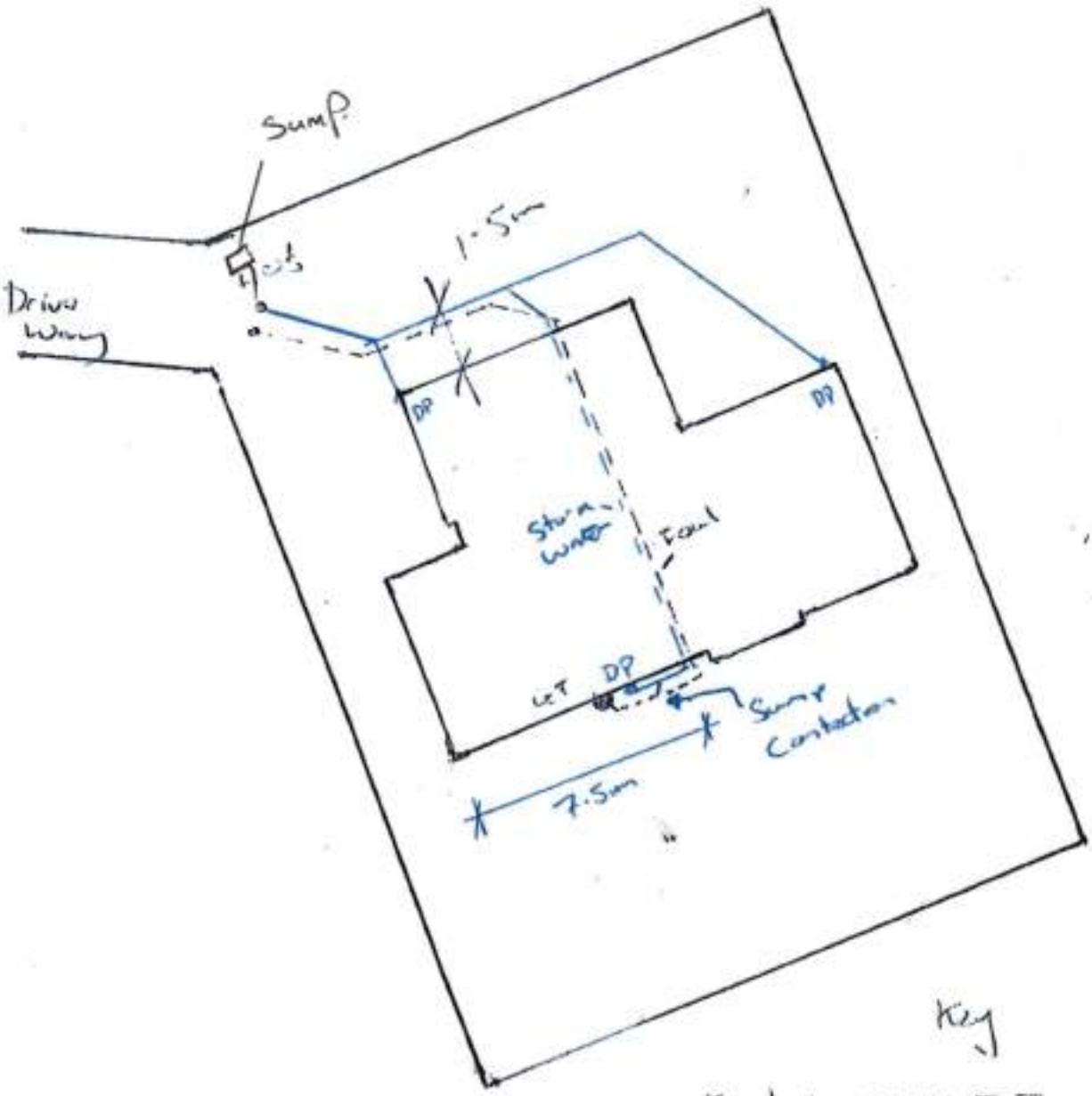

Key

Foul : - - - - -

Storm water : ———

As Built Plan
Received by: DJK.
Date: 26.11.19
ABA No: 2019-851

Under Slab Drainage

As built Slab Plan

2019-851

Original Scale

50mm

100mm

PLUMBING LEGEND

Code	Description	Model
BATH	Bath	Activita Tenalia
HWC	Hot Water Cylinder	Rheem Premiere
S	Kitchen Sink	Proprietary
SHR1	Acrylic shower	900x900mm
Tub	Laundry Tub	Proprietary
V1	Vanity	900x450mm
V2	Vanity	1200x450mm
WC	Toilet	S Trap
WM	Washing Machine	Proprietary

JOINERY SCHEDULE

Mark	Width	Height	Lintels
SD	4800 mm	2250 mm	PE989
W01	885 mm	2250 mm	2/90x45
W02	540 mm	1800 mm	2/90x45
W03	540 mm	1200 mm	2/90x45
W04	1800 mm	1500 mm	2/140x45
W05	1800 mm	1500 mm	2/140x45
W06	3600 mm	2250 mm	2/240x45
W07	900 mm	1500 mm	2/90x45
W08	1500 mm	2250 mm	2/140x45
W09	600 mm	1200 mm	2/90x45
W10	600 mm	1200 mm	2/90x45
W11	600 mm	900 mm	2/90x45
W12	1200 mm	900 mm	2/90x45
W13	1500 mm	1200 mm	2/90x45
W14	885 mm	2250 mm	2/90x45

SMOKE ALARMS:

- Smoke Alarm.

Purpose Group SH - Escape route dead ends do not exceed 20m, Open paths do not exceed 60m install Type 1 Smoke alarms with flash facility in every sleeping space, or within 3m of every sleeping space door. Smoke alarms shall be direct fixed to ceiling in accordance with AS 4514 and the manufacturers specifications.

DOWNLIGHTS -

Recessed luminaries (a complete lighting unit) to be IC-F, IC, CA-80 or CA-135 rated as specified in AS/NZS 60598.2.2. & installed to AS/NZS 60598.2.2.

ABA-2019-851

- Smoke Alarm with test & flash facility.
- Heterbox.
- Ventilation outlet diffusers.
- Ventilation intake.

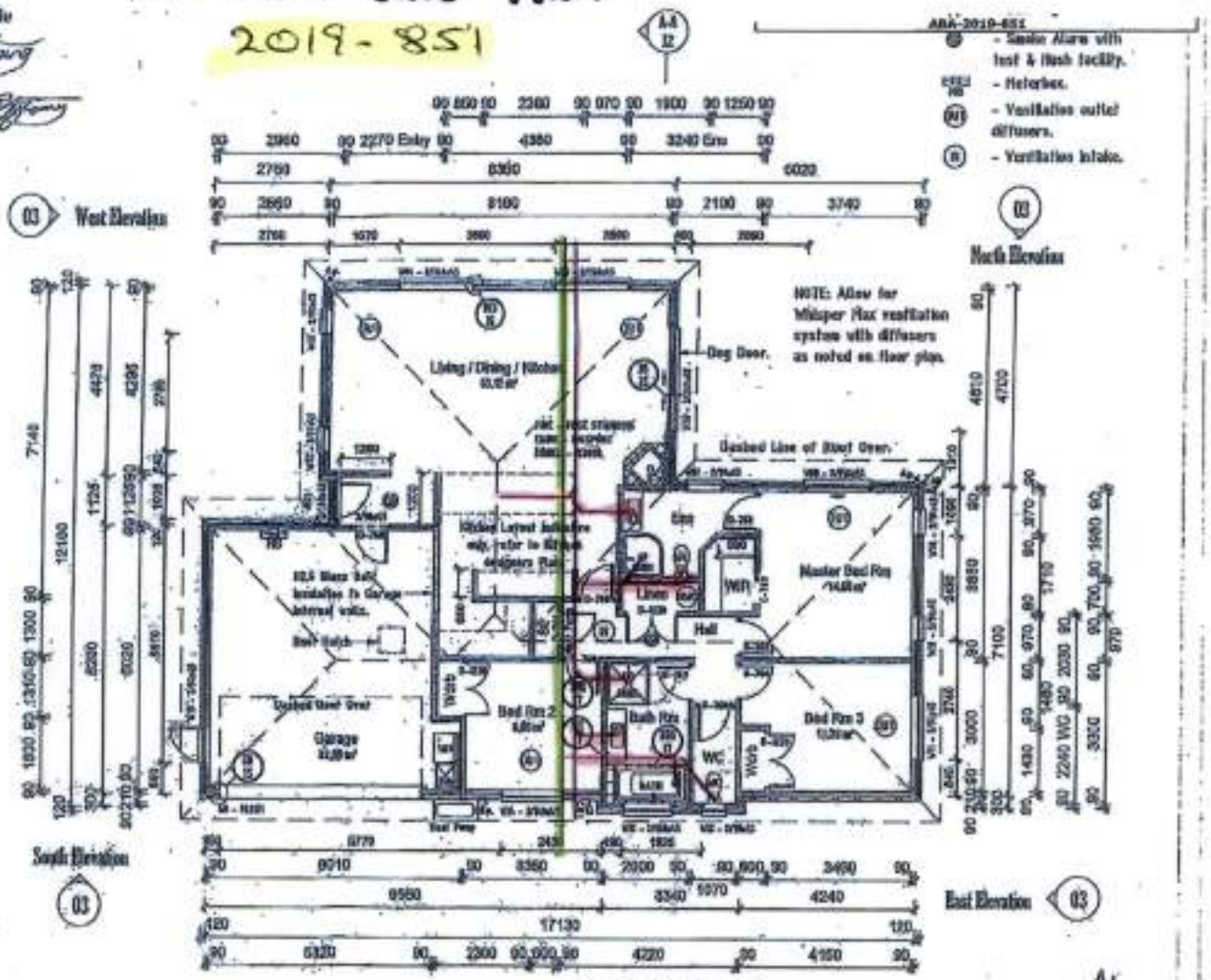

CONSTRUCTION LEGEND.

- Internal Wall.
- External Wall - Brick Veneer Cladding on 90mm cavity.

As Built Plan
Received by: DJK
Date: 26.11.19
ABA No: 2019-851

Project: PROPOSED NEW DWELLING for Client: Nicole & Brent Young Address: 41 Oxbiro Avenue, Moggill	JOB #: 31_Oxbiro Drawn by: LBP 113870	Drw Name: FLOOR PLAN DATE: MAY 2019	NOTE: do not scale from this drawing.	SCALE @ A3 Sht. As indicated	REV # C / DRW # 02

GF (G.) 6000 m²
GF (P.) 2648 m²

TRIDENTA HOME

DUNEDIN CITY COUNCIL | kaunihera a-rohe o Ōtepoti

Code Compliance Certificate Form 7

Section 95, Building Act 2004

B G Spackman and M G Wells
C/O Adams Plumbing, Drainage and Electrical Ltd
24 Townleys Road
RD1
Dunedin 9076

The building

Street address of building: 31 Owhiro Avenue Mosgiel

Legal description of land where building is located: LOT 56 DP 527844

Building Name: n/a

Location of building within site/block number: n/a

Level/unit Number: n/a

Current, lawfully established, use: Housing

Number of occupants: 2 **Year first constructed:** 2019

The owner

Name of owner: B G Spackman and M G Wells

Contact person: B G Spackman and M G Wells

Mailing address: C/O Adams Plumbing, Drainage and Electrical Ltd, 24 Townleys Road, RD1, Dunedin 9076

Street address/registered office:

Mobile: 021 178 3516 **Landline:**

Email address: liannmitten@yahoo.co.uk

First point of contact for communications with the building consent authority: As above

Building work

Building Consent Number:
ABA-2021-2868 Install 3 Sumps and 1 Submersible Pump in Driveway

This CCC also applies to the following amended consents: n/a

Issued by: Dunedin City Council

Code Compliance

The building consent authority named below is satisfied, on reasonable grounds, that-

(a) The building work complies with the building consent

Team Leader Inspections
On behalf of Dunedin City Council Date: 17 May 2022

DUNEDIN CITY COUNCIL | kaunihera a-rohe o Ōtepoti

Building Consent - ABA-2021-2868
(Section 51, Building Act 2004)
Form 5

The building

Street address of building: 31 Owhiro Avenue Mosgiel

Legal description of land where building is located: LOT 56 DP 527844

Building Name: n/a

Location of building within site/block number: n/a

Level/unit Number: n/a

The owner

Name of owner: B G Spackman and M G Wells

Contact person: B G Spackman and M G Wells

Mailing address: C/O Adams Plumbing, Drainage and Electrical Ltd, 24 Townleys Road, RD1, Dunedin 9076

Street address/registered office:

Mobile: 021 178 3516 **Landline:**

Email address: liannmitten@yahoo.co.uk

First point of contact for communications with the building consent authority: As above

Building work

The following building work is authorised by this building consent:
Install 3 Sumps and 1 Submersible Pump in Driveway.

This building consent is issued under Section 51 of the Building Act 2004. This building consent does not relieve the owner of the building (or proposed building) of any duty or responsibility under any other Act relating to or affecting the building (or proposed building).
This building consent also does not permit the construction, alteration, demolition, or removal of the building (or proposed building) if that construction, alteration, demolition, or removal would be in breach of any other Act.

This building consent is subject to the following conditions:
Agents authorised by the building consent authority for the purposes of the Building Act 2004 section 90(1) are entitled at all times during normal working hours or while building work is being done, to inspect land and buildings.

Compliance Schedule
A compliance schedule is not required for the building.

Attachments
Copies of the following documents are attached to this building consent:
Record of required site inspections - Building Act 2004 section 90(2)

Grant Sutton
Authorised Officer
On behalf of Dunedin City Council Date: 31 January 2022

2018-2019, copyright DCC/Aerial Surveys Ltd/ORC, CC BY 4.0 NZ

Legend

Water Supply

- Manifold Box
- Water Meter
- Toby
- Meter without manifold box
- Retic Flow Meter
- Combination Meter
- Manifold Box With Restrictor
- Water Valve - Zone
- Non Return Valve
- Water Valve - Gate
- Water Valve - Sluice
- Water Hydrant
- Water Backflow Preventor - RPZ
- Water Non-Return Valve
- Water Pump Station
- Water Bore
- Water Treatment Plant
- Water Storage Tank
- Supply Main
- Trunk Main
- Disused
- Reticulation
- Rider
- Scour
- Water Service Lateral
- Water Fire Service Lateral
- Water Critical Service Lateral
- Water Zone Boundary
- Water Reservoir
- Redundant Water Main

NOTE:
Private water services have the same symbols as those above, however they are coloured pink.

Foul Sewerage

- Standard Manhole
- Valve Chamber (pressurised)
- Boundary Kit
- Non-Return Valve
- Pump Station Domestic
- Drop Manhole
- Inspection Manhole
- Inspection Opening
- Lamphole
- Outlet
- Pump Station
- Treatment Plant
- Vent
- Foul Sewer Node
- Foul Drains in Common (public)
- Sewer
- Trunk Sewer
- Vent Line
- Rising Main
- Redundant Foul Sewer Pipe

NOTE:
Private foul drains have the same symbols as those above, however they are coloured orange.

Stormwater

- SW Bubble-up Tank
- SW Drop Manhole
- SW Insp Chamber and Grating Inlet
- SW Inspection Manhole
- SW Inspection Opening
- SW Lamphole
- SW Mudtank Inlet
- SW Outlet
- SW Pipe Inlet
- SW Pressure Manhole
- SW Standard Manhole
- SW Stormwater Node
- Roading Bubble-Up Tank
- Roading Mudtank
- Stormwater Main
- Stormwater Trunk Main
- DCC Open Channel
- Piped WC
- Open WC
- Culvert
- Stormwater Mudtank Pipe
- Redundant Stormwater Main
- SW Sump
- SW Pump Station

NOTE:
Private stormwater drains have the same symbols as those above, however they are coloured light green.

General

- DCC Water & Waste Structure
- Railway Centreline

Cadastral

- Parcel
- Hydro
- Strata
- Road/Rail
- Motorway Parcels
- Easment (where recorded)

Full legend can be viewed at https://www.dunedin.govt.nz/council-online/webmaps/waterservices

Council Water & Drainage Services

Information shown is the best available at the time of publishing. The accuracy and completeness of This information is variable. Private assets are typically not mapped. Recent changes may not be reflected. Verify on site before commencing work. For all enquiries phone 03 477 4000.

Scale at A3:
1:500

14/12/2021
9:59:06 AM

N

PARCEL LINES CAN VARY FROM LEGAL PARCEL BOUNDARES
This map is for illustration purposes only and is not accurate to surveying, engineering or orthophotographic standards. Every effort has been made to ensure correctness and timeliness of the information presented.

2018-2019 Urban, Copyright DCC/Aerial Surveys Ltd. Rural, ORC/Aerial Surveys Ltd. CC BY 4.0 NZ

2013 Urban and rural photography Jan/Feb 2013. Copyright DCC. CC BY 3.0 NZ.

2006/2007 Urban photography March 2007, copyright NZAM. Rural photography March 2006, copyright Terralink International Ltd.

Ext. Drainage

As built drainage plan
31 Owhiro River

COPY OF PRIVATE DRAINAGE PLAN

2019-851

DRAIN LOCATION
Position, level (or existence) of public or private drains is subject to on site verficiation by the owner of the land or their agent.

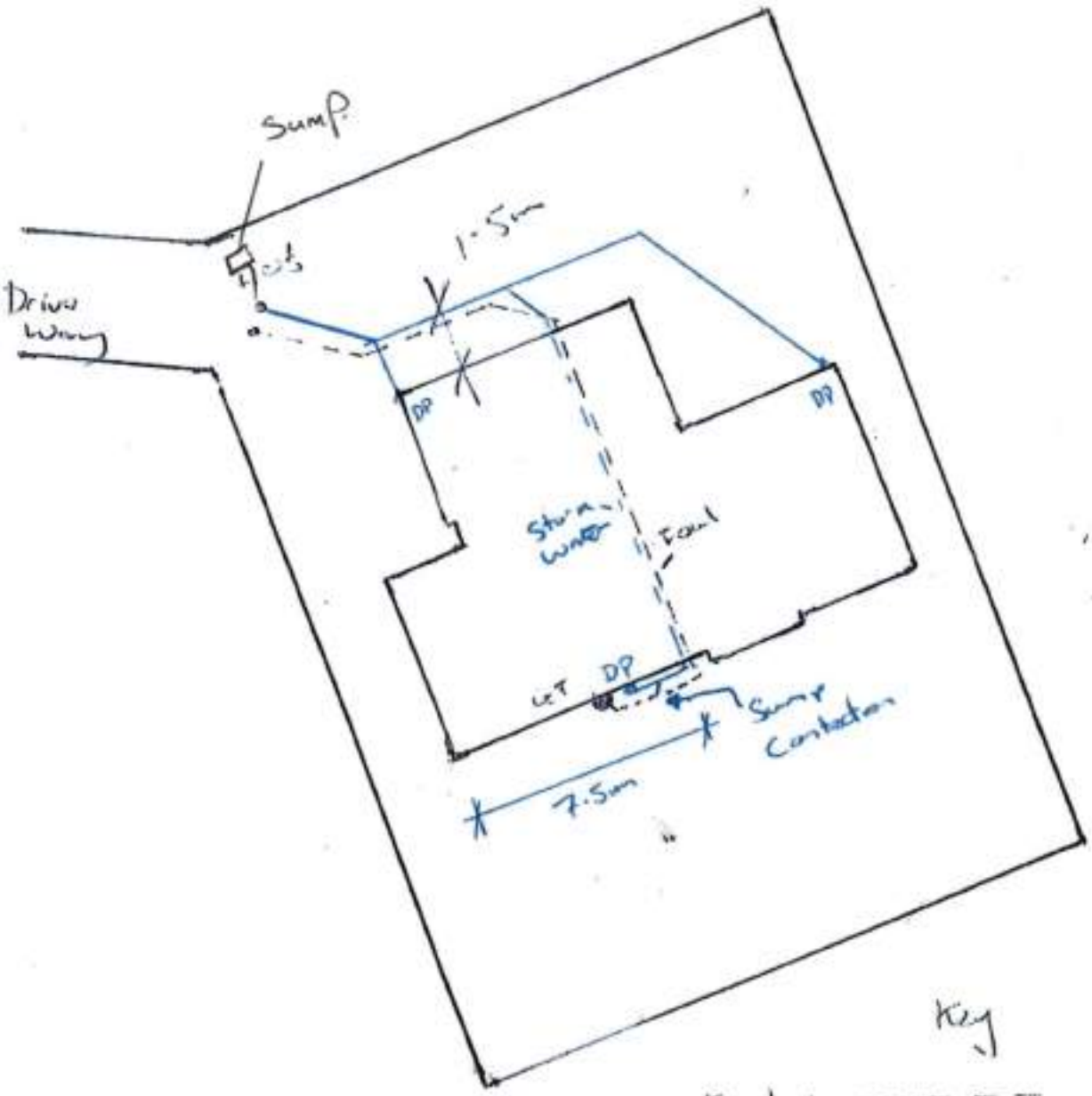

Key

Foul : - - - - - -

Storm water : ———

As Built Plan
Received by: DJK.
Date: 26.11.19
ABA No: 2019-851

Under Slab Drainage

As built Slab Plan

2019-851

Original Scale

50mm

100mm

PLUMBING LEGEND

Code	Description	Model
BATH	Bath	Activita Tenalia
HWC	Hot Water Cylinder	Rheem Premiere
S	Kitchen Sink	Proprietary
SHR1	Acrylic shower	900x900mm
Tub	Laundry Tub	Proprietary
V1	Vanity	900x450mm
V2	Vanity	1200x450mm
WC	Toilet	S Trap
WM	Washing Machine	Proprietary

JOINERY SCHEDULE

Mark	Width	Height	Lintels
SD	4800 mm	2250 mm	PE989
W01	885 mm	2250 mm	2/90x45
W02	540 mm	1800 mm	2/90x45
W03	540 mm	1200 mm	2/90x45
W04	1800 mm	1500 mm	2/140x45
W05	1800 mm	1500 mm	2/140x45
W06	3600 mm	2250 mm	2/240x45
W07	900 mm	1500 mm	2/90x45
W08	1500 mm	2250 mm	2/140x45
W09	600 mm	1200 mm	2/90x45
W10	600 mm	1200 mm	2/90x45
W11	600 mm	900 mm	2/90x45
W12	1200 mm	900 mm	2/90x45
W13	1500 mm	1200 mm	2/90x45
W14	885 mm	2250 mm	2/90x45

SMOKE ALARMS:

- Smoke Alarm.

Purpose Group SH - Escape route dead ends do not exceed 20m, Open paths do not exceed 60m install Type 1 Smoke alarms with flash facility in every sleeping space, or within 3m of every sleeping space door. Smoke alarms shall be direct fixed to ceiling in accordance with AS 4514 and the manufacturers specifications.

DOWNLIGHTS -

Recessed luminaries (a complete lighting unit) to be IC-F, IC, CA-80 or CA-135 rated as specified in AS/NZS 60598.2.2. & installed to AS/NZS 60598.2.2.

ABA-2019-851

- Smoke Alarm with test & flash facility.
- Heterbox.
- Ventilation outlet diffusers.
- Ventilation intake.

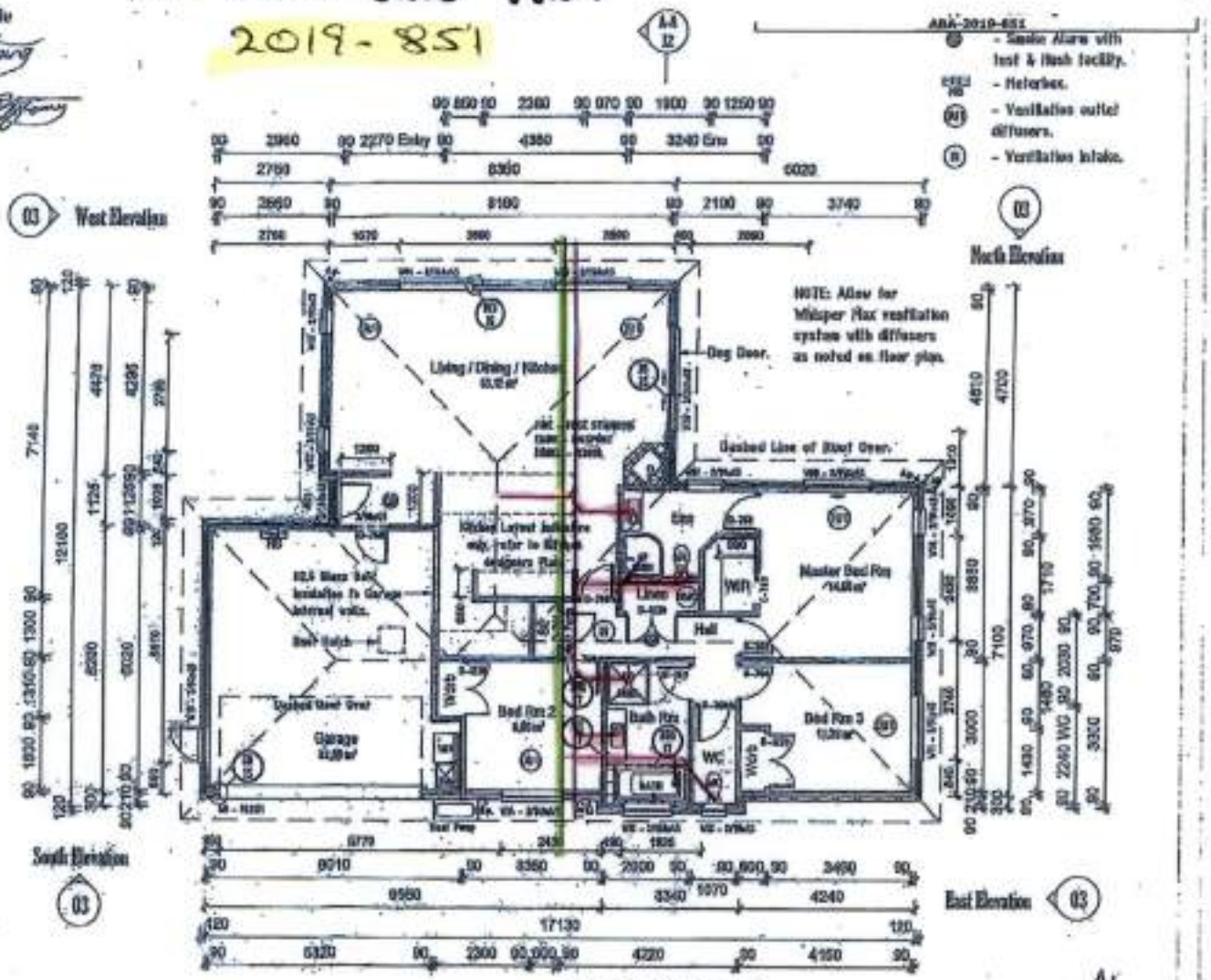

CONSTRUCTION LEGEND.

- Internal Wall.
- External Wall - Brick Veneer Cladding on 90mm cavity.

As Built Plan
Received by: DJK
Date: 26.11.19
ABA No: 2019-851

Project: PROPOSED NEW DWELLING for Client: Nicole & Brent Young Address: 41 Oxbiro Avenue, Moggill	JOB #: 31_Oxbiro Drawn by: LBP 113870	Drw Name: FLOOR PLAN DATE: MAY 2019	NOTE: do not scale from this drawing.	SCALE @ A3 Sht. As indicated	REV # C / DRW # 02

GF (G.) 6000 m²
GF (P.) 2648 m²

TRIDENTA HOME

31 OWHIRO AVE PLAN

LOT 56
DP 527844
LEGAL DESCRIPTION
28020 - 11371

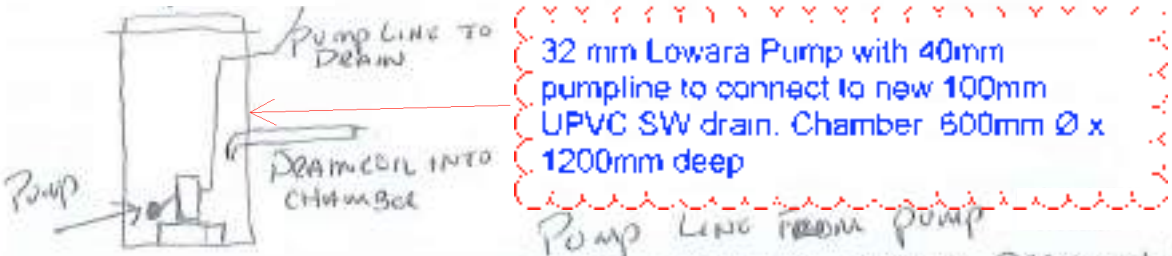

PUMP LINE FROM PUMP INTO EXTENDED STORM DRAIN IN GARDEN ABOVE GROUND

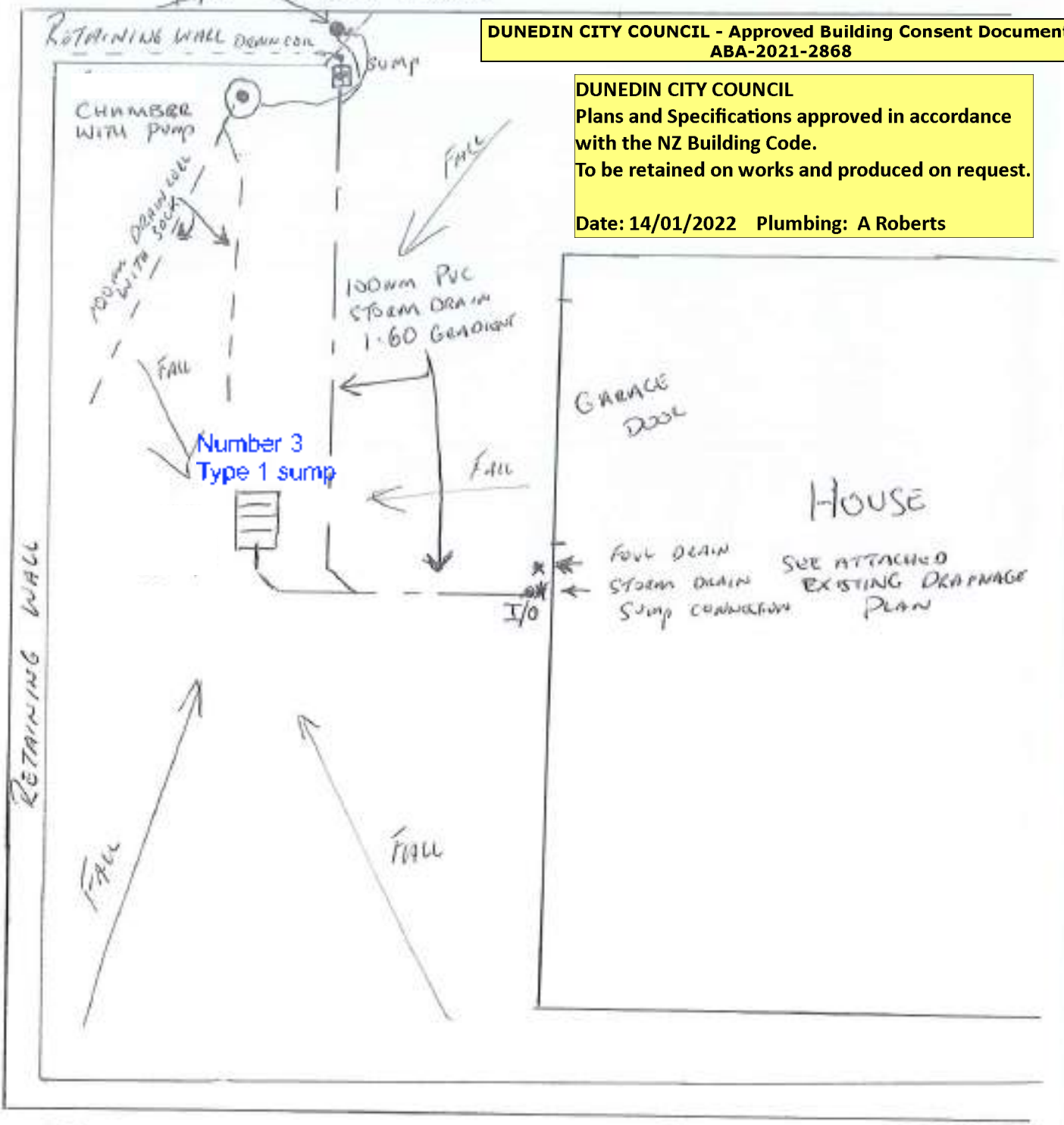

DUNEDIN CITY COUNCIL - Approved Building Consent Document ABA-2021-2868

DUNEDIN CITY COUNCIL
Plans and Specifications approved in accordance with the NZ Building Code.
To be retained on works and produced on request.

Date: 14/01/2022 Plumbing: A Roberts

SITE IS LEVEL DRIVEWAY WILL BE FORMED TO SLOPE TOWARD SUMP WHEN HARD SURFACED.

N

2

Plumbing and Drainage Specification

All work to comply with:

B2/AS1 Figure 1 and Table 1

Table 1: Durability Requirements of Nominated Building Elements (cont'd)

Building Element	Component	Situation/Function	Not less than 50 years	Not less than 15 years	Not less than 5 years
Insulation	Sub-floor		✓		
	Walls		✓		
	Ceiling or roof	Skillion roof	✓		
		Accessible ceiling or roof space	✓		
Interior wall linings		Structural linings (e.g. bracing elements)	✓		
		Shower linings (excluding behind tiled showers)		✓	
		Linings behind tiled showers	Same durability as tile covering it		
		Easy to access and replace			✓
Lintels	Steel angle (brick veneer)	All situations	✓		
	Flat steel	All situations	✓		
Plumbing and piping	Piping and fittings	Cast into concrete	✓		
		Under slabs	✓		
		Installed in a masonry cavity and not ducted or provided with maintenance access	✓		
		Concealed behind wall linings or installed in maintenance ducting		✓	
		Surface mounted and easy to replace			✓
	Valves	Concealed or moderately difficult to replace		✓	
		Surface mounted and easy to replace			✓
	Fixtures				✓
	Outlets				✓

12

Figure 1 Assessment of Durability Requirement
Paragraph 1.2.2

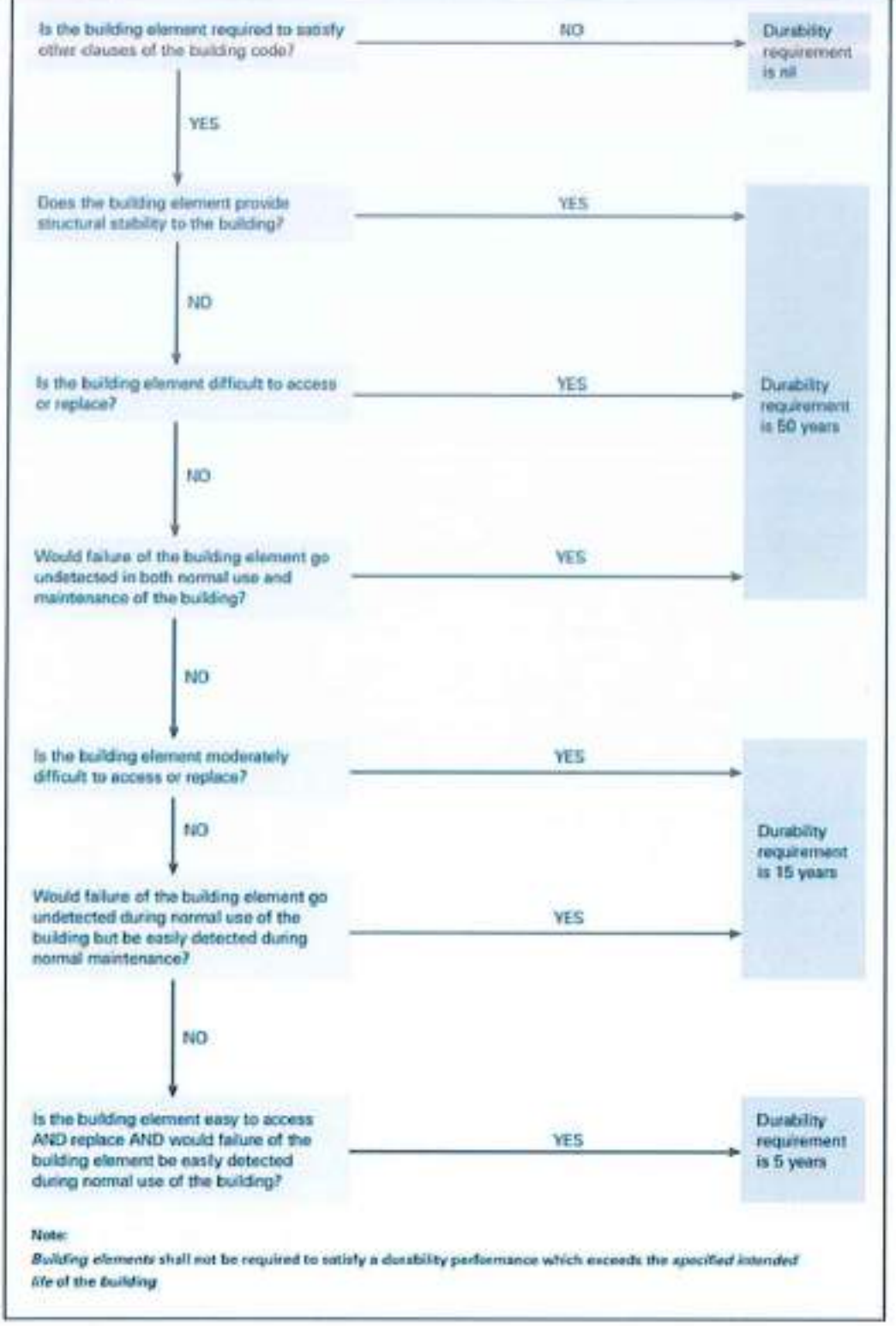

Note:
Building elements shall not be required to satisfy a durability performance which exceeds the specified intended life of the building

Sanitary Plumbing and Drainage

Installation to comply with G13/AS1, AS2 or AS 3500.2

uPVC pipe and fittings to comply with AS/NZS 1260, NZS 7649

Installation standard NZS 7643

Stormwater Drainage

Installation to comply with E1/AS1

uPVC pipe and fittings to comply with AS/NZS 1260, NZS 7649

Installation standard NZS 7643

Figure 9 Inspection points
Paragraph 5.7.3

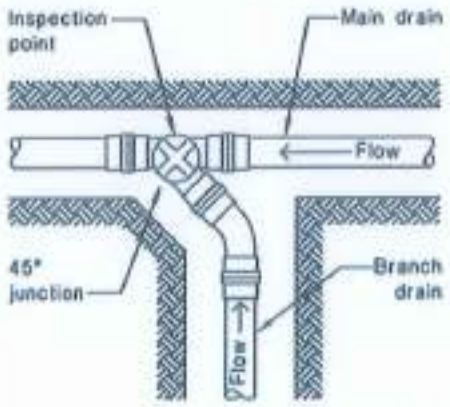

Figure 8 Relationship of pipe trench to building foundation
Paragraph 5.6.1

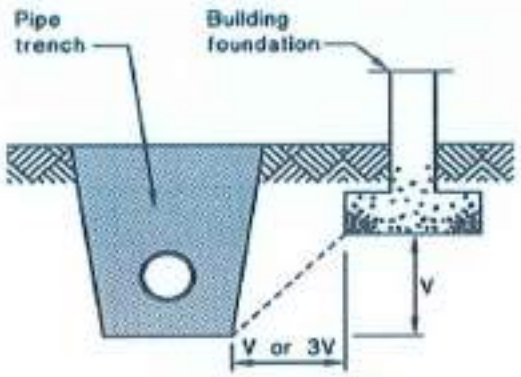

Minimum horizontal seperation shall be V or 3V dependant on length of time trench open, see Paragraph 5.6.1

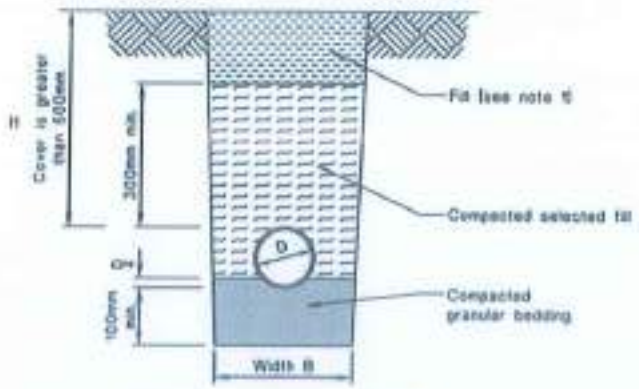

(a) Bedding type 'B' of NZS 7643
Cover greater than 500mm

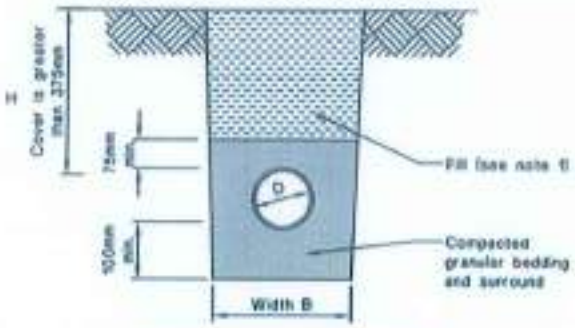

(b) Bedding type 'D' of NZS 7643
Cover greater than 375mm

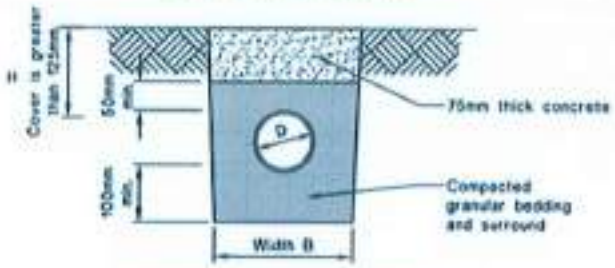

(c) Cover between 125mm and 375mm

NOTE:
1 Fill shall be
-Ordinary fill where drains are located below gardens and open country.
-Compacted selected fill where the drains are located below residential driveways and similar areas subject to light traffic.

Table 2: Drain discharge unit loading and minimum gradients
Paragraphs 3.5.3, 3.6.3 and 5.2.1

Diameter (mm)	Minimum gradient 1:20	1:40	1:60	1:80	1:100	1:120	1:140	1:160	1:180	1:200
80	215	100	61	44	34	–	–	–	–	–
100	515	255	205	149	122	104	–	–	–	–
150	2920	1790	1310	1040	855	760	677	611	558	515

See Paragraph 5.2.2 for drains laid at gradients within shaded area.

DUNEDIN CITY COUNCIL - Approved Building Consent Document
ABA-2021-2868

SUBMERSIBLE WASTEWATER

LOWARA

DOC SERIES

SUBMERSIBLE DRAINAGE PUMP

Compact, versatile and light weight. Suitable for clean and domestic water applications.

Applications

- Emptying of underground areas such as garages and cellars.
- Pumping domestic wastewater.
- Emptying water tanks and storage vessels.

Specifications

- Flow up to 230 l/m.
- Heads up to 11 m.
- Solid handling up to 20 mm with vortex impeller option.
- Built in thermal overload protection.
- Manual and automatic start. Maximum pump down level 50 mm.
- Maximum depth of submergence 5 m.
- Cable length 5 m.
- Maximum liquid temperature 40°C.
- DOC 7 has a capacity of up to 230 l/min and delivery head of up to 11 m and is suitable for 10 mm solids in suspension.
- DOC 7VX has a capacity of up to 180 l/min and 7 m maximum head delivery. It can pump liquid with solids in suspension having maximum dimensions of 20 mm.
- Versions
  Single-phase 220-240V 50 Hz 2 pole
  Three-phase 380-415V 50 Hz 2 pole

Features

- Built in capacitor.
- Thermal motor protection.
- Single-phase versions can be equipped with pre-assembled float for automatic pump operation.
- Three phase version available.

DOC PERFORMANCE CURVES AT 2850 RPM

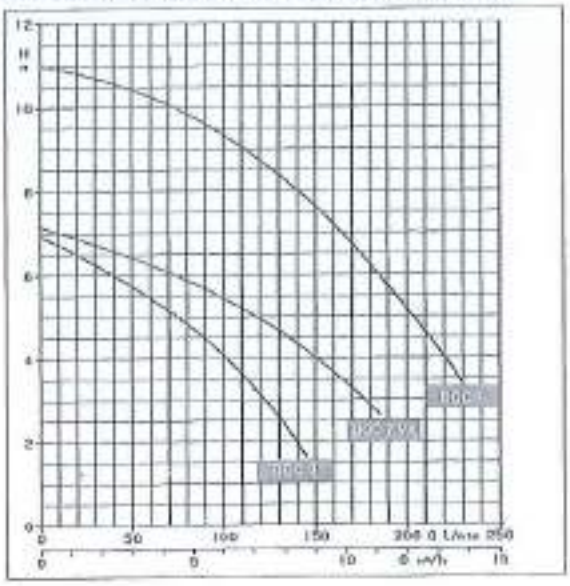

MATERIAL TABLE

COMPONENT	MATERIAL
Pump body and inlet grill	TECHNOPOLYMER
Handle and upper support	TECHNOPOLYMER
Impeller	TECHNOPOLYMER
Outer casing	STAINLESS STEEL (AISI 304)
Motor casing	STAINLESS STEEL (AISI 304)
Lower casing	STAINLESS STEEL (AISI 304)
Shaft extension	STAINLESS STEEL (AISI 304)
Screws and bolts	STAINLESS STEEL (AISI 304)
Diaphragms	NITRILE RUBBER (NBR)

Lowara
ITT Industries

4

DUNEDIN CITY COUNCIL - Approved Building Consent Document
ABA-2021-2868

DOC Series

Submersible pumps for clean and dirty water. Corrosion-resistant and compact, they are available in three versions with channel or Vortex impellers. Supplied with or without float switch. Built-in capacitor. The motor is cooled by the pumped liquid and thermal overload protection to protect the pump in case of overheating.

Specifications

Delivery: up to 14 m^3/h
Head: up to 11 m
Power supply: three-phase and single-phase 50 and 60 Hz
Power: 0.25 kW to 0.55 kW
Maximum immersion depth: 5 m
Temperature of pumped liquid: 0°C to +40°C
Liquids with suspended solids: DOC 3 and DOC 7 up to 10 mm, DOC 7VX up to 20 mm
Insulation class: B
Protection: IP68
Length of cable:
5 m (for internal use)
10 m (for external use)

Materials

Pump body: Noryl®
Suction screen: Noryl®
Handle: Noryl®
Upper support: Noryl®
Impeller: Noryl®
Outer sleeve: Stainless steel
Motor casing: Stainless steel
Lower cover: Stainless steel
Screws and tie-rods: Stainless steel
Shaft extension: Stainless steel
Elastomers: NBR

Applications

Emptying of residential sump pits, rain water tanks

Garden and lawn irrigation

Emptying of tanks or reservoirs

Emergency draining of flooded areas or rooms

Available on request: "shallow suction device" (for DOC 3 and DOC 7) assuring complete drainage of flooded floors (up to 3 mm from floor)

For a complete list of technical information, consult www.lowara.com

5

DUNEDIN CITY COUNCIL - Approved Building Consent Document
ABA-2021-2868

DOC SERIES
Operating characteristics at 50 Hz

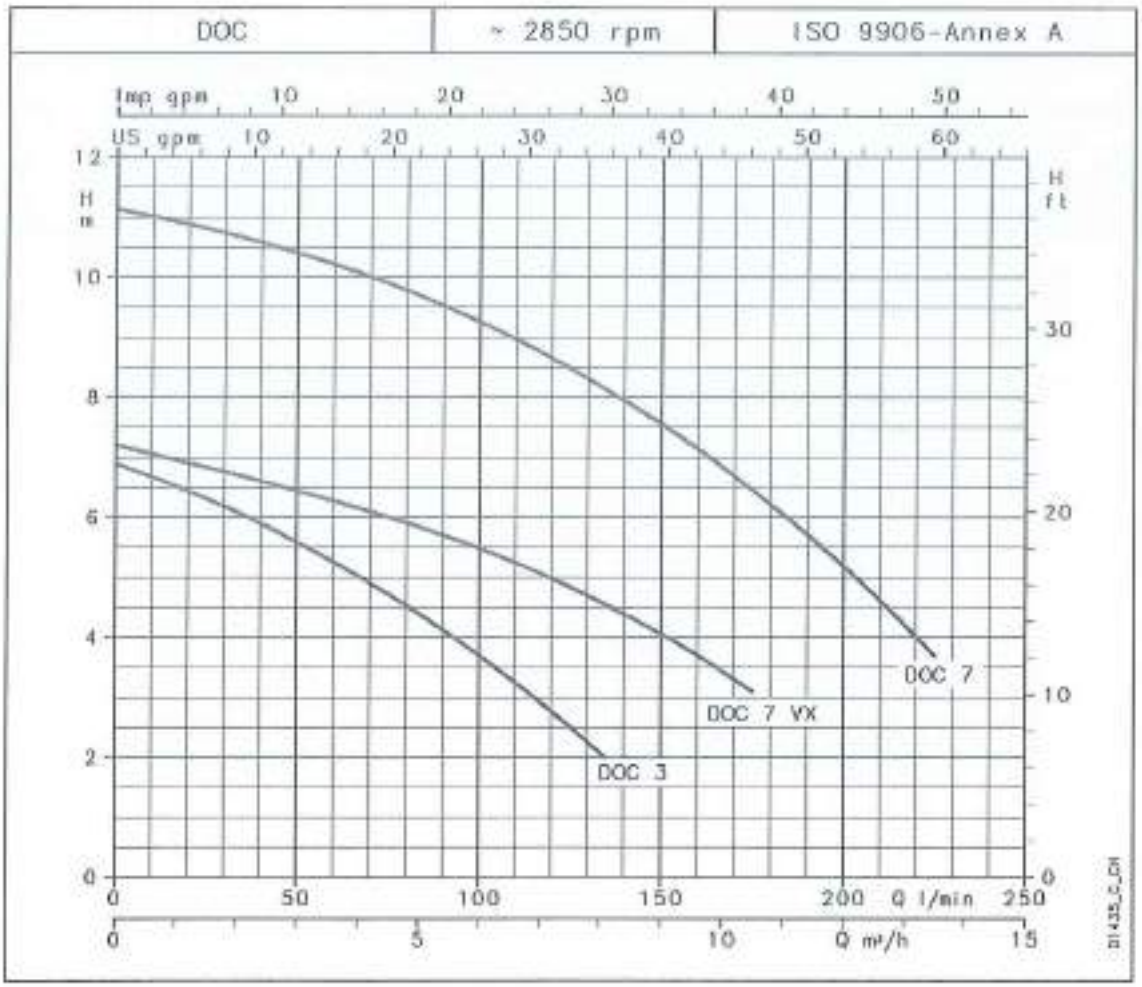

6

DUNEDIN CITY COUNCIL - Approved Building Consent Document
ABA-2021-2868

DOC SERIES
Hydraulic performance table

PUMP TYPE	RATED POWER		Q = DELIVERY								
			l/min	0	25	50	75	100	125	135	175	225
			m³/h	0	1,5	3	4,5	6	7,5	8,1	10,5	13,5
	kW	HP	H = TOTAL HEAD IN COLUMN OF WATER (METRES)									
DOC3	0,25	0,33	6,9	6,3	5,6	4,7	3,7	2,5	2,0		
DOC7(T)	0,55	0,75	11,1	10,8	10,4	9,9	9,3	8,5	8,1	6,5	3,7
DOC7VX(T)	0,55	0,75	7,2	6,8	6,4	6,0	5,5	4,8	4,5	3,1	

These performances are valid for liquids with density ρ = 1,0 kg/dm³ and kinematic viscosity ν = 1 mm²/s

doc-2p93_a_fr

Electrical data

PUMP TYPE SINGLE-PHASE	INPUT POWER* kW	INPUT CURRENT* 220-240 V A	CAPACITOR µF / 450 V
DOC 3	0,31	1,43	6,3
DOC 7	0,78	3,47	16
DOC 7VX	0,66	2,96	16

*Maximum value in specified range

PUMP TYPE THREE-PHASE	INPUT POWER* kW	INPUT CURRENT* 220-240 V A	INPUT CURRENT* 380-415 V A
-	-	-	-
DOC 7T	0,79	2,82	1,63
DOC 7VXT	0,66	2,68	1,55

doc-2p93_a_fr

3

Black and white technical books available
see www.lowara.it

7

DUNEDIN CITY COUNCIL - Approved Building Consent Document
ABA-2021-2868

DOC SERIES
Dimensions and weights

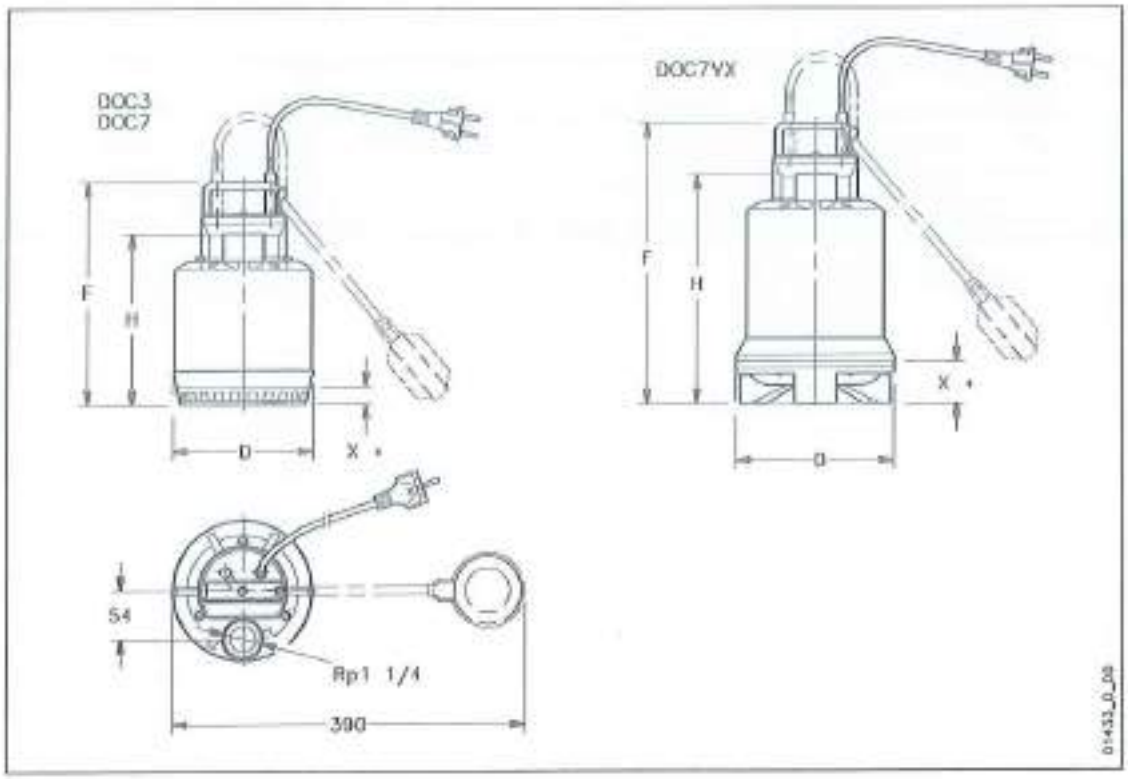

PUMP TYPE		DIMENSIONS (mm)				WEIGHT
		F	H	D	X*	kg
DOC3	DOC3 GT	245	188	155	20	4
DOC7(T)	DOC7(T) GT	285	228	155	20	6
DOC7VX(T)	-	310	252	175	45	6

* Distance from foot

doc2p50_fr_dl

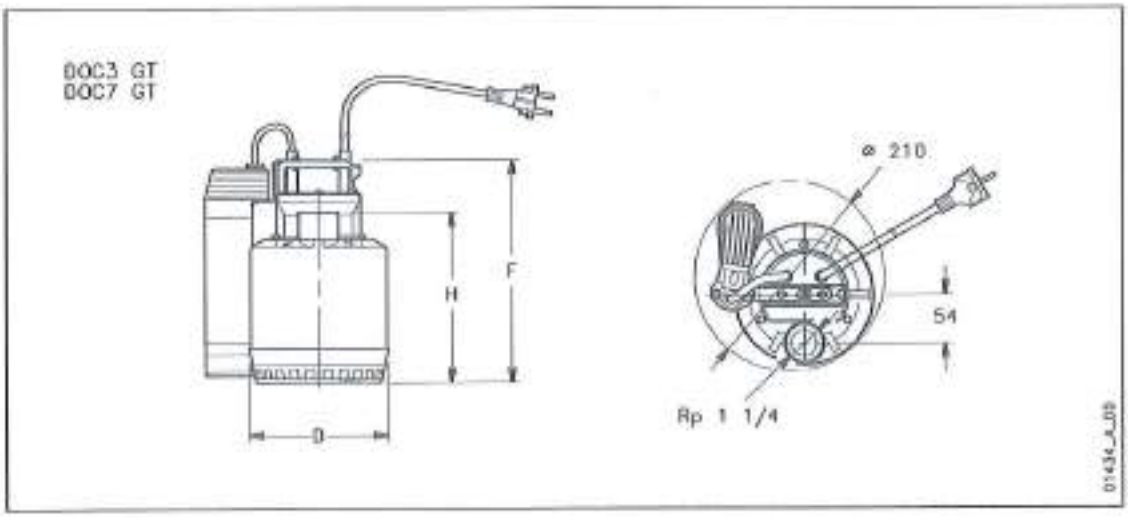

8/

DOC SERIES
Installation examples

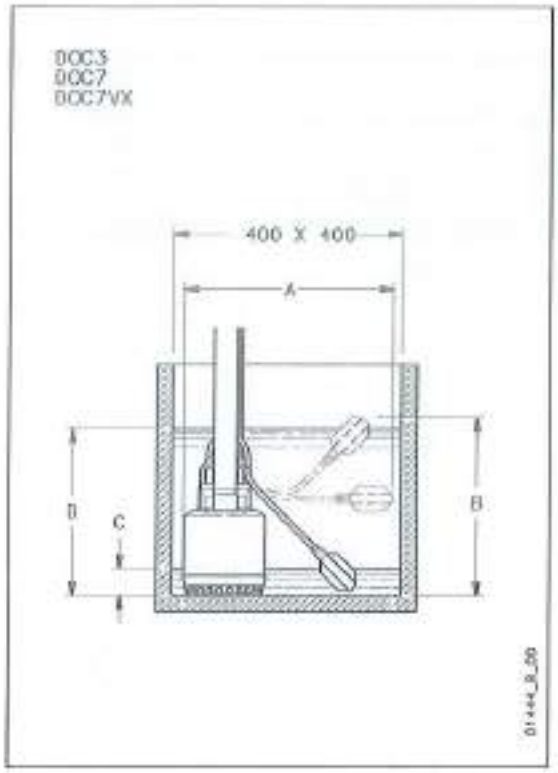

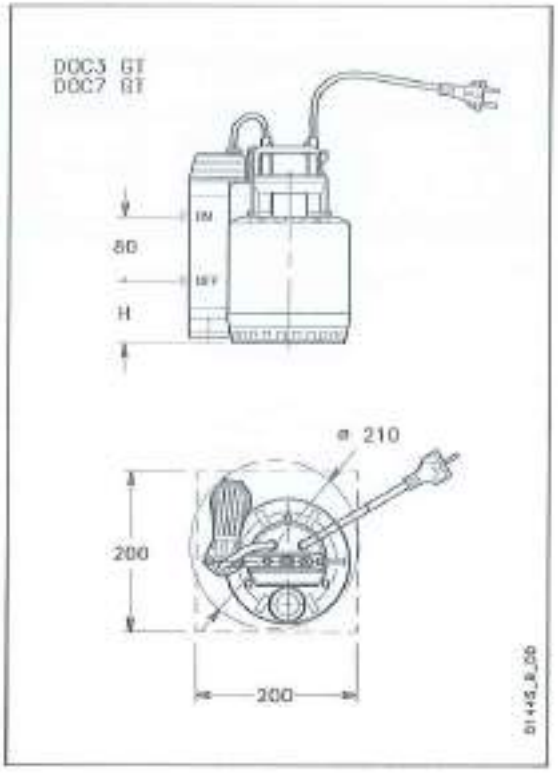

PUMP TYPE		A	B	C	D	E
DOC3	DOC3 GT	390	330	50	310	90
DOC7	DOC7 GT	390	370	90	350	90
DOC7VX	-	390	395	115	375	-

docky2p50_c_fd

Accessories

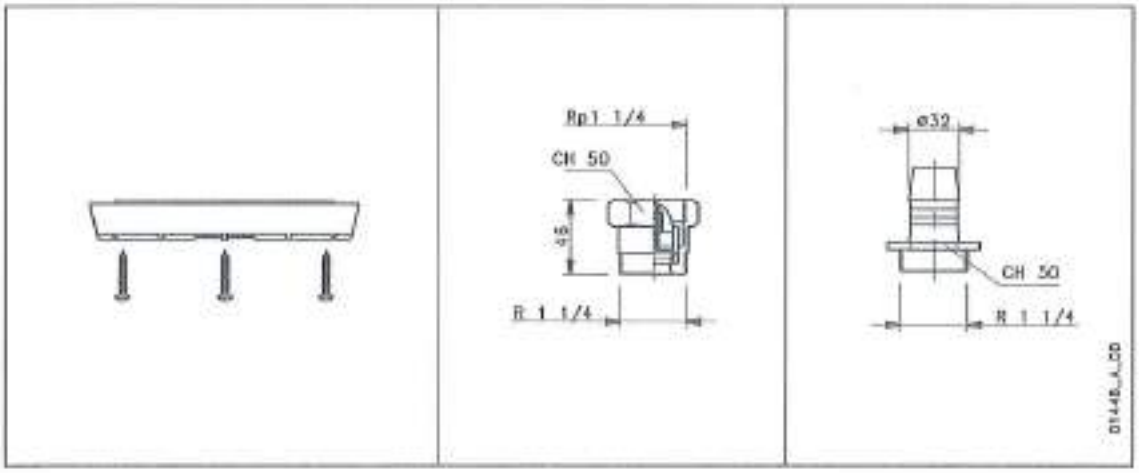

9

For all enquiries call us on
1300 137 356

Find a Rain Distributor near you.
Product Category
Search All
Product Range
Search All
Postcode or Suburb
Search

Related Products

Download Brochure | Download Installation Instructions

Series 300 Short Stormwater Pit

Product Code: 001003

Specifications

- Width: 350mm x 350mm
- Height (with grate): 325mm
- Height of riser: 260mm
- Capacity: 22L
- Colour: (product code):
  Plain Aluminium (001003)
  Terracotta Aluminium (002024)
  Sandstone Aluminium (002025)
  Galvanised Class A (002050)
  Solid Aluminium Lid (001010)
  Ductile Iron Class C (002053)
  250mm Pit Riser (001004)

< Click here to go back

Sitemap | Copyright © Rain Pty Ltd 2013.

DUNEDIN CITY COUNCIL - Approved Building Consent Document
ABA-2021-2868

PRECAST CONCRETE

Sumps, Lids & Grates

No. 3 Sump (rebate top)

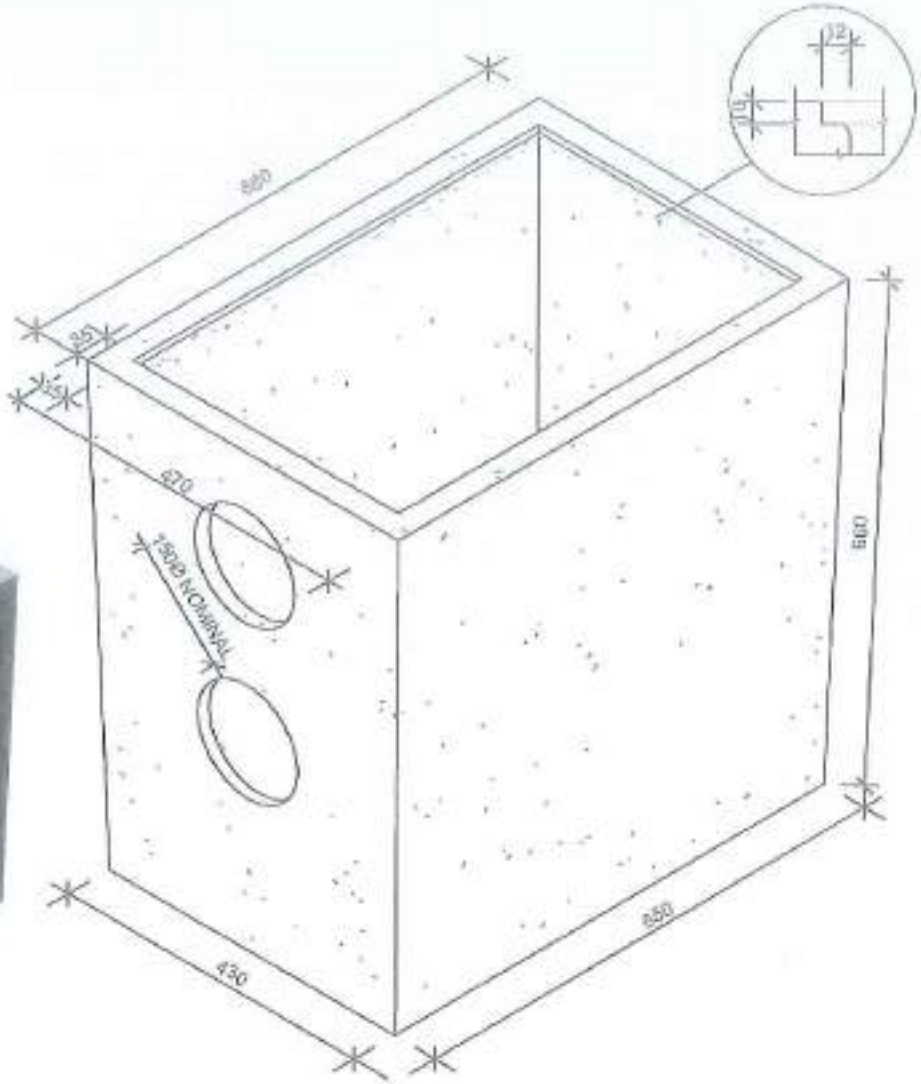

Notes:

- Fibre reinforced concrete
- Break-out holes on three sides or positioned to order
- For catchment areas up to 300m²
- Volume 110L

Extras:

- No. 3 Galvanised Barred Grate
- Sole grate ductile iron
- No. 3 Alloy lid with punched holes (6mm)
- Reinforced concrete lid

11

www.precastdunedin.co.nz

Office: (03) 477 2254
Fax: (03) 477 2214
Mobile: 0211 850 580
Email: richard@precastdunedin.co.nz

DUNEDIN CITY COUNCIL

AS-BUILT DRAINAGE PLAN

Please nominate:

- ☐ Underslab
- ☐ Foul
- ☐ Stormwater
- ☐ Effluent Disposal System

Building Consent Nº: 2021 - 1945

Site Address: 31 CHURCH AVE MOSGIEL

Plumber/Drainlayer: G ELLIOTT

Registration Nº: 19558

Please show the following items:

1. Site plan of section
2. Must include street or road names & North point
3. Drain measurements
4. Foul water drains (red ink)
5. Septic tank and effluent lines (red ink)
6. Stormwater drain – including down pipe positions (blue ink)
7. GT – Gully trap positions
8. TV – Terminal vent positions
9. IP – Inspection points
10. Falls and invert levels

Scale drawn: _____

(Plans must not be drawn in pencil)

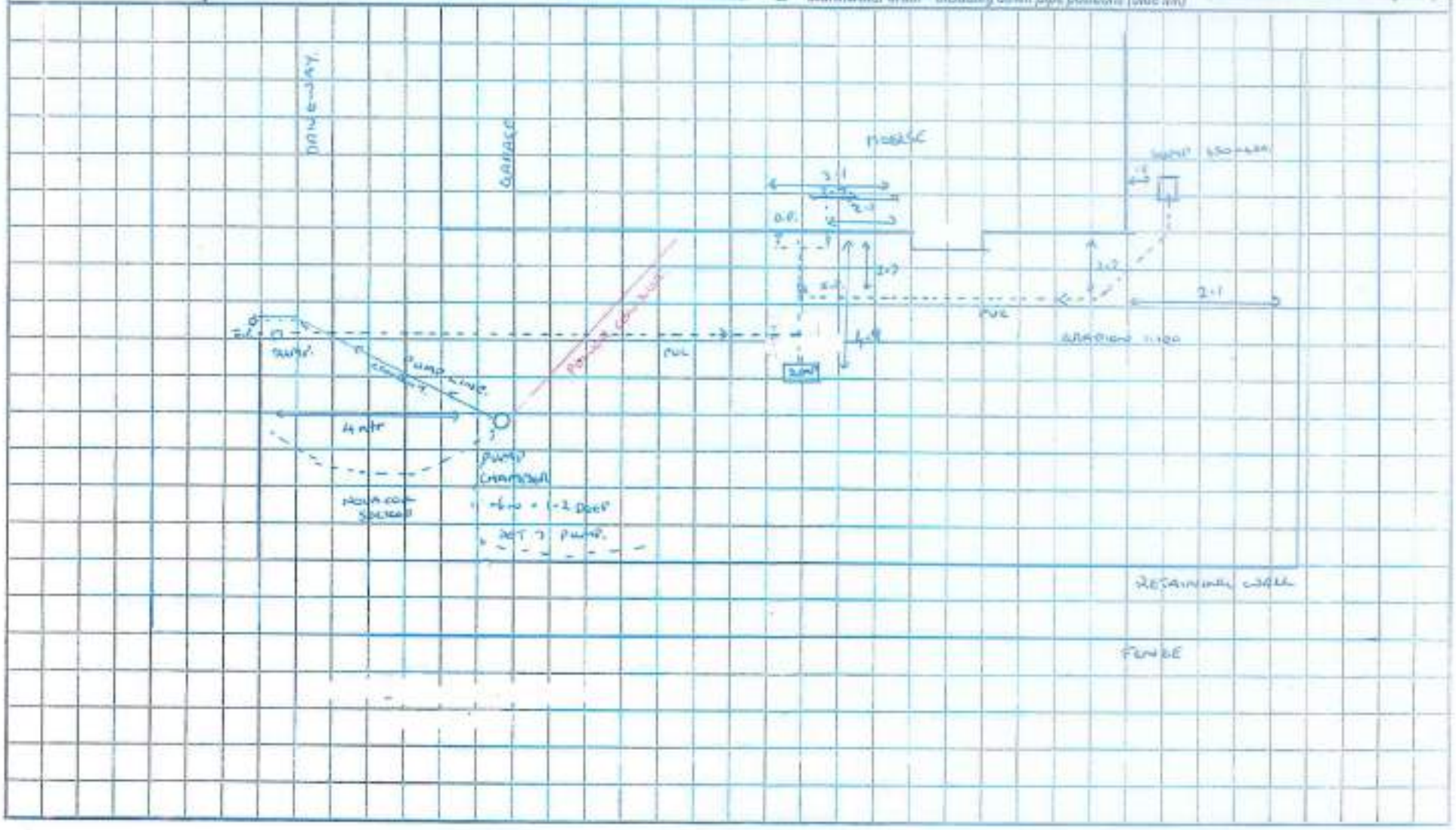

27 February 2015

Minaret Resources Limited
C/- Kurt Bowen
Paterson Pitts Group
PO Box 5933
Moray Place
Dunedin 9058

Dear Kurt

RESOURCE CONSENT APPLICATION: SUBDIVISION: SUB-2014-91
LAND USE: LUC-2014-323
67 & 67A GLADSTONE ROAD NORTH
112 HARGART ALEXANDER DRIVE
ESPLANADE RESERVE
MOSGIEL

The above applications for the subdivision of 67 and 67A Gladstone Road North, 112 Hargart Alexander Drive, and the Esplanade Reserve of Lot 2 DP 18347 (CFR OT18A/955), and land use consent for a new lot with no access or frontage to legal road, was processed on a limited notified basis in accordance with sections 95A to 95G of the Resource Management Act 1991. The Hearings Committee, comprising Councillors David Benson-Pope (Chairperson), Andrew Noone, and Lee Vandervis, heard the application in public on 28 November 2014.

At the end of the public part of the hearing, the Committee, in accordance with section 48(1) of the Act, resolved to exclude the public. The Committee undertook a site visit on 2 December 2014. The applicant then provided further information on request, which was circulated to the submitters for comment. The applicant provided a written right of reply on 12 February 2015. The Committee considered the application on 17 February 2015.

The Committee has **granted** consent to the applications on 17 February 2015. The full text of this decision commences below with a consent certificate attached to this letter.

The Hearing and Appearances

The following were in attendance:

<u>The Applicant:</u>

Kurt Bowen (Consultant Planner), Murray Frost (Director – Minaret Resources Ltd).

<u>Council Staff:</u>

Lianne Darby (Planner/ Processing Planner), Phil Marshall (Senior Planner/Advisor to Committee), Grant Fisher (Transportation), Judy Milward (Parks and Recreation Services) and Jo Tiszavari (Governance Support Officer).

Submitters

Chris Timbs (Counsel), Julie McMinn (Consultant Planner), Rod and Shona Innes, and Matt and Tina Paul.

Procedural matters

Mr Timbs advised that Mr Andy Carr (Consultant Traffic Expert) would not be attending but was available by phone should the Committee wish to speak with him.

Principal issues of contention

The following are the principal issues of contention:

- The construction of a new road at the present location of 112 Hagart-Alexander Drive to serve the proposed subdivision.

Summary of the Evidence Heard

Introduction from Processing Planner

Summarising her report, **Mrs Darby**, the Processing Planner, described the subject site and the issues with accessing 67 and 67A Gladstone Road North which was Residential 1 zoned land but was also legally landlocked. The proposed subdivision will create 82 residential lots, roading, a stormwater management lot, and a balance site, with access to be created over 112 Hargart Alexander Drive and esplanade reserve land (to become legal road) to Hagart-Alexander Drive. The subdivision proposal was a non-complying activity because not all residential lots would have frontage. Land use consent was required for the balance land as it had no frontage and would not be amalgamated with the adjoining property as part of the subdivision consent but would be held together by covenant imposed by the land use consent conditions.

The neighbours to either side of the proposed new road onto Hagart-Alexander Drive were identified as affected parties, and the application had been limited notified. Both parties had submitted in opposition, with concerns in regards the presence of a new road beside their houses, the proposed 10 year lapse period, potential damage to their houses, earthworks, the use of the reserve land, lack of traffic analysis, lack of details regarding the proposed bridge, flooding risk, the future development potential of a large block of neighbouring land, and other matters. Council departments were supportive of the proposal subject to conditions. Parks and Recreation Services had identified a process by which the esplanade reserve could be reclassified as road reserve, and were supportive of the proposal because of would provide access to both sides of the Owhiro Stream and because of the reserve enhancement works proposed.

Mrs Darby considered that the effects of the subdivision and residential development were typical for a Residential 1 zone. She advised that the Committee should confine its assessment to the effects of the new road on the neighbours. It was Mrs Darby's recommendation to grant consent as a road was not an unexpected activity in a suburban area, it would be constructed to an appropriate standard, and there would be wider spaces between the proposed road and neighbouring houses than commonly found in similar situations elsewhere.

Mrs Darby clarified that, since writing her report, she had been advised by Parks and Recreation Services that the department was wanting to keep a strip of reserve land to Hagart-Alexander Drive, meaning that the property of Mr and Mrs Paul would not abut the new legal road. It would be a simple process under the subdivision consent to transfer additional land to Mr and Mrs Innes if the parties were agreed. Either yard and driveway breaches of the District Plan would not eventuate, or could be resolved through the transfer of land.

The Applicants' Case

Mr Bowen spoke to his written submission, and provided a brief description of the proposal, the history of the site, and the efforts of the applicant to secure legal access. He gave a brief summary of the process by which Local Purposed Reserve (Esplanade) could become Local Purpose Reserve (Road), and then legal road. Mr Bowen respectfully suggested that the Committee focus on the direct effects of the proposed road on the two adjacent land owners. Mr Bowen also commented on the conclusions in the planner's report, and noted that he agreed with the planner's views and reasons but sought a number of changes to the recommended conditions of consent.

Mr Bowen addressed a number of concerns of the submitters, identifying those matters which were of limited relevance and those environmental effects which were manageable under normal processes, such as flooding. The genuine concerns of the submitters on the more direct effects of the proposed road needed to be mitigated appropriately. The applicant proposed to landscape and plant the sides of the new road to provide a natural barrier. There was already fencing in place. Mr Bowen noted that the subject sites had been zoned residential for at least 30 years, and that Hagart-Alexander Drive was a District Road. He presumed that the submitters were aware of these facts when they purchased their properties. Mr Bowen summarised his points and expressed confidence that the Committee would be able to grant consent.

In response to questions from the Committee, Mr Bowen discussed the options for pedestrian access through and beyond the subject sites. It would not conflict with the proposed subdivision, but would have implications for other property owners. The applicant had not ruled out constructing an acoustic fence along the boundaries of the submitters' properties but believed that planting, if done in consultation with the neighbours, would achieve sufficient mitigation. The submitters had genuine concerns but the proposed new road was the only option for access to the subject site which made sense. The applicant was prepared to contribute to double glazing of the bedrooms of the submitters' homes, but needed to know the costs of glazing and fencing before being able to determine if such work were financially feasible. Providing the submitters with additional land might give them extra enjoyment in their properties but the effects of the vehicles would be the same.

Mr Bowen discussed the other options for access, saying he did not believe that access through 100 Hagart-Alexander Drive was feasible. The Owhiro Stream would be crossed using a bridge or a culvert, and there were advantages for both options. Consent would likely be required from the Otago Regional Council, and the applicant would work with the Council to meet or surpass the necessary standards. The Dunedin City Council could have conditions to approve the design, and would retain control of its appearance. An underpass under the railway had not been specifically canvassed during consultation with KiwiRail, but it was desirable to have pedestrian and cycle access through to Gladstone Road North. There could be difficulty in fitting in a cycleway along Gladstone Road North, however, due to the width limitations of the existing road formation.

Submitter's Presentations

Mr Timbs spoke to his written submission on the legal aspects of the proposed subdivision proposal. He considered it 'misleading' for the applicant and planner to focus on the fact that the subject land was landlocked. There could be a road formed over Council land to the east and over private land outside the subdivision proposal. The applicant could not rely on crossing the railway line for emergency access. The submitters had concerns about the proposal which were all legitimate and within the scope of their submissions given the non-complying activity status of the subdivision. These concerns had been left unanswered.

Mr Timbs did not consider that the proposal passed the section 104D gateway test as the effects were more than minor and the proposal was contrary to the objectives and policies of the District Plan. There were future cumulative effects of the proposal as the Council sought to reserve access to the land to the east. Mr Timbs considered some proposed conditions to be *ultra vires*. He did not consider that the professional Council officers and consultants would

be able to determine the appropriate standard of technical design for their particular area of expertise based on the information given. Mr Timbs advised the Committee to decline consent under section 104(6) as there was inadequate information to determine whether or not consent should be granted. Mr Timbs tabled the written submission of **Mr Andy Carr**, Consultant Traffic Expert.

When questioned by the Committee, Mr Timbs said his clients were unable to assess the intersection design because there was no design given as part of the application. He did not know if the effects of the road could be mitigated. Council's Transportation Planner, **Mr Fisher**, noted that he had read Mr Carr's evidence and that Mr Carr had not made any statement to the effect the proposed intersection would be unsafe. It was common for a traffic engineer to make a general assessment based on their experience and expertise, and Mr Fisher could not see any issues with the proposed intersection. He asked if Mr Carr had visited the site, and was told he had not.

Ms Innes spoke to her written submission. She described the reasons why she and her husband chose their house 14 years earlier, and what the proposed new road would mean for them and their property. Ms Innes told the Committee about how she had heard of the proposed subdivision, and what consultation had gone on between them and the applicant. She did not consider the offered compensation of $5000 for double glazing to be adequate. Ms Innes requested that if the subdivision were to be granted consent, the boundary fence be removed, 3.0m of land be transferred to their property, and the fence reinstated. She also felt that the whole house should be double glazed, with costs met by the developer. Ms Innes asked the Committee to decline the application in full.

Mr Paul spoke to his written submission detailing the qualities of their property and how it was that he and his wife came to own it. They realised that there was always the possibility of residential development behind them, but they had purchased their house knowing what the street layout was like around them. They did not anticipate that the house of 112 Hagart-Alexander Drive would be removed to put in a new road. Mr Paul described the consultation with the applicant undertaken to date. He listed their concerns with the proposed road and bridge, and the effects on their property. Mr Paul also described the changes to the operation of Hagart-Alexander Drive as a result of new development down the road. Mr Paul had investigated the risks to his property and the remedial works that would possibly be needed to keep the house in good order. In conclusion, Mr Paul said he did not want the subdivision with the road access and bridge in the position proposed approved. He asked the Committee to decline consent.

Ms Paul spoke to her written submission, and described how she felt about the proposed subdivision and the approach to them by the applicant. She and her husband had worked hard for their property and she believed that they deserved to keep it as it was.

The submitter's planning consultant, **Ms McMinn**, spoke to her written submission on the planning evidence. She agreed with the Council's planner's description of the proposal and the activity status of the subdivision. Ms McMinn believed that there was a lack of information about the proposal which meant an assessment of the effects could not be adequately undertaken. She identified concerns with the lack of information regarding the layout of the proposed road, hazards affecting the subject site, earthworks, and effects on the urban landscape conservation area. Ms McMinn was of the opinion that the proposal was inconsistent with some objective and policies regarding amenity values, the urban landscape conservation area, and transportation, and contrary to those regarding hazards. She considered that the proposal did not meet either of the gateway tests of Section 104D of the Resource Management Act 1991.

Ms McMinn responded to questions from the Committee. She had no problem with conditions addressing effects, but considered there was insufficient information on the flooding hazard in the application for the applicant to 'ensure' there was no risk. The Committee sought to understand why Ms McMinn did not consider mitigation measures in her assessment. For example, an expert would need to approve a stormwater management plan before the

subdivision could proceed. Ms McMinn repeated that there was insufficient information for her clients to have confidence that safety and community well-being were being addressed. She acknowledged that she was not an expert on such matters but she could take an expert's evidence and assess it for herself.

Mr Fisher, Transportation, questioned why Ms McMinn believed the submitters' traffic expert, Mr Carr, thought the intersection would be unsafe when Mr Carr said in his evidence, *"… there is no reason to anticipate that the form of the intersection will intrinsically be 'unsafe'".* Ms McMinn noted Mr Carr was unsure where the driveway would meet the curvature of the kerb at the intersection. Mr Fisher voiced his professional opinion that the proposed intersection and driveway positions would not be unsafe.

Presentation of Council Staff

Ms Milward spoke regarding the esplanade reserve. She suggested that a portion of the access strip next to 110 Hagart-Alexander Drive should be retained as reserve, but if the new road took over the function of providing access to the watercourse, then Parks and Recreation Services were not adverse to it being incorporated as road reserve. Ms Milward requested that a 2.0m wide pedestrian access be provided at all four corners of the proposed bridge to enable access to the banks of the watercourse.

Mr Fisher noted that the intersection should be designed by the applicant, not the submitters' expert. Mr Fisher believed that the new intersection would operate safely. While the submitters had uncertainty because of the lack of design, Mr Fisher was confident that a condition could address all relevant intersection design matters. It was importation that all of Mr Carr's issues were addressed as part of the design.

Processing Planner's Review of Recommendation

Mrs Darby reviewed and maintained her recommendation to the Committee to grant consent to the proposal subject to conditions. She noted again that the land was all zoned Residential 1 where residential development should be considered acceptable. The proposed development met the Residential 1 zone rules, and the proposed road would be a typical feature of an urban area, constructed to an appropriate standard. The subject sites had been landlocked for many years, and the granting of consent would resolve this long-standing issue.

Mrs Darby advised the Committee that change was not automatically an adverse effect. The subdivision was considered to be a non-complying proposal, but only because not all the new lots had frontage to legal road; some lots were to rely on rights of way for access. This was not a fault, and the applicant could redesign the subdivision so as to avoid this situation. The submitters would not notice any change.

The level of detail of the application was consistent with other large subdivision proposals issued consent by the Council. Mrs Darby did not consider the application information deficient as the detailed design was not needed until section 224(c) certification. What did need to be known was whether the subdivision was appropriate for the land and zone. In this case, the professional staff and consultants of Council were satisfied there were no real issues with the proposal, and accordingly, the design detail could follow the issuing of consent.

Regarding the lack of detailed design for the intersection, Mrs Darby believed it was largely irrelevant. The intersection would be a standard design, and the submitters' concerns were actually a reaction to the proposed road itself. A detailed design for the intersection would make no difference to their views. If the position of the driveway to 114 Hagart-Alexander Drive was of concern, a new entrance to the site could be formed on the new boundary.

Mrs Darby explained the Council's approach to earthworks consents which were more about managing the potential effects of earthworks than deciding whether or not the earthworks should proceed. All development required earthworks. Mrs Darby advised that the earthworks

component of the process would most likely be assessed on a non-notified basis, and the submitters would not be considered affected parties to the work.

Following the close of the hearing:

The Committee undertook a site visit and determined that further information was required. A letter dated 10 December 2014 was sent to the applicant requesting a design for the intersection, information about emergency access to the subdivision, information about a possible pedestrian/cycleway access to Gladstone Road North, sound mitigation options for 110 and 114 Hagart-Alexander Drive, information on the possible purchase of the submitters' properties, information on alternative access options for the subdivision, and the volume of fill to be transported to the site.

The applicant provided the requested information in a document received at Council on 16 December 2014. This included four possible designs for the proposed intersection. The information was circulated to all parties.

Further Submissions:

Further submissions were received from **Mr and Mrs Innes,** and **Mr and Mrs Paul**, on 3 February 2015. The submitters did not consider that their concerns had been met. However, if consent were to be granted, Mr and Mrs Innes did not want an earth bund or planting next to their house, wanted approximately 3.0m of land transferred into their ownership, and a new brick and pillar fence constructed on the new boundary. Mr and Mrs Paul wanted an earth bund and planting next to their property, and a new double-sided Masada fence installed. If the fence were to be constructed on the bund, it would need to be 2.0m high, or 2.4m high if constructed elsewhere. Alternatively, approximately 2.5m of land should be transferred into their ownership and a fence matching their existing front fence constructed on the new boundary. Both submitters expected the entire construction costs, including any alterations made to the existing fences, and 50% of all on-going maintenance costs of the new fences to be met by the developer, a society, or the Council. Both submitters wanted their entire homes to be double glazed at the applicant's expense.

The submitters noted that no discussions had been made with the owner of 100 Hagart-Alexander Drive regarding the placement of the new road through their property. The submitters also believed that a new road through and beside Housing New Zealand properties would have effects that would only occur on a temporary basis while the properties were tenanted.

The submitters had significant concerns about earthworks associated with the proposed subdivision and associated vehicle movements. The submitters expected to be notified of any application for earthworks consent so that they could participate and make sure that the earthworks were managed appropriate to avoid effects. This was considered necessary as the applicant had failed to apply for all necessary consents at the one time.

The submitters' submissions were accompanied by a further report by Mr Carr, and a general report on acoustic fencing.

<u>Applicant's Right of Reply</u>

Mr Bowen responded to the comments made at the hearing and in the submitters' further submissions in a written right of reply, received at Council on 20 February 2015. He noted that the Council was faced with a large block of land-locked Residential 1 zoned land which the District Plan anticipates will be developed residentially. The applicant was of the view that the proposed access through 112 Hagart-Alexander Drive would be the most appropriate form of access, although it would change the immediate environment for the submitters. Mitigation measures had been proposed. With the proposed mitigation in place, the proposal will resolve the access issues for the land in an appropriate location and in an appropriate manner.

Mr Bowen noted that many of Mr Carr's concerns had been addressed by the detailed design of the intersection. While there was still the matter of the driveway to 114 Hagart-Alexander Drive being close to the curvature of the intersection kerb, a complying driveway could be constructed in an alternative position but only with Mr and Mrs Innes's agreement. The applicant asked the Committee to consider the proposed access through 112 Hagart-Alexander Drive only, as the applicant had eliminated other access options for reasons given in the application, at the hearing, and in the further information provided. Mr Bowen addressed other matters raised by the Committee and the further submissions. While the applicant did not oppose the transfer of land to the submitters' properties, the processes involved were not necessarily straightforward, and Mr Bowen did not offer the transfer of land as part of the proposal. The transfer of land would have no mitigation qualities.

The applicant did not support the removal of the earth bund and planting from the proposal as requested by the Innes. The acoustic fence would be attached to the outside of the existing fencing, so there would be no visual change from the submitters' houses. The costs of maintaining a fence always fell to the fence owner who benefitted from the fence, but the applicant was prepared to share maintenance costs for the fencing during the subdivision construction period only.

Mr Bowen disagreed with Ms McMinn's planning assessment, and submitted that the application was sufficiently complete and the Council's planner had correctly processed the application. The primary land use component of the proposal, being the construction of a new access road, has the potential for adverse effects which are more than minor but the proposed mitigation measures would comprehensively address the potential adverse effects.

The applicant provided evidence of an agreement with Brooklands Village which, when finalised, would address concerns about emergency access.

Statutory Provisions

In accordance with section 104 of the Resource Management Act 1991, the Planner's Report detailed in full the relevant statutory provisions and other provisions the Committee considered. Regard was given to the relevant provisions of the following chapters of the Dunedin City District Plan: 4 Sustainability, 8 Residential Zones, 13 Townscape, 17 Hazards, 18 Subdivision, and 20 Transportation.

Decision

The final consideration of the application, which took into account all information presented at the hearing, was held during the public-excluded portion of the hearing. The Committee reached the following decision after considering the application under the statutory framework of the Resource Management Act 1991.

DECISION

Subdivision SUB-2014-91

That pursuant to section 34A(1) and 104B, and after having regard to Part II matters and sections 104 and 104D of the Resource Management Act 1991, the Dunedin City Council ***grants*** *consent to a* ***non-complying*** *activity being the subdivision of 67 and 67A Gladstone Road North, Mosgiel, being the sites legally described as Part Section 4 Block II East Taieri Survey District (CFR OT258/263 Ltd – Part Cancelled) and Lot 1 DP 18347 (CFR OT9C/1038) into 82 residential lots, stormwater management lot, roading and balance land, with legal access to be obtained over 112 Hagart-Alexander Drive, legally described as Lot 23 DP 17999 (CFR OT13B/881) and Local Purpose Reserve (Esplanade), legally described as Lot 2 DP 18347 (CFR OT18A/955), subject to the conditions imposed under sections 108 and 220 of the Act, as shown on the attached certificate.*

Land Use LUC-2014-323

That pursuant to section 34A(1) and 104C and after having regard to section 104 of the Resource Management Act 1991, the Dunedin City Council ***grants*** *consent to a* ***restricted discretionary*** *activity being the creation of a new lot with no access or frontage to legal road at Lot 104 SUB-2014-91, part of 67 and 67A Gladstone Road North, Mosgiel, subject to conditions imposed under section 108 of the Act, as shown on the attached certificate.*

Reasons for this Decision

The Hearings Committee considered the evidence heard, the relevant statutory and plan provisions, the principle issues in contention and the main findings of fact. The main findings of fact have been incorporated within the reasons discussed below.

The effects of the proposal are considered to be no more than minor for the following reasons:

1. The proposal is for a subdivision to create residential sites in a residential area, and in this respect the effects of the proposal are largely anticipated by the District Plan. The new lots will all meet the minimum area requirement, so the proposed development will not breach the density provisions of the Residential 1 zone. All new lots will have adequate legal and physical access except for Lot 104 which is to be transferred to Brooklands Village and therefore is not considered to be a deficient lot. The Committee recognises that the subdivision itself is a typical development, and is not dissimilar to the numerous other subdivisions already in progress in Mosgiel. Such an activity is not usually notified.

2. The Committee is aware that the subject sites have long-standing and significant deficiencies in access which has prevented their development despite the fact the land has been zoned Residential for 35 years at least. The applicant has promoted an option for obtaining legal and physical access to the subject sites, allowing the land to be utilised as intended by the Dunedin City District Plan and the Mosgiel Borough District Scheme zonings. The proposed legal road will be dimensioned to an appropriate and compliant standard, and is expected to create a perfect crossroad with Beech Street. Council's Transportation department and the submitters' traffic expert see no safety issues with the configuration of the proposed intersection. The road will also be a typical suburban street with standard use anticipated.

3. The Committee accepts that there are few options for access to the subject sites. The other options are considered impracticable and/or involve land outside the applicant's control. There are no advantages in terms of subdivision design to have the road placed elsewhere. In terms of effects, an alternative connection point onto Hagart-Alexander Drive would not necessarily mitigate any adverse noise or amenity effects that might be associated with the road, but merely impose the effects on other persons. Given that an alternative route would likely have the road in closer proximity to other houses, the effects could well be greater. The Committee considers that the proposed connection onto Hagart-Alexander Drive is the most appropriate means of accessing this land, given the limited options.

4. The land is zoned Residential 1, and roads are an expected and necessary component of residential development. The submitters live on a District Road which the District Plan anticipates will provide connections to residential areas. This road is shown on the Mosgiel Borough Scheme Plan of 1983 as a 'Local Arterial Road', so its status as a main road for Mosgiel is well established. There is also an intersection with Beech Street in this location. The proposed road will change the immediate environment of the submitters' properties by introducing a side road between their properties, but the road will be typical of a suburban road and should be anticipated in this zone. The Committee does not consider that the effects of an adequately constructed road, to be used for residential development in a Residential 1 zone, will be unacceptable. This

includes the traffic generated by the proposed development, and all associated effects.

5. The Committee notes that Parks and Recreation Services are agreeable to the construction of an access through what is currently esplanade reserve. The new road will open up public access to the southeast side of the watercourse, and the applicant proposes enhancing the amenity values of the southeast bank. This will have benefits for the wider community.

6. Parks and Recreation Services also seek to retain the land not needed for legal road as esplanade reserve. This will include a portion of the strip of land between 110 and 112 Hagart-Alexander Drive. If the new road is to be perfectly aligned with Beech Street, several metres of reserve land will be available between 110 Hagart-Alexander Drive and the new road. As such, 110 Hagart-Alexander Drive will not become a corner site, and its southwest boundary will not be a front boundary. There will be no bulk and location breaches in respect of the existing house arising from a change in status of the boundary. The existing driveway onto Hagart-Alexander Drive will also remain a fully compliant access. Any planting will be placed on the road reserve, some distance from the side boundary of 110 Hagart-Alexander Drive.

7. As the land next to 110 Hagart-Alexander Drive is currently reserve land and is to be retained as esplanade reserve, the applicant is unable to transfer a 2.5m strip of it to the owners of 110 Hagart-Alexander Drive as part of the subdivision process. The Committee is unable to make this happen, but the owners of 110 Hagart-Alexander Drive do have the option of applying to acquire this land if they so desire. The revoking of the reserve status and the disposal of this land from Council ownership will have to follow a separate statutory process. The Committee cannot guarantee that any such application will be successful.

8. The transfer of a 3.0m strip of land to the property of 114 Hagart-Alexander Drive is a simpler process because it is currently private land. This transfer could be done as part of the subdivision proposal. It would require this land to be defined as an additional lot with an amalgamation condition imposed to hold it with 114 Hagart-Alexander Drive. However, the Committee considers that this action has no benefits in terms of mitigating the effects of a road in this location, and does not require it to occur as a condition of consent. While the Council is not against the transfer of this land, provided adequate land for road reserve is retained, any such decision will be the result of an agreement between the property owners and the developer. In the absence of any agreement, the Committee requires this land to be vested as legal road. Once the land becomes legal road, it is a far more involved process to 'stop' the road and issue title for it, and any such action will need to be initiated by the owners of 114 Hagart-Alexander Drive, at their expense.

9. The Committee considers that the construction of an acoustic fence along the present side boundary fences of 110 and 114 Hagart-Alexander is appropriate. This will provide enhanced acoustic protection against noise associated with the new road while making no difference to the visual appearance of the fencing when viewed from the submitter's houses. The Committee does not consider that new fencing of this nature is inappropriate or unattractive for residential areas when viewed from off-site. While the submitters have requested fences to match their present front fences, the purpose of the fencing is to provide acoustic insulation and not to provide betterment as such. The brick and pillar fence (with trellis inserts), for example, is not appropriate as a sound mitigation measure, and it is not fair or reasonable to require the applicant to construct such a fence. However, if the submitters and applicant agree on an alternative design, or designs, of fencing based more on appearance than sound mitigation, then the Committee considers that the applicant should contribute to the cost of the fence up to the amount that would have been spent on the acoustic fencing it replaces.

10. The owners of 114 Hagart-Alexander Drive have concerns about the position of the existing driveway in relation to the new intersection. Council's Transportation Planner is of the opinion that the access can operate in a safe manner as there is on-site manoeuvring available, and ample berm space for drivers to stop and observe before pulling out. There are a number of existing driveways onto Hagart-Alexander Drive which do not meet the required separation distance from the closest intersection, and none of these accesses appear to operate in an unsafe manner. Therefore, while it is not ideal to have the access to 114 Hagart-Alexander Drive next to the new road, the Committee considers it to be less of an issue than the submitters have stated. However, if the driveway position is of any concern to the submitters, they have the option of a fully complying driveway being installed onto the new road. This would also have the advantage of freeing up yard space along the northeast wall of the house for amenity purposes. If the owners of 114 Hagart-Alexander Drive decide to relocate their driveway, the Committee considers that the applicant should undertake the installation of a new driveway from the edge of the new carriageway to the present property boundary (not the new boundary created by the transference of land, should that eventuate) of 114 Hagart-Alexander Drive, at the applicant's expense as part of the subdivision works. If the property owners choose not to relocate the driveway, then it should be recognised that the use of the present driveway is also at their choice.

11. The submitters have raised concerns about aspects of the subdivision which have no effect on the submitters or their properties. They also appear to be of the view that Council's staff and consultants cannot assess the proposal fully without detailed design. In fact, bar the matter of the new road to the site, the application is entirely typical for large greenfield subdivision proposal, and the conditions of the consent in line with those imposed on other developments. Detailed design is normally undertaken as part of the section 224(c) certification works, and Council staff and consultants are quite capable of determining the appropriate standards to be applied at that time. These standards are determined by the Code of Subdivision and Development 2010 and/or are within the staff's and consultant's areas of expertise. The broad purpose of the subdivision consent is to determine that the effects of the proposal are within the expectations of the District Plan or can be mitigated adequately, and to ensure that the subdivision works are undertaken at an appropriate time and to the correct standard. The suitability of the land for development has already been determined prior to, or as part of, this consent.

12. While the submitters have correctly noted that the subdivision is a non-complying proposal, opening all matters of the proposal up for consideration, they also need to realise that the non-complying activity status of this proposal is considered to be a technicality which could be resolved by each new lot having its own access (i.e. no rights of way). There would be no obvious change to the development itself. The non-complying activity status should not be taken as an indication of any deficiency in the proposal, and the submitters would be unwise to read more into the non-complying activity status than is the reality.

13. The esplanade reserve, excepting the strip though to Hagart-Alexander Drive, is within an urban landscape conservation area. The Committee is aware that such areas are found within urban environments, and that having built development in close proximity is to be expected. There are no controls imposed on such development because of its relationship to an urban landscape conservation area. The proposed development of the subject site is therefore appropriate in this context.

14. Structures *within* urban landscape conservation areas are controlled activities and should therefore be expected. Control is restricted to the impacts arising from the location, design and appearance of the structure and site development on the 'natural' landscape qualities and character of the setting. The future bridge or culvert over the watercourse will therefore be assessed more fully once there is a design for the structure finalised and specific resource consent has been applied for. The Committee

has viewed the bridges at Brooklands Place and Brooklands Village, and does not consider that these structures adversely affect the urban landscape conservation area or watercourse. For this reason, the Committee does not expect a similar structure at the subject site will have any more of a negative impact on the values of the urban landscape conservation area than these existing bridges located further along the same watercourse.

15. Earthworks are a necessary and temporary component of any development proposal. The applicant has elected to obtain a separate earthworks consent for the works once greater detail about the volumes and changes in ground levels is available. This is entirely acceptable. The Committee advises that the earthworks application, when received at Council, will not be notified, and it is not Council's practise to consider neighbours as affected parties unless the earthworks are to significantly change ground levels in close proximity to their boundary. The road construction at the Hagart-Alexander Drive entranceway is expected to follow the general topography of the land, and the Committee notes that 110 Hagart-Alexander Drive will not share a boundary with the new road. It is recommended that the submitters, if they have any concerns about possible damage to their housing as a result of the subdivision works, consult with the developer prior to works commencing in order to put on record the state of their property at the start of the project. Likewise, the developer should have the opportunity to record the state of the properties prior to works commencing if there is any possibility of a claim for damages. Council is prepared to hold these records, but will not be involved in any agreement or dispute between the parties.

16. The Committee has considered the matter of the earth bunds to be constructed next to the new road between 110 and 114 Hagart-Alexander Drive. The Committee considers that, as there is to be acoustic fencing constructed on the neighbouring property boundaries, the bunds will have limited benefit as a noise insulation measure. However, the Committee would like to see appropriate vegetation for screening and noise mitigation planted along the roadsides, and requires the applicant to pay a bond of $2000 to ensure the vegetation is maintained for the first five years.

17. The Committee considers that the proposed subdivision is consistent with the relevant objectives and policies of the District Plan. The Committee understands that there will be detailed design of the subdivision to follow the issuing of consent and that no Council department or consultant has identified any matters which could be fatal to the undertaking of the subdivision. The applicant will also need to obtain further consent for the crossing of the watercourse, and earthworks, and these applications will be assessed appropriately in due course. The applicant has provided further information about the intersection design, and the only matter of possible concern, being the relationship of the driveway to 114 Hagart-Alexander Drive to the intersection, can be resolved if the property owners so decide. The Committee does not agree with the submitters' planners' assessment where the proposal is said to be 'inconsistent' or 'contrary' with some objectives and policies.

18. The applicant has applied for a 10 year lapse period. Section 125 of the Resource Management Act 1991 allows the Council to specify a lapse date as part of the consent, with the default date being a period of five years. The Committee considers a 10 year lapse period is acceptable as the development is unlikely to be completed within eight years (five years to s223 certification plus three years to s224(c) certification). A 10 year lapse period is also consistent with that of other large subdivisions. The Committee notes that the work on the road from Hagart-Alexander Drive will be undertaken early in the project as this road is necessary for access to the development. Thereafter, construction works will be undertaken some distance from the submitters' properties and the 10 year lapse period will probably have less of an impact on the submitters than they may anticipate.

19. The Committee notes the submitters' concerns about potential cumulative effects if the land to the northeast of the subject sites is developed, with access via this

subdivision. The neighbouring land is currently zoned Rural, and there are no development rights presently available for this land. Any proposal for development involving one or more residential dwellings, subdivision, or rezoning of this land will require an application and full assessment to be undertaken by Council at that time. The reserving of a future road link to this land is therefore not an indication that this land is to be developed, creating cumulative effects, but merely a forward-thinking action in case alternative access to this subdivision becomes possible in the future.

20. The applicant has offered a mitigation package including a $5000 payment to the owners of each of 110 and 114 Hagart-Alexander Drive respectively. The Committee is unable to make this a condition of consent as it involves third parties, but are confident that the applicant will honour this payment in accordance with the terms set out in the applicant's written right of reply received at Council on 12 February 2015.

21. Section 104 of the Act requires that the Council take into account Regional Policy Statements and rules of any plan or proposed plan. The proposal was found to be consistent with the objectives and policies of the Regional Policy Statement for Otago.

22. The Committee considers that the effects of the proposal will be no more than minor, and the proposal is not contrary to the objectives and policies of the District Plan. Accordingly, the proposal is considered to meet both gateways of the section 104D test, and the Committee is a position to consider the granting of consent.

23. The Committee considers that the subdivision and land use proposals satisfy the relevant sections of Part II of the Act.

Right of Appeal

In accordance with section 120 of the Resource Management Act 1991, the applicant and/or any submitter may appeal to the Environment Court against the whole or any part of this decision within 15 working days of the notice of this decision being received. The address of the Environment Court is:

The Registrar
Environment Court
PO Box 2069
Christchurch 8140

Any appeal must be served on the following persons and organisations:

- The Dunedin City Council.
- The applicants.
- Every person who made a submission on the application.

Failure to follow the procedures prescribed in sections 120 and 121 of the Resource Management Act 1991 may invalidate any appeal.

Please direct any enquiries you may have regarding this decision to Lianne Darby, whose address for service is City Planning, Dunedin City Council, PO Box 5045, Dunedin 9058.

DEVELOPMENT CONTRIBUTIONS

In accordance with Section 198 of the Local Government Act 2002 and the Dunedin City Council Policy on Development Contributions of the adopted 2009/10 – 2018/19 Community Plan, a development contribution of $22965.04 (including GST) will be payable on this development. This contribution has been calculated as set out below:

Subdivision creating residential lots, Lots 1 to 81, 103 and 104, giving credit for two existing sites (CFRs OT9C/1038 & OT258/263) and 112 Hagart-Alexander Drive (CFR OT13B/881).

Contribution Area	Rate per Unit of Demand 2009/10#	Additional Units of Demand	Contribution excluding GST
City Wide Reserves Contribution	$249.62 per unit	80	$19969.60
		GST:	$2995.44
		Total:	$22965.04

In the event that the development contribution for this consent is not paid, the Council may pursuant to section 208 of the Local Government Act 2002:

a) withhold a certificate under section 224(c) of the Resource Management Act 1991 and

b) register the development contribution under the Statutory Land Charges Registration Act 1928, as a charge on the title of the land in respect of which the development contribution was required.

Yours faithfully

David Benson-Pope
CHAIR
HEARINGS COMMITTEE

Consent Type: Subdivision & Land Use

Consent Number: SUB-2014-91 & LUC-2014-323

Location of Activity: 67 & 67A Gladstone Road North, 112 Hagart-Alexander Drive, & Local Purpose Reserve (Esplanade), Mosgiel

Legal Description: Part Section 4 Block II East Taieri Survey District (CFR OT258/263 Ltd – Part Cancelled), Lot 1 Deposited Plan 18347 (CFR OT9C/1038), Lot 23 Deposited Plan 17999 (CFR OT13B/881), and part of Lot 2 Deposited Plan 18347 (CFR OT18A/955).

Lapse Date: 27 February 2025, unless the consent has been given effect to before this date.

Subdivision SUB-2014-91

That pursuant to section 34A(1) and 104B, and after having regard to Part II matters and sections 104 and 104D of the Resource Management Act 1991, the Dunedin City Council ***grants*** *consent to a* ***non-complying*** *activity being the subdivision of 67 and 67A Gladstone Road North, Mosgiel, being the sites legally described as Part Section 4 Block II East Taieri Survey District (CFR OT258/263 Ltd – Part Cancelled) and Lot 1 DP 18347 (CFR OT9C/1038) into 82 residential lots, stormwater management lot, roading and balance land, with legal access to be obtained over 112 Hagart-Alexander Drive, legally described as Lot 23 DP 17999 (CFR OT13B/881) and Local Purpose Reserve (Esplanade), legally described as Lot 2 DP 18347 (CFR OT18A/955), subject to the conditions imposed under sections 108 and 220 of the Act, as follows:*

1. *The proposal shall be given effect to generally in accordance with the revised plan prepared by Paterson Pitts Group entitled, 'Owhiro Part Subdivision Layout Plan,' dated 1 May 2014, received at Council on 13 October 2014, and the accompanying information submitted as part of SUB-2014-91 received by Council on 27 June 2014, and the further information received at Council on 18 December 2014 and the applicant's written right of reply received at Council on 12 February 2015, except where modified by the following:*

2. *Prior to certification of the survey plan pursuant to section 223 of the Resource Management Act 1991, the applicant shall ensure the following:*

    a) *If a requirement for any easements for services is incurred during the survey then those easements shall be granted or reserved and included in a Memorandum of Easements on the survey plan.*

    b) *That the width of the future legal road between Hagart-Alexander Drive to the south side of the Owhiro Stream shall have a minimum width of 20.0m. This will be comprised of Local Purpose Reserve (Road) and road to vest.*

    c) *That the consent holder shall provide to the Council all documentation necessary to enable the portion of Local Purpose Reserve (Esplanade) to be reclassified as Local Purpose Reserve (Road) in order to achieve legal access to the development. This area shall be generally consistent with*

the land shown on the application plan as '(A) to become Local Road' except that a strip of Local Purpose Reserve (Esplanade) is to be maintained along the north-eastern edge next to 110 Hagart-Alexander Drive. This strip shall be at least 2.0m wide.

d) That, if land of the present 112 Hagart-Alexander Drive is to be transferred to the owners of 114 Hagart-Alexander Drive, then an additional lot shall be shown on the plan between the present north-eastern side boundary of 114 Hagart-Alexander Drive and the new road. This lot shall be amalgamated with the land of 114 Hagart-Alexander Drive. The legal width of the new road shall not be narrower than 20.0m as a result of the transfer of land.

e) That Right of Way C shall be duly created or reserved over new Lot 7 in favour of Lots 5, 6, and 8 to 11, and shall be shown on the plan in a Memorandum of Easements. It shall have a minimum legal width of 6.0m where serving four or more residences, and a minimum legal width of 3.5m where serving three or fewer residences.

f) That Right of Way D shall be duly created or reserved over new Lot 21 in favour of Lot 20, and shall be shown in on the plan in a Memorandum of Easements. It shall have a minimum legal width of 3.5m.

g) That Rights of Way E and F shall be duly created or reserved over Lots 32 and 33 in favour of Lots 33 and 103, as appropriate, and shall be shown on the plan in a Memorandum of Easements. It shall have a minimum legal width of 6.0m.

h) That Right of Way G shall be duly created or reserved over new Lot 77 in favour of Lots 42, 73 to 76, and 78 to 81, and shall be shown on the plan in a Memorandum of Easements. It shall have a minimum legal width of 6.0m where serving four or more residences, and a minimum legal width of 3.5m where serving three or fewer residences.

i) That Right of Way H shall be duly created or reserved over new Lot 80 in favour of Lot 81, and shall be shown on the plan in a Memorandum of Easements. It shall have a minimum legal width of 3.5m.

j) That Right of Way J shall be duly created or reserved over new Lot 45 in favour of Lot 44, and shall be shown on the plan in a Memorandum of Easements. It shall have a minimum legal width of 3.5m.

k) That Lots 100 and 101 shall be shown on the plan as vesting with Council as road.

l) That an additional lot, Lot 105, shown in the vicinity of Lots 13 to 19, shall be shown on the plan as vesting with Council as road or road reserve. This lot shall extend the full width between the new road, Lot 100, and the northeast boundary shared with Lot 9 DP 254. The lot shall have a minimum width of 16.0m, and its position shall be approved by the Transportation Manager.

m) That an easement in gross in favour of the Dunedin City Council shall be duly created or reserved over any servicing infrastructure (water, stormwater or wastewater) to be vested with Council which is located within privately owned property, and shall be shown on the plan in a Memorandum of Easements in Gross. The easements shall be made in accordance with the relevant section/s of the Dunedin Code of Subdivision and Development 2010.

n) That any easements for drainage to pass over the Local Purpose Reserve (Esplanade) shall be first approved by the Group Manager, Parks, Recreation and Aquatics.

3. *Prior to certification pursuant to section 224(c) of the Resource Management Act 1991, the applicant shall complete the following:*

a) The subdividing owner of the land shall provide a letter to the Council advising who their representative shall be for the design and execution of the engineering works required in association with this subdivision and shall confirm that this representative will be responsible for all aspects of the works covered under NZS4404:2004 "Code of Practice for Urban Land Subdivision" in relation to this development.

<u>Pre-Construction</u>

b) That a site specific geotechnical investigation of the subject site be undertaken by an appropriately qualified person to determine the potential for amplified movements and liquefaction of soils during significant seismic events. Dynamic cone testing to 10m depth is recommended to classify the potential for liquefaction for each dwelling. The report shall determine whether specifically designed ground improvements works are required. These shall be addressed through the earthworks phase of the project which will require additional resource consent.

c) The consent holder shall provide detailed engineering plans and associated calculations of how the subdivision is to be serviced for water, stormwater and wastewater to the Asset Planning Engineer, Water and Waste Services Business Unit, for approval prior to any works commencing on-site. The engineering plans and associated calculations shall meet the requirements of the Construction Plan Check List.

d) Prior to the commencement of any construction on site, the consent holder shall submit for the approval of the Parks Officer a detailed landscape plan for the southern bank of the Owhiro Stream (local purpose esplanade reserve). This plan shall include plant species and the proposed construction details for the walking track.

<u>Construction Period</u>

e) That the property owners of 110 and 114 Hagart-Alexander Drive shall be notified in writing at least 10 days prior to construction works commencing on the removal of the house of 112 Hagart-Alexander Drive and again prior to the construction commencing of the new road between Hagart-Alexander Drive and the Owhiro Stream. The letters shall contain information on the general time frames expected for the works.

f) All construction work on the site shall be designed and conducted to ensure that construction noise does not exceed the noise limits in the following table.

Time of Week	*Time Period*	*Leq (dBA)*	*L max(dBA)*
Weekdays	*0730-1800*	*75*	*90*
	1800-2000	*70*	*85*
	2000-0730	*45*	*75*
Saturdays	*0730-1800*	*75*	*90*

	1800-2000	*45*	*75*
	2000-0730	*45*	*75*
Sundays and public holidays	*0730-1800*	*55*	*85*
	1800-2000	*45*	*75*

Sound levels shall be measured and assessed in accordance with the provisions of NZS 6803: 1999 Acoustics – Construction noise. Please Note: the lower noise limits on Sundays and Public Holidays may mean that no construction work can occur on these days.

Water Supply

g) An "Application for Water Supply – New Service" shall be submitted to the Water and Waste Services Business Unit for approval to establish new water connections to each unserviced residential lot. Details of how each new lot is to be serviced for water shall accompany the application.

h) Upon approval by the Water and Waste Services Business Unit, water service connections shall be installed in accordance with the requirements of Section 6.6.2 of the Dunedin Code of Subdivision and Development 2010.

Stormwater Services

i) A Stormwater Management Plan for the subdivision shall be provided to the Water and Waste Services Manager for approval prior to works commencing. The Stormwater Management Plan shall outline how stormwater from the subdivision will be managed to ensure post-development flows do not exceed pre-development flows, and identify and address any downstream effects of the stormwater generated by the development, including any mitigation required.

j) The stormwater management of the subdivision shall be undertaken in accordance with the approved Stormwater Management Plan. Either:

- *a consent notice shall be prepared requiring on-site retention tanks to be installed on each new lot. The consent notice shall read as follows in condition 3(k); or*
- *A stormwater retention system which caters for all the lots shall be built on Lot 102. This could be in the form of a retention pond or similar. The details of any combined stormwater retention system shall be approved by the Water and Waste Services Business Unit.*

k) That, if using individual on-site stormwater retention, a consent notice shall be prepared for registration on the residential lots for the following on-going condition:

> *'Prior to residential activity being established on this site, a stormwater retention tank, to retain all stormwater run-off from roof and any hard stand area surface, shall be installed. The tank shall have a minimum storage capacity of 3000 litres, or another volume as agreed with the Water and Waste Services Business Unit at the Dunedin City Council. Primary discharge shall be through a restricted aperture located near the invert of the tank, which shall be specifically designed to pass 0.5 litres per second. Secondary discharge shall be by way of a standard 100mm diameter drain installed at the top*

of the tank which shall provide an escape route for water during extreme rainfall events.'

Foul Sewer Services

l) That all wastewater infrastructure shall be installed in accordance with Section 5 of the Dunedin Code of Subdivision and Development 2010, unless specifically authorised by the Network Engineer, Water and Waste Services Business Unit.

Erosion and Sediment Control

m) That all practicable measures shall be used to mitigate erosion and to control and contain sediment-laden stormwater run-off from the site during any stages of site disturbance that may be associated with this subdivision.

Transportation

n) Detailed engineering plans, including cross sections, showing the details of the construction of the new road (Design A, as submitted in the further information received at Council on 18 December 2014) shall be submitted to, and approved by, the Group Manager Transportation, in consultation with the Group Manager Parks, Recreation and Aquatics, prior to construction.

o) If the property owners of 114 Hagart-Alexander Drive desire to relocate their vehicle entrance to the new road, the consent holder shall install a compliant access between the carriageway of the new road and the existing property boundary of 114 Hagart-Alexander Drive at the consent holder's expense. The existing Hagart-Alexander Drive access to the property shall also be reinstated as kerb and channel and grass up to the edge of the footpath, at the consent holder's expense. The consent holder is not responsible for internal alterations to the layout of the property which might be undertaken.

p) Detailed design of the road intersection of Hagart-Alexander Drive and the new road shall be carried out by a suitably qualified engineer, and shall ensure all safety and efficiency matters are adequately addressed.

q) The proposed bridge or culvert shall be designed so that routine maintenance is able to be undertaken on it without impeding the two-way vehicular road operating conditions.

r) Vegetation with a maximum height of 2.0m shall be established within the new legal road between 110 and 114 Hagart-Alexander Drive. Details of the proposed vegetation shall be submitted to the Resource Consents Manager for approval prior to planting commencing.

s) Upon completion of construction of the new road, all works shall be tested to demonstrate that they meet the acceptance requirements of the Dunedin Code of Subdivision and Development 2010.

t) All private accesses shall be formed in accordance with the widths specified in Rule 20.5.7(v)(b) of the District Plan, and be hard surfaced and adequately drained for their duration.

Urban Landscape Conservation Area Development

u) That the enhancement of the urban landscape conservation area shall be undertaken in accordance with the approved plans of condition 3(d) above.

v) Any physical works within the reserve area, except for work required to install the new access road shall be undertaken after the completion of the bulk earthworks. This is to ensure the existing vegetation within the reserve is available as a means of sediment control to protect the stream. (Note: the vegetation should not be relied upon as the significant form of sediment control during the earthworks).

w) Prior to the construction of the access road, the consent holder shall submit for the approval of the Parks Officer a landscape and maintenance plan for vegetation on each side of the new road. All landscaping shall be implemented in accordance with the approved plan. The consent holder is expected to maintain the vegetation for a period of five years.

x) The consent holder shall pay Council a $2000 bond for the on-going maintenance over a five year period of the roadside vegetation of condition 3(r) above. The bond will also cover any requirement to replace sick or dying plants.

y) Prior to the commencement of any works on site the consent holder shall submit for the approval of the Parks Officer an erosion and sediment control plan. The plan should demonstrate how the esplanade reserve shall be protected during the earthworks for the project. (Note: this condition is specific to the protection of the esplanade reserve. A more complete plan may be required for other aspects of the development).

z) Prior to the construction of the access road from Hagart-Alexander Drive to the proposed development the consent holder shall submit a plan for the approval of the parks officer showing the access points to all four areas of local purpose esplanade reserve adjoining the access road. The access points shall be a minimum of 2.0m in width and the design shall be suitable for maintenance vehicles and pedestrians.

aa) Prior to the submission of any drainage plans the consent holder must seek the approval of the Parks, Recreation and Aquatics Department for any drains that are proposed to cross the adjacent reserve. Appropriate legal instruments will be required for any drains that cross the reserve. The consent holder shall be responsible for all costs associated with the preparation of the documentation.

General

bb) That prior to construction works commencing on the new road to the development, acoustic fencing shall be attached to the outer side of the existing fencing of 110 and 114 Hagart-Alexander Drive. The fencing shall be at least as high as the existing fence, but shall be no higher than 2.0m unless the property owners seek a higher fence and resource consent is obtained. Alternatively, if the property owners want a fence of a different design along their boundaries, the consent holder shall contribute to the cost of a new fence of any design up to the value of the acoustic fencing which it is replacing.

cc) That a 1.8m high fence shall be constructed along the railway edge of the subdivision up to the southeast corner of Lot 103 to prevent pedestrians crossing the railway line. The fence shall extend along the northeast

boundary of Lot 20, and along the northeast boundary of Lot 103 for at least 50.0m.

dd) That vehicle access shall be formed between Lot 100 (road to vest) and Brooklands Village, to be utilised only in emergencies. A removable barrier or gate shall be erected to prevent casual through-traffic.

ee) That a consent notice shall be registered on the titles of those lots affected by the access of condition 3(dd) above, for the following on-going condition:

> *'Vehicle access through this property shall be made available for emergency services, and all residents of Brooklands Village and/or the residential lots of DP …, if either Balmoral Avenue or [insert name of new road to subdivision] is blocked because of a natural hazard (such as flooding) or an emergency. This access is only to be used during the period of the blockage.'*

ff) That a consent notice shall be registered on the titles of those lots abutting the esplanade reserve for the following on-going conditions:

> *'All stormwater from the site shall be captured and disposed of to an approved drain. No stormwater is to be drained onto the Council reserve.'*
>
> *'The costs of fencing on any boundary shared with Council shall be met by the property owner.'*
>
> *'All fencing on the reserve boundary shall be restricted to a maximum of 1.2 metres in height or 1.8 metres in height with 40% permeability.'*

gg) That a consent notice be prepared for registration on the titles of Lots 20 to 33 for the following on-going condition:

> *'All buildings, balconies and decks on this site shall be set back from the boundary with the railway corridor by a minimum of 10.0m.'*
>
> *'Buildings shall be designed, constructed and maintained to ensure the following internal design noise limits are not exceeded, and shall take into account future use of the Main South Railway Line by the addition of 3dB to existing measured or calculated sound levels.'*

Receiving Environment (New, relocated or altered)	***Criterion***
Residential - Bedrooms	*35* $dB_{LAeq,\ 1\ hour}$
Residential – Habitable Spaces	*40* $dB_{LAeq,\ 1\ hour}$
Primary Outdoor Amenity Areas	*60* $dB_{LAeq,\ 1\ hour}$

> *'Where it is necessary to have windows closed to achieve the acoustic design requirements above, an alternative ventilation system shall be installed to provide thermal comfort. To achieve thermal comfort, the following requirements for a ventilation system are recommended:*
>
> - *A quantity of air shall be provided to achieve the requirements of Clause G4 of the New Zealand Building*

Code. At the same time as meeting this requirement, the sound of the system shall not exceed 30dB LAeq(30s) when measured 1.0m away from any grille or diffuser.

- *Either: air conditioning shall be provided; or a high air flow rate setting shall provide at least 15 air changes per hour (ACH) in the principal living space and at least 5 CH in all other habitable spaces.*
- *At the same time as meeting the above requirement in b), the sound of the system shall not exceed 40dB LA31(30s) in the principal living space and 35dB LAeq(e0s) in all other habitable spaces, when measured 1.0m away from any grille or diffuser.*
- *The internal air pressure shall be no more than 10 Pa above ambient air pressure due to the mechanical ventilation.*
- *Where a high air flow rate setting is provided, the system shall be controllable by the occupants to be able to alter the ventilation rate with at least three equal stages up to the high setting.*

'Any new building developed for a noise sensitive activity within these sites shall comply with Class C vibration limits in NS 8176E:2005.'

'The property owner shall recognise that the property is located adjacent to the Main South Line. The lawful operation of this railway line may result in the occupier experiencing noise and vibration effects. The owners of the land acknowledge that these effects are typical of living near the Main South Line and will not therefore make complaints to the Dunedin City Council or any other party concerning such effects arising from the lawful operation of the Main South Line.'

hh) The subdivider shall provide to Council 'as-built' plans and information detailing all engineering works completed in relation to or in association with this subdivision.

Such "as-built" plans of:

(i) the water reticulation pipes laid within the subdivision shall include the locations of hydrants, valves, pipelines, service connections and manifold box installations and details of the pipeline materials and depth of cover over the pipelines. Written confirmation shall also be given that only approved materials have been used in the construction of the water reticulation in the subdivision.

(ii) the foul and stormwater system shall show laterals for each lot.

<u>Land Use LUC-2014-323</u>

*That pursuant to section 34A(1) and 104C and after having regard to section 104 of the Resource Management Act 1991, the Dunedin City Council **grants** consent to a **restricted discretionary** activity being the creation of a new lot with no access or frontage to legal road at Lot 104 SUB-2014-91, part of 67 and 67A Gladstone Road North, Mosgiel, subject to conditions imposed under section 108 of the Act as follows:*

1. *The proposal shall be given effect to generally in accordance with the plan prepared by Paterson Pitts Group entitled, 'Owhiro Park Subdivision Layout Plan,' and the accompanying information submitted as part of LUC-2014-323 received by Council on 17 June 2014, except where modified by the following:*

2. *That a covenant holding Lot 104 with an adjoining title having physical and legal access shall be entered into between the developer and the Council.*

Advice Notes

1. In addition to the conditions of a resource consent, the Resource Management Act establishes through sections 16 and 17 a duty for all persons to avoid unreasonable noise, and to avoid, remedy or mitigate any adverse effect created from an activity they undertake. A similar responsibility exists under the Health Act 1956.

2. The lapse period specified above may be extended on application to the Council pursuant to section 125 of the Resource Management Act 1991.

3. It is the consent holder's responsibility to comply with any conditions imposed on their resource consent prior to and during (as applicable) exercising the resource consent. Failure to comply with the conditions may result in prosecution, the penalties for which are outlined in section 339 of the Resource Management Act 1991.

4. This is resource consent. Please contact the Building Control Office, Development Services, about the need for building consent for any construction work as part of the subdivision.

5. The Water and Waste Services Business Unit require that the installation and connection of new water reticulation to the existing public water system shall be carried out after the consent holder has completed and submitted an 'Application for Water Supply' form to the Council and following the consent holder's acceptance of the quote for the required work (as per the Dunedin City Council's Terms and Conditions for the Supply of Water and the Dunedin City Council Code of Subdivision (Part 4)). A quote for the required work must be obtained from an approved water supply connection installer (AWSCI). The list of AWSCI's, application form and the full process can be found here http://www.dunedin.govt.nz/services/water-supply/new-water-connections.

6. The consent holder is to ensure that all practicable measures are used to mitigate erosion and to control and contain sediment-laden stormwater run-off from the site during any stages of site disturbance that may be associated with this subdivision.

7. The following documentation is recommended as best practice guidelines for managing erosion and sediment –laden run-off and for the design and construction of erosion and sediment control measures for small sites:

   - ARC Technical Publication No. 90 Erosion and Sediment Control Guidelines for Land Disturbing Activities in the Auckland Region, March 1999.
   - Environment Canterbury, 2007 'Erosion and Sediment Control Guidelines for the Canterbury Region" Report No. CRCR06/23.
   - Environment Canterbury, 2007 "Erosion and Sediment Control Guidelines for Small Sites."

8. All aspects relating to the availability of the water for fire-fighting should be in accordance with SNZ PAS 4509:2008, being the Fire Service Code of Practice for Fire Fighting Water Supplies, unless otherwise approved by the New Zealand Fire Service. Any new development must be within 135m of a fire hydrant, otherwise the proposal will be non-compliant with fire-fighting requirements.

9. Parts 4, 5 and 6 (Stormwater Drainage, Wastewater and Water Supply) of the Dunedin Code of Subdivision and Development 2010 must be complied with.

10. It is advised that any drainage issues and requirements (including the necessary works) will be addressed via the building consent process.

11. Certain requirements for building on this land may be stipulated via the building consent process, and are likely to include the following points:
    - For sites level with or above the road, the finished floor level of any building is to be a minimum of 150mm above the crown of the road.
    - For sites below the road, the finished floor level is to be no less than 150mm above the lowest point on the site boundary. Surface water is not to create a nuisance on any adjoining properties.
    - For secondary flow paths, the finished floor level shall be set at the height of the secondary flow plus an allowance for free board.
    - As required by the New Zealand Building Code E1.3.2, surface water resulting from an event having a 2% probability of occurring annually, shall not enter buildings. The finished floor level shall be set accordingly.

12. This consent does not address any earthworks for this subdivision associated with the development of the new roads, access lots, new lots, or the formation of any new access, manoeuvring areas, or retaining walls. Should earthworks on-site breach the performance standards of Section 17 of the District Plan, further consent will be required. Land use consent may also be required for any structures, such as retaining walls supporting fill or surcharge, near to boundaries.

13. Parking and on-site manoeuvring will be assessed for development on each new lot at the time of building consent or resource consent application.

14. It is recommended that a formal agreement be drawn up between the owners and users of the access lots to clarify the responsibilities for the maintenance of the access lots.

15. It is advised that the vehicle access from the carriageway to the property boundary is over road reserve and is therefore required to be constructed in accordance with the Dunedin City Council Vehicle Entrance Specification (available from Transportation Operations).

16. It is recommended that, if the property owners of 110 and/or 114 Hagart-Alexander Drive have concerns about possible damage to their properties during the construction phase of the subdivision works, they take the opportunity to meet with the developer on their sites prior to construction works commencing with a view to recording the present state of the properties. The developer should also be able to initiate an inspection of their properties prior to works commencing. Council is prepared to hold these records, but will not be involved in any subsequent agreement or dispute that may result between the parties.

17. It is advised that the Council does not share responsibility for the maintenance of fences on front boundaries or reserve land. The developer has offered to pay 50% of the maintenance costs of the new fencing for 110 and 114 Hagart-Alexander Drive during the period of subdivision works only (i.e. up to the signing of the s224(c) certificate of SUB-2014-91 or any subsequent variation of this consent). This offer does not extend to the period of development of the new lots. The Council will not be involved in administering this work or in any dispute that may result between the parties.

Issued at Dunedin this 27 February 2015

Yours faithfully

David Benson-Pope
CHAIR
HEARINGS COMMITTEE

COPY OF PLAN: Not to scale.

16 June 2015

Minaret Resources Limited
C/- Kurt Bowen
Paterson Pitts Group
PO Box 5933
Moray Place
Dunedin 9058

Dear Kurt

RESOURCE CONSENT APPLICATION: SUB-2014-91/B & LUC-2014-323/A
VARYING SUB-2014-91 & LUC-2014-323
67 & 67A GLADSTONE ROAD NORTH
112 HARGART ALEXANDER DRIVE
ESPLANADE RESERVE
MOSGIEL

Your application for the variation of resource consents SUB-2014-91, to stage the subdivision at 67 and 67A Gladstone Road North and 112 Hagart Alexander Drive, Mosgiel, and to change the layout of the new roading, and LUC-2014-323, to refer to the new subdivision plan and to recognise the creation of lots with no legal access or frontage, lodged pursuant to section 127 of the Resource Management Act 1991, was processed on a non-notified basis in accordance with sections 95A to 95G of the Resource Management Act 1991. In considering sections 95A to 95G, it was determined that the effects would be no more than minor, there were no affected parties, and there were no special circumstances in relation to the proposal. Therefore, public notification of the application was not required. The application was considered under delegated authority on 16 June 2015.

I advise that the Council has **granted** the request for a change of conditions. The full text of the decision commences on the attached certificate.

BACKGROUND TO APPLICATION

Resource consent SUB-2011-91 for the subdivision of the above sites into 81 residential lots, roading, and reserve, and land use consent LUC-2014-323 for the creation of a new lot with no access or frontage to legal road, was processed on a limited notified basis. The applications were granted on 27 February 2015, subject to conditions of consent.

The subject sites are:

- 67 Gladstone Road North, legally described as Part Section 4 Block II East Taieri Survey District (CFR OT258/263 Ltd – Part Cancelled). The title shows the area to be 20.3582ha, but the part-cancellation of this title removed 15.7170ha from the site in 1974 leaving an area of 4.6412ha. Council's cadastral layer of GIS shows it to have an area of 4.733ha;
- 67A Gladstone Road North, legally described as Lot 1 Deposited Plan 18347 (CFR OT9C/1038), with an area of 2.8443ha;

- 112 Hagart-Alexander Drive, legally described as Lot 23 Deposited Plan 17999 (CFR OT13B/881), with an area of 696m^2; and
- Esplanade Reserve, legally described as Lot 2 Deposited Plan 18347 (CFR OT18A/955), having an area of 9279m^2.

CURRENT APPLICATION

The application seeks to change the layout of the subdivision as follows:

- The introduction of a cul-de-sac to replace a proposed right of way in favour of ten users.
- New Lot 105, to vest as road with Council, to facilitate future access to the land on the northeast if so needed.
- New Lots 108 and 110, being pedestrian links between the loop road and the cul-de-sac.
- New Lot 109, being the central island of the cul-de-sac.
- New Lot 111, being a pedestrian access to the Main South Railway Line rail corridor.
- New Lot 112, being a proposed access for Lot 1 DP 18209 (69 Gladstone Road North) to provide this existing property with legal access.

The revised layout will not create any additional residential lots over and above the 81 already consented, and will not create any residential sites smaller than minimum lot size.

The applicant also seeks to stage the subdivision into four stages in order to assist in the carrying out of the subdivision works. The staging will be as follows:

- Stage A ('Stage 1' within Council's system) will be a 'preliminary development stage' to create three new lots from the present 67 and 67A Gladstone Road North. Lot 103 will be a site of 4470m^2 containing the existing dwelling and curtilage of 67 Gladstone Road North. Lot 104 will be a vacant lot of 5170m^2 which is to be sold to the adjoining Brooklands Village. This lot will not be subject of an amalgamation condition although it will be a new lot with no legal access or frontage. Land use consent LUC-2014-323 has already been issued to address this temporary situation. The remaining land will become Lot 99, a site of 6.6075ha, to be sold to the developer. This will be a site with no legal access or frontage.

- Stage 1 ('Stage 2' within Council's system) will be the subdivision of new Lot 99 Stage A, 112 Hagart Alexander Drive, and the Esplanade Reserve to create residential lots, Lots 1 to 31; road to vest Lots 100 and 101; and Lot 102 which is to be a Stormwater Management Area. The balance land, Lot 98, will have an area of 3.8935ha.

- Stage 2 ('Stage 3' within Council's system) will be the subdivision of new Lot 98 Stage 1. It will create residential lots, Lots 32 to 56; Lots 105 and 106, to vest with Council as road or road reserve; a pedestrian accessway, Lot 108; and Lot 109, the central island within the cul-de-sac head. The balance land will be Lot 97, a site of 1.8530ha.

- Stage 3 ('Stage 4' within Council's system) will be the subdivision of new Lot 97 Stage 2 into residential lots, Lots 57 to 81; pedestrian accessways Lots 110 and 111; and an access lot, Lot 112, to be amalgamated with 69 Gladstone Road North.

The applicant also seeks to change the wording of a number of conditions for clarification purposes and to recognise the staging of the subdivision.

Consequential changes to the land use consent will be required in order to refer to the correct subdivision layout, and new Lot 99 with no legal access or frontage.

REASONS FOR APPLICATION

Section 127(1) of the Resource Management Act 1991 states:

The holder of a resource consent may apply to a consent authority for a change or cancellation of a condition of the consent (other than any condition as to the duration of the consent).

Section 127(3) of the Act states that *"Sections 88 to 121 apply, with all necessary modifications as if –*

a) the application were an application for a resource consent for a discretionary activity; and

b) the references to a resource consent and to the activity were references only to the change or cancellation of a condition and the effects of the change or cancellation respectively.

PLANNING ASSESSMENT

The survey plan for the subdivision has not yet been certified under section 223 or 224(c) of the Resource Management Act 1991. Accordingly, the Council is able to consider the application under section 127(1)(a) of the Resource Management Act 1991.

As stated in section 127(3)(a) of the Resource Management Act 1991, the application for the variation is a **discretionary activity**.

Affected Persons

Section 127(4) of the Act states that *"For the purposes of determining who is adversely affected by the change or cancellation, the local authority must consider, in particular, every person who –*

a) made a submission on the original application; and
b) may be affected by the change or cancellation."

The original application was processed on a limited notified basis, with the owners and occupiers of 110 and 114 Hagart Alexander Drive being considered affected parties to the subdivision proposal because of an introduction of a new road where there is currently a residential property. The consent was granted, and there were no appeals to the decision. This proposal does not change the situation of the new roading at Hagart Alexander Drive, nor will it extend the works of the subdivision beyond the already approved lapse period. Accordingly, these parties are not considered affected by the proposed variation. No other persons are considered to be adversely affected by this proposal for the reasons discussed below in the section on the effects on the environment.

ASSESSMENT OF EFFECTS ON THE ENVIRONMENT

Effects on the Environment

1. <u>Lot Size and Dimensions (18.6.1(g))</u>

   The proposed variation will not create any additional residential lots although there will be some variation in the way the lots are arranged and accessed. The road alignment will follow the same loop within the subject sites, with the access road intersecting with Hagart Alexander Drive in the same location and configuration. As such, the proposed variation is generally consistent with the original proposal, and has the same scale and nature.

   The most significant change is the introduction of a small cul-de-sac for access to the residential lots within the centre of the loop road rather than using rights of way for access. The new cul-de-sac will provide legal frontage to 13 lots, replacing the need for rights of way to serve these lots. None of the new residential lots will be smaller

than 500m^2 as a result of introducing the cul-de-sac. The central placement of the cul-de-sac will also allow two public walkways to be created between the loop road and the cul-de-sac, providing pedestrian linkages through the subdivision.

Lot 109 is to be a central island within the cul-de-sac head. This land is to be owned and managed by Council, but will not be vested as reserve.

Lot 105, against the northeast side boundary of the subject sites, has been included in the subdivision layout to satisfy condition 2(l) of SUB-2014-91 which states:

l) That an additional lot, Lot 105, shown in the vicinity of Lots 13 to 19, shall be shown on the plan as vesting with Council as road or road reserve. This lot shall extend the full width between the new road, Lot 100, and the northeast boundary shared with Lot 9 DP 254. The lot shall have a minimum width of 16.0m, and its position shall be approved by the Transportation Manager.

Lot 105 will have an area of 480m^2. While this is below minimum lot size for new sites in the Residential 1 zone, it is not proposed to be used as a residential lot but will serve as a 'special' allotment in that it is to be vested with Council as road reserve. This will facilitate a link to adjoining land on the northeast of the subject site if needed in the future.

A small lot, Lot 112, of 90m^2 is to be created and amalgamated with the land of 69 Gladstone Road North to create a leg-in for this existing property. This will provide 69 Gladstone Road North with legal access. At present, the property only has informal access over the railway line. Again, although there is an additional lot within the development, no residential site will fall below minimum lot size as a result.

Lot 99 will be created at Stage A and is to be sold to the developer. It will have no legal access or frontage, and as such, is a non-complying lot. This is a temporary situation which will be remedied at Stage 1 when the road access from Hagart-Alexander Drive is created. It is also an existing situation in that the present 67 and 67A Gladstone Road North have no legal access or frontage. As such, the creation of a landlocked Lot 99 is acceptable as it is expected to be a short-term situation and consent has already been granted to address this. Lot 103, containing the existing dwelling on-site, will be in a similar situation until right of way is created to link through to the new road of Stage 3. In the meantime, Lot 103 will continue to have access to the existing informal railway crossing.

Overall, the proposed variation is considered to be consistent with the original proposal, and will not create any new lots with unacceptable sizes or dimensions.

2. <u>Easements (18.6.1(i))</u>

The proposed variation in the layout will have few implications for easements. Existing easements will be treated the same as was discussed in the report (dated 19 November 2014) for the original proposal. New easements for rights of way and services will be created as necessary.

3. <u>Infrastructure (18.6.1(d), (e), (i), (j), (n), (o), and (p))</u>

The proposal has been reviewed by the Consents and Compliance Officer, Water and Waste Services Business Unit. She had no further comments to make beyond those of the original subdivision consent.

4. Transportation (18.6.1(c) & 10.8.18)

The Transportation Planner, Transportation, has visited the site and considered the application for revised proposal. The proposed variation involves internal changes to the layout of the subdivision, and introduces staging.

Much of the Transportation Planner's comments on the original proposal remains unchanged. In addition, the Transportation Planner notes that the variation will not change the new road connection to Hagart-Alexander Drive. Matters relating to the engineering design of the new road connection, and impacts on adjoining neighbours were resolved as part of the original consent. The applicant supports the retention of the original consent conditions relating to these matters.

Regarding the internal roading and accesses, the Transportation Planner notes that the proposed internal roading network can easily comply with the minimum requirements of Table 3.1R of the DCSD, and detailed design of the roading network can be adequately addressed via consent conditions. Specifically, Detailed engineering plans, showing the details of the construction of the proposed road, shall be submitted to and approved by the Group Manager Transportation prior to construction. Upon completion of construction of the new road, all works shall be tested to demonstrate that they meet the acceptance requirements of the DCC Code of Subdivision and Development. Upon completion of all of the roading works, the works shall be certified as having been constructed in accordance with the approved plans and specifications. These conditions should apply individually to each of Stages 1, 2, and 3.

The Transportation Planner identifies a key change to the revised proposal as being the introduction of a large type of cul-de-sac within Stage 2 of the development, which includes a "reserve" island. The "reserve" will not be vested as legal road, and splits the proposed road into two 8m wide (legal) corridors. A draft plan has been provided by the applicant which shows and indicative road formation. Transportation considers this to be acceptable, subject to the detailed design conditions mentioned above.

As noted within the application, a consent condition is recommended that the proposed bridge/culvert shall be designed such that routine maintenance is able to be undertaken on it without impeding the two-way vehicular road operating conditions.

There are several shared private accesses that are proposed within the site, being:

- Stage 1: Right of Way C; over Lot 25, in favour of Lots 19, 21, 22, and 26-29.
- Stage 2: Rights of Way D (over Lot 53, in favour of Lots 54 and 55); and F (over Lot 37, in favour of Lot 36).
- Stage 3: Right of Way E (over Lot 65, in favour of Lots 64, 66, and 103).

These private accesses shall be formed in accordance with the widths specified in Rule 20.5.7(v)(b) of the District Plan, and be hard surfaced and adequately drained for their duration.

Easements B1 and B2 are existing access and service easements over Lots 103 and 104 in favour of 69 Gladstone Road North. While these easements provide access to 69 Gladstone Road North, this site will be provided a new leg-in to the proposed Stage 3 Road. These existing these access easements will retain the existing physical access for that site until such time as the road connection is constructed. Transportation does not require anything further in relation to this matter.

Transportation had previously discussed with the applicant provision of a future access point to the Rural-zoned land to the east of the site, to help facilitate a cohesive road network should this land be rezoned and developed at a future point in time. Provisions for additional future accesses were also discussed at the hearing for the original application. This has resulted in some changes to the proposed subdivision, being

inclusion of Lot 105 to vest as road as part of Stage 2 (enabling a future road connection to the Rural zoned land to the east of the site), and an accessway (Lot 111) to the south of the site for a potential pedestrian/cycle connection over the Main South Line if this can be negotiated in the future. Transportation considers these provisions to be acceptable. It should be noted that the applicant will not be required to form Lots 105 or 111 as part of this consent.

Lots 108 and 110 are also provided as accessways through the site, which will have a legal width of 4.0m. It is noted that NZS4404:2010 recommends 5.5m legal width for accessways. CPTED principles for accessways are a key consideration for Transportation, and their design will therefore be closely assessed, in conjunction with fencing of neighbouring properties, in order to avoid "closed-in" corridors. This matter can be adequately dealt with as part of the detailed design requirements for the development.

Transportation has no issues with the proposed variation subject to changes of conditions as appropriate.

DECISION

SUB-2014-91/B

That pursuant to sections 34(A) and 127(1) of the Resource Management Act 1991 and after having regard to section 104 of the Act, the Dunedin City Council ***grants*** *consent to the discretionary activity of varying SUB-2014-91 for the subdivision of 67 & 67A Gladstone Road North, 112 Hagart Alexander Drive and Esplanade Reserve by staging the subdivision and substituting the plan with a revised plan which varies the layout of the subdivision, and accordingly SUB-2014-91 is amended to read as shown on the attached certificate.*

SUB-2014-323/A

That pursuant to sections 34(A) and 127(1) of the Resource Management Act 1991 and after having regard to section 104 of the Act, the Dunedin City Council grants consent to the discretionary activity of varying LUC-2014-323 to refer to a revised subdivision layout plan, and to give consent to the lack of legal access to Lots 99 and 103, and accordingly, LUC-2014-323 is amended to read as shown on the attached certificate.

LAPSING OF CONSENT

SUB-2014-91 has a lapse period of ten years, lapsing on 27 February 2025. SUB-2014-91/B seeks to stage the subdivision into three stages. It is usual Council practice to impose a five year lapse period of Stage 1 of staged subdivisions, and ten year lapse periods on subsequent stages (if so requested). The applicant's agent is agreeable to a five year lapse period for Stage 1. This will also include the preliminary stage, Stage A. Accordingly, **Stages A and 1 of SUB-2014-91/B** shall lapse on **27 February 2020**, five years after the issuing of SUB-2014-91, and **Stages 2 and 3** shall lapse on **27 February 2025**, ten years after the issuing of the original consent. LUC-2014-323 also has a ten year lapse period. This is considered sufficient considering it will actually address a temporary situation created at Stage A.

COMPLIANCE WITH CONDITIONS

It is the consent holder's responsibility to comply with any conditions imposed on their resource consent prior to and during (as applicable) exercising the resource consent. Failure to comply with the conditions may result in prosecution, the penalties for which are outlined in section 339 of the Resource Management Act 1991.

REASONS FOR DECISION

It is considered appropriate to amend the consent decision for the following reasons:

1. The revised layout of the subdivision does not create any additional residential sites, nor undersized residential sites. The new sites will all be of acceptable size and dimensions, and all will have adequate legal and physical access.

2. The proposed cul-de-sac is considered to be an acceptable option for access, and there are no other transportation matters of concern. The proposal takes into account the potential for future links through to the east and south boundaries.

RIGHTS OF OBJECTION

In accordance with section 357 of the Resource Management Act 1991, the consent holder may object to this decision or any condition within 15 working days of the decision being received, by applying in writing to the Dunedin City Council at the following address:

The Chief Executive
Dunedin City Council
P O Box 5045
Dunedin

Attn: Senior Planner – Enquiries Plaza, Ground Floor

Yours faithfully

Lianne Darby
PLANNER

Consent Type: Section 127 Variation of Conditions

Consent Number: SUB-2014-91/B (being a variation of the subdivision of SUB-2014-91) and LUC-2014-323/A (being a variation of land use consent LUC-2014-323).

SUB-2014-91/B

*That pursuant to sections 34(A) and 127(1) of the Resource Management Act 1991 and after having regard to section 104 of the Act, the Dunedin City Council **grants** consent to the discretionary activity of varying SUB-2014-91 for the subdivision of 67 & 67A Gladstone Road North, 112 Hagart Alexander Drive and Esplanade Reserve by staging the subdivision and substituting the plan with a revised plan which varies the layout of the subdivision.*

LUC-2014-323/A

*That pursuant to sections 34(A) and 127(1) of the Resource Management Act 1991 and after having regard to section 104 of the Act, the Dunedin City Council **grants** consent to the discretionary activity of varying LUC-2014-323 to refer to a revised subdivision layout plan and to give consent to the lack of legal access to Lots 99 and 103.*

The Amended Decision now reads:

Location of Activity: 67 & 67A Gladstone Road North, 112 Hagart-Alexander Drive, & Local Purpose Reserve (Esplanade), Mosgiel

Legal Description: Part Section 4 Block II East Taieri Survey District (CFR OT258/263 Ltd – Part Cancelled), Lot 1 Deposited Plan 18347 (CFR OT9C/1038), Lot 23 Deposited Plan 17999 (CFR OT13B/881), and part of Lot 2 Deposited Plan 18347 (CFR OT18A/955).

Lapse Date: SUB-2014-91/B: Stages A and 1: 27 February 2020, unless the consent has been given effect to before this date.
SUB-2014-91/B: Stages 2 and 3: 27 February 2025, unless the consent has been given effect to before this date.
LUC-2014-323/A: 27 February 2025, unless the consent has been given effect to before this date.

Subdivision SUB-2014-91 (as varied by SUB-2014-91/B)

*That pursuant to section 34A(1) and 104B, and after having regard to Part II matters and sections 104 and 104D of the Resource Management Act 1991, the Dunedin City Council **grants** consent to a **non-complying** activity being the subdivision of 67 and 67A Gladstone Road North, Mosgiel, being the sites legally described as Part Section 4 Block II East Taieri Survey District (CFR OT258/263 Ltd – Part Cancelled) and Lot 1 DP 18347 (CFR OT9C/1038) into ~~82~~ 81 residential lots, stormwater management lot, roading and balance land, with legal access to be obtained over 112 Hagart-Alexander Drive, legally described as Lot 23 DP 17999 (CFR OT13B/881) and Local Purpose Reserve (Esplanade), legally described as Lot 2 DP 18347 (CFR OT18A/955), subject to the conditions imposed under sections 108 and 220 of the Act, as follows:*

Stage A ('Stage 1' in Council's system): Subdivision of Part Section 4 Block II East Taieri Survey District (CFR OT258/263 Ltd – Part Cancelled) and Lot 1 DP 18347 (CFR OT9C/1038) into Lots 99, 103 and 104.

1. *The proposal shall be given effect to generally in accordance with the plan prepared by Paterson Pitts Group entitled, 'Owhiro Park Subdivision Layout Plan for Consent Variation – Stage A Subdivision Layout,' Revision E, dated 8 May 2015, and the accompanying information submitted as part of SUB-2014-91/B received at Council on 18 May 2015, except where modified by the following:*

2. *Prior to certification of the survey plan pursuant to section 223 of the Resource Management Act 1991, the applicant shall ensure the following:*

    a) *If a requirement for any easements for services is incurred during the survey then those easements shall be granted or reserved and included in a Memorandum of Easements on the survey plan.*

Stage 1 ('Stage 2' in Council's system): Subdivision of Lot 99 Stage A, Lot 23 Deposited Plan 17999 (CFR OT13B/881) and Lot 2 Deposited Plan 18347 (Esplanade Reserve - CFR OT18A/955) into Lots 1 to 31, Lots 100 and 101 (road to vest), Lot 102 (Stormwater Management Lot), and balance land Lot 98:

3. *The proposal shall be given effect to generally in accordance with the revised plan prepared by Paterson Pitts Group entitled, 'Owhiro Part Subdivision Layout Plan for Consent Variation – Stage 1 Subdivision Layout,' Revision E, dated 8 May 2015, ~~dated 1 May 2014, received at Council on 13 October 2014,~~ and the ~~accompanying~~ information submitted as part of SUB-2014-91 received by Council on 27 June 2014, and the further information received at Council on 18 December 2014 and the applicant's written right of reply received at Council on 12 February 2015, and the variation SUB-2014-91/B received at Council on 18 May 2015, except where modified by the following:*

4. *Prior to certification of the survey plan pursuant to section 223 of the Resource Management Act 1991, the applicant shall ensure the following:*

    a) *If a requirement for any easements for services is incurred during the survey then those easements shall be granted or reserved and included in a Memorandum of Easements on the survey plan.*

    b) *That the width of the future legal road between Hagart-Alexander Drive to the south side of the Owhiro Stream shall have a minimum width of 20.0m. This will be comprised of Local Purpose Reserve (Road) and road to vest.*

    c) *That the consent holder shall provide to the Council all documentation necessary to enable the portion of Local Purpose Reserve (Esplanade) to be reclassified as Local Purpose Reserve (Road) in order to achieve legal access to the development. This area shall be generally consistent with the land shown on the application plan as '(A) to become Local Road' except that a strip of Local Purpose Reserve (Esplanade) is to be maintained along the north-eastern edge next to 110 Hagart-Alexander Drive. This strip shall be at least 2.0m wide.*

    d) *That, if land of the present 112 Hagart-Alexander Drive is to be transferred to the owners of 114 Hagart-Alexander Drive, then an additional lot shall be shown on the plan between the present north-eastern side boundary of 114 Hagart-Alexander Drive and the new road. This lot shall be amalgamated with the land of 114 Hagart-Alexander Drive. The legal width of the new road shall not be narrower than 20.0m as a result of the transfer of land.*

e) That Right of Way C shall be duly created or reserved over new Lot ~~7~~ 25 in favour of Lots ~~5, 6, and 8 to 11~~ 19, 21, 22 & 26 - 29, and shall be shown on the plan in a Memorandum of Easements. It shall have a minimum legal width of 6.0m where serving four or more residences, and a minimum legal width of 3.5m where serving three or fewer residences.

~~*f) That Right of Way D shall be duly created or reserved over new Lot 21 in favour of Lot 20, and shall be shown in on the plan in a Memorandum of Easements. It shall have a minimum legal width of 3.5m.*~~

~~*g) That Rights of Way E and F shall be duly created or reserved over Lots 32 and 33 in favour of Lots 33 and 103, as appropriate, and shall be shown on the plan in a Memorandum of Easements. It shall have a minimum legal width of 6.0m.*~~

~~*h) That Right of Way G shall be duly created or reserved over new Lot 77 in favour of Lots 42, 73 to 76, and 78 to 81, and shall be shown on the plan in a Memorandum of Easements. It shall have a minimum legal width of 6.0m where serving four or more residences, and a minimum legal width of 3.5m where serving three or fewer residences.*~~

~~*i) That Right of Way H shall be duly created or reserved over new Lot 80 in favour of Lot 81, and shall be shown on the plan in a Memorandum of Easements. It shall have a minimum legal width of 3.5m.*~~

~~*j) That Right of Way J shall be duly created or reserved over new Lot 45 in favour of Lot 44, and shall be shown on the plan in a Memorandum of Easements. It shall have a minimum legal width of 3.5m.*~~

k) That Lots 100 and 101 shall be shown on the plan as vesting with Council as road.

~~*l) That an additional lot, Lot 105, shown in the vicinity of Lots 13 to 19, shall be shown on the plan as vesting with Council as road or road reserve. This lot shall extend the full width between the new road, Lot 100, and the northeast boundary shared with Lot 9 DP 254. The lot shall have a minimum width of 16.0m, and its position shall be approved by the Transportation Manager.*~~

m) That an easement in gross in favour of the Dunedin City Council shall be duly created or reserved over any servicing infrastructure (water, stormwater or wastewater) to be vested with Council which is located within privately owned property, and shall be shown on the plan in a Memorandum of Easements in Gross. The easements shall be made in accordance with the relevant section/s of the Dunedin Code of Subdivision and Development 2010.

n) That any easements for drainage to pass over the Local Purpose Reserve (Esplanade) shall be first approved by the Group Manager, Parks, Recreation and Aquatics.

5. *Prior to certification pursuant to section 224(c) of the Resource Management Act 1991, the applicant shall complete the following:*

a) The subdividing owner of the land shall provide a letter to the Council advising who their representative shall be for the design and execution of the engineering works required in association with this subdivision and shall confirm that this representative will be responsible for all aspects of the works covered under NZS4404:2004 "Code of Practice for Urban Land Subdivision" in relation to this development.

Pre-Construction

b) *That a site specific geotechnical investigation of the entire subject site (Stages 1, 2 and 3) be undertaken by an appropriately qualified person to determine the potential for amplified movements and liquefaction of soils during significant seismic events. Dynamic cone testing to 10m depth is recommended to classify the potential for liquefaction for each dwelling. The report shall determine whether specifically designed ground improvements works are required. These shall be addressed through the earthworks phase of the project which will require additional resource consent.*

c) *The consent holder shall provide detailed engineering plans and associated calculations of how the subdivision is to be serviced for water, stormwater and wastewater to the Asset Planning Engineer, Water and Waste Services Business Unit, for approval prior to any works commencing on-site. The engineering plans and associated calculations shall meet the requirements of the Construction Plan Check List.*

d) *Prior to the commencement of any construction on site, the consent holder shall submit for the approval of the Parks Officer a detailed landscape plan for the southern bank of the Owhiro Stream (local purpose esplanade reserve). This plan shall include plant species and the proposed construction details for the walking track.*

Construction Period

e) *That the property owners of 110 and 114 Hagart-Alexander Drive shall be notified in writing at least 10 days prior to construction works commencing on the removal of the house of 112 Hagart-Alexander Drive and again prior to the construction commencing of the new road between Hagart-Alexander Drive and the Owhiro Stream. The letters shall contain information on the general time frames expected for the works.*

f) *All construction work on the site shall be designed and conducted to ensure that construction noise does not exceed the noise limits in the following table.*

Time of Week	*Time Period*	*Leq (dBA)*	*L max(dBA)*
Weekdays	*0730-1800*	*75*	*90*
	1800-2000	*70*	*85*
	2000-0730	*45*	*75*
Saturdays	*0730-1800*	*75*	*90*
	1800-2000	*45*	*75*
	2000-0730	*45*	*75*
Sundays and public holidays	*0730-1800*	*55*	*85*
	1800-2000	*45*	*75*

Sound levels shall be measured and assessed in accordance with the provisions of NZS 6803: 1999 Acoustics – Construction noise. Please Note: the lower noise limits on Sundays and Public Holidays may mean that no construction work can occur on these days.

Water Supply

g) *An "Application for Water Supply – New Service" shall be submitted to the Water and Waste Services Business Unit for approval to establish new*

water connections to each unserviced residential lot. Details of how each new lot is to be serviced for water shall accompany the application.

h) Upon approval by the Water and Waste Services Business Unit, water service connections shall be installed in accordance with the requirements of Section 6.6.2 of the Dunedin Code of Subdivision and Development 2010.

Stormwater Services

i) A Stormwater Management Plan for the entire subdivision (Stages 1, 2 and 3) shall be provided to the Water and Waste Services Manager for approval prior to works commencing. The Stormwater Management Plan shall outline how stormwater from the subdivision will be managed to ensure post-development flows do not exceed pre-development flows, and identify and address any downstream effects of the stormwater generated by the development, including any mitigation required.

j) The stormwater management for Stage 1 of the subdivision shall be undertaken in accordance with the approved Stormwater Management Plan. Either:

- *a consent notice shall be prepared requiring on-site retention tanks to be installed on each new lot. The consent notice shall read as follows in condition ~~3(k)~~ 5(k); or*
- *A stormwater retention system which caters for all the lots shall be built on Lot 102. This could be in the form of a retention pond or similar. The details of any combined stormwater retention system shall be approved by the Water and Waste Services Business Unit.*

k) That, if using individual on-site stormwater retention, a consent notice shall be prepared for registration on the residential lots for the following on-going condition:

> *'Prior to residential activity being established on this site, a stormwater retention tank, to retain all stormwater run-off from roof and any hard stand area surface, shall be installed. The tank shall have a minimum storage capacity of 3000 litres, or another volume as agreed with the Water and Waste Services Business Unit at the Dunedin City Council. Primary discharge shall be through a restricted aperture located near the invert of the tank, which shall be specifically designed to pass 0.5 litres per second. Secondary discharge shall be by way of a standard 100mm diameter drain installed at the top of the tank which shall provide an escape route for water during extreme rainfall events.'*

Foul Sewer Services

l) That all wastewater infrastructure for Stage 1 shall be installed in accordance with Section 5 of the Dunedin Code of Subdivision and Development 2010, unless specifically authorised by the Network Engineer, Water and Waste Services Business Unit.

Erosion and Sediment Control

m) That all practicable measures shall be used to mitigate erosion and to control and contain sediment-laden stormwater run-off from the site during any stages of site disturbance that may be associated with this subdivision.

Transportation

n) Detailed engineering plans, including cross sections, showing the details of the construction of the new road (Design A, as submitted in the further information received at Council on 18 December 2014) shall be submitted to, and approved by, the Group Manager Transportation, in consultation with the Group Manager Parks, Recreation and Aquatics, prior to construction.

o) If the property owners of 114 Hagart-Alexander Drive desire to relocate their vehicle entrance to the new road, the consent holder shall install a compliant access between the carriageway of the new road and the existing property boundary of 114 Hagart-Alexander Drive at the consent holder's expense. The existing Hagart-Alexander Drive access to the property shall also be reinstated as kerb and channel and grass up to the edge of the footpath, at the consent holder's expense. The consent holder is not responsible for internal alterations to the layout of the property which might be undertaken.

p) Detailed design of the road intersection of Hagart-Alexander Drive and the new road shall be carried out by a suitably qualified engineer, and shall ensure all safety and efficiency matters are adequately addressed.

q) The proposed bridge or culvert shall be designed so that routine maintenance is able to be undertaken on it without impeding the two-way vehicular road operating conditions.

r) Vegetation with a maximum height of 2.0m shall be established within the new legal road between 110 and 114 Hagart-Alexander Drive. Details of the proposed vegetation shall be submitted to the Resource Consents Manager for approval prior to planting commencing.

s) Upon completion of construction of the new road, all works shall be tested to demonstrate that they meet the acceptance requirements of the Dunedin Code of Subdivision and Development 2010.

t) ~~All private accesses~~ Right of Way C shall be formed in accordance with the widths specified in Rule 20.5.7(v)(b) of the District Plan, and be hard surfaced and adequately drained for ~~their~~ its duration.

Urban Landscape Conservation Area Development

u) That the enhancement of the urban landscape conservation area shall be undertaken in accordance with the approved plans of condition ~~3(d)~~ 5(d) above.

v) Any physical works within the reserve area, except for work required to install the new access road shall be undertaken after the completion of the bulk earthworks. This is to ensure the existing vegetation within the reserve is available as a means of sediment control to protect the stream. (Note: the vegetation should not be relied upon as the significant form of sediment control during the earthworks).

w) Prior to the construction of the access road, the consent holder shall submit for the approval of the Parks Officer a landscape and maintenance plan for vegetation on each side of the new road. All landscaping shall be implemented in accordance with the approved plan. The consent holder is expected to maintain the vegetation for a period of five years.

x) The consent holder shall pay Council a $2000 bond for the on-going maintenance over a five year period of the roadside vegetation of condition ~~3(r)~~ 5(r) above. The bond will also cover any requirement to replace sick or dying plants.

y) Prior to the commencement of any works on site the consent holder shall submit for the approval of the Parks Officer an erosion and sediment control plan. The plan should demonstrate how the esplanade reserve shall be protected during the earthworks for the project. (Note: this condition is specific to the protection of the esplanade reserve. A more complete plan may be required for other aspects of the development).

z) Prior to the construction of the access road from Hagart-Alexander Drive to the proposed development the consent holder shall submit a plan for the approval of the parks officer showing the access points to all four areas of local purpose esplanade reserve adjoining the access road. The access points shall be a minimum of 2.0m in width and the design shall be suitable for maintenance vehicles and pedestrians.

aa) Prior to the submission of any drainage plans the consent holder must seek the approval of the Parks, Recreation and Aquatics Department for any drains that are proposed to cross the adjacent reserve. Appropriate legal instruments will be required for any drains that cross the reserve. The consent holder shall be responsible for all costs associated with the preparation of the documentation.

General

bb) That prior to construction works commencing on the new road to the development, acoustic fencing shall be attached to the outer side of the existing fencing of 110 and 114 Hagart-Alexander Drive. The fencing shall be at least as high as the existing fence, but shall be no higher than 2.0m unless the property owners seek a higher fence and resource consent is obtained. Alternatively, if the property owners want a fence of a different design along their boundaries, the consent holder shall contribute to the cost of a new fence of any design up to the value of the acoustic fencing which it is replacing.

~~*cc) That a 1.8m high fence shall be constructed along the railway edge of the subdivision up to the southeast corner of Lot 103 to prevent pedestrians crossing the railway line. The fence shall extend along the northeast boundary of Lot 20, and along the northeast boundary of Lot 103 for at least 50.0m.*~~

dd) That vehicle access shall be formed between Lot 100 (road to vest) and Brooklands Village, to be utilised only in emergencies. A removable barrier or gate shall be erected to prevent casual through-traffic.

ee) That a consent notice shall be registered on the titles of those lots affected by the access of condition ~~3(dd)~~ 5(dd) above, for the following on-going condition:

> *'Vehicle access through this property shall be made available for emergency services and all residents of Brooklands Village and/or the residential lots of ~~DP ...,~~ [insert name of new road of subdivision] if either Balmoral Avenue or [insert name of new road to subdivision] is blocked because of a natural hazard (such as flooding) or an emergency. This access is only to be used during the period of the blockage.'*

ff) That a consent notice shall be registered on the titles of those lots abutting the esplanade reserve for the following on-going conditions:

> *'All stormwater from the site shall be captured and disposed of to an approved drain. No stormwater is to be drained onto the Council reserve.'*
>
> *'The costs of fencing on any boundary shared with Council shall be met by the property owner.'*
>
> *'All fencing on the reserve boundary shall be restricted to a maximum of 1.2 metres in height or 1.8 metres in height with 40% permeability.'*

~~*gg) That a consent notice be prepared for registration on the titles of Lots 20 to 33 for the following on-going condition:*~~

> ~~*'All buildings, balconies and decks on this site shall be set back from the boundary with the railway corridor by a minimum of 10.0m.'*~~
>
> ~~*'Buildings shall be designed, constructed and maintained to ensure the following internal design noise limits are not exceeded, and shall take into account future use of the Main South Railway Line by the addition of 3dB to existing measured or calculated sound levels.'*~~

~~**Receiving Environment (New, relocated or altered)**~~	~~**Criterion**~~
~~*Residential – Bedrooms*~~	~~$35\ dB_{LAeq,\ 1\ hour}$~~
~~*Residential – Habitable Spaces*~~	~~$40\ dB_{LAeq,\ 1\ hour}$~~
~~*Primary Outdoor Amenity Areas*~~	~~$60\ dB_{LAeq,\ 1\ hour}$~~

> ~~*'Where it is necessary to have windows closed to achieve the acoustic design requirements above, an alternative ventilation system shall be installed to provide thermal comfort. To achieve thermal comfort, the following requirements for a ventilation system are recommended:*~~

- ~~*A quantity of air shall be provided to achieve the requirements of Clause G4 of the New Zealand Building Code. At the same time as meeting this requirement, the sound of the system shall not exceed 30dB LAeq(30s) when measured 1.0m away from any grille or diffuser.*~~
- ~~*Either: air conditioning shall be provided; or a high air flow rate setting shall provide at least 15 air changes per hour (ACH) in the principal living space and at least 5 CH in all other habitable spaces.*~~
- ~~*At the same time as meeting the above requirement in b), the sound of the system shall not exceed 40dB LA31(30s) in the principal living space and 35dB LAeq(e0s) in all other habitable spaces, when measured 1.0m away from any grille or diffuser.*~~
- ~~*The internal air pressure shall be no more than 10 Pa above ambient air pressure due to the mechanical ventilation.*~~
- ~~*Where a high air flow rate setting is provided, the system shall be controllable by the occupants to be able to alter the ventilation rate with at least three equal stages up to the high setting.*~~

~~*'Any new building developed for a noise sensitive activity within these sites shall comply with Class C vibration limits in NS 8176E:2005.'*~~

~~*'The property owner shall recognise that the property is located adjacent to the Main South Line. The lawful operation of this railway line may result in the occupier experiencing noise and vibration effects. The owners of the land acknowledge that these effects are typical of living near the Main South Line and will not therefore make complaints to the Dunedin City Council or any other party concerning such effects arising from the lawful operation of the Main South Line.'*~~

hh) The subdivider shall provide to Council 'as-built' plans and information detailing all engineering works completed in relation to or in association with this subdivision.

Such "as-built" plans of:

(i) the water reticulation pipes laid within the subdivision shall include the locations of hydrants, valves, pipelines, service connections and manifold box installations and details of the pipeline materials and depth of cover over the pipelines. Written confirmation shall also be given that only approved materials have been used in the construction of the water reticulation in the subdivision.

(ii) the foul and stormwater system shall show laterals for each lot.

Stage 2 ('Stage 3' in Council's system): Subdivision of Lot 98 Stage 1 into Lots 32 to 56, Lot 105 (road reserve to vest), Lot 106 (road to vest), Lot 108 (pedestrian walkway), Lot 109 (cul-de-sac island), and balance land Lot 97:

6. *The proposal shall be given effect to generally in accordance with the revised plan prepared by Paterson Pitts Group entitled, 'Owhiro Part Subdivision Layout Plan for Consent Variation – Stage 2 Subdivision Layout,' dated 8 May 2015, and the information submitted as part of SUB-2014-91 received by Council on 27 June 2014, and the further information received at Council on 18 December 2014 and the applicant's written right of reply received at Council on 12 February 2015, and the variation SUB-2014-91/B received at Council on 18 May 2015, except where modified by the following:*

7. *Prior to certification of the survey plan pursuant to section 223 of the Resource Management Act 1991, the applicant shall ensure the following:*

a) If a requirement for any easements for services is incurred during the survey then those easements shall be granted or reserved and included in a Memorandum of Easements on the survey plan.

b) That Right of Way D shall be duly created or reserved over Lot 53 in favour of Lots 54 and 55, and shall be shown on the survey plan in a Memorandum of Easements. Right of Way D shall have a minimum legal width of 3.5m.

c) That Right of Way F shall be duly created or reserved over Lot 37 in favour of Lot 36, and shall be shown on the survey plan in a Memorandum of Easements. Right of Way F shall have a minimum legal width of 3.5m.

d) That Lot 106 shall be shown on the plan as vesting with Council as road. It shall have a minimum width of 16.0m.

e) *That Lot 108 shall vest with Council as accessway. Its width shall be determined in consultation with Transportation.*

f) *That Lot 105 shall be shonw on the plan as vesting with Council as local purpose reserve (road). It shall have a minimum width of 16.0m.*

8. *Prior to certification pursuant to section 224(c) of the Resource Management Act 1991, the applicant shall complete the following:*

a) *The subdividing owner of the land shall provide a letter to the Council advising who their representative shall be for the design and execution of the engineering works required in association with this subdivision and shall confirm that this representative will be responsible for all aspects of the works covered under NZS4404:2004 "Code of Practice for Urban Land Subdivision" in relation to this development.*

Construction Period

b) *All construction work on the site shall be designed and conducted to ensure that construction noise does not exceed the noise limits in the following table.*

Time of Week	*Time Period*	*Leq (dBA)*	*L max(dBA)*
Weekdays	*0730-1800*	*75*	*90*
	1800-2000	*70*	*85*
	2000-0730	*45*	*75*
Saturdays	*0730-1800*	*75*	*90*
	1800-2000	*45*	*75*
	2000-0730	*45*	*75*
Sundays and public holidays	*0730-1800*	*55*	*85*
	1800-2000	*45*	*75*

Sound levels shall be measured and assessed in accordance with the provisions of NZS 6803: 1999 Acoustics – Construction noise. Please Note: the lower noise limits on Sundays and Public Holidays may mean that no construction work can occur on these days.

Water Supply

c) *An "Application for Water Supply – New Service" shall be submitted to the Water and Waste Services Business Unit for approval to establish new water connections to each unserviced residential lot. Details of how each new lot is to be serviced for water shall accompany the application.*

d) *Upon approval by the Water and Waste Services Business Unit, water service connections shall be installed in accordance with the requirements of Section 6.6.2 of the Dunedin Code of Subdivision and Development 2010.*

Stormwater Services

e) *The stormwater management for Stage 2 of the subdivision shall be undertaken in accordance with the approved Stormwater Management Plan of condition 5(i) above. If individual on-site stormwater retention is to be installed on each new lot, a consent notice shall be prepared for registration on the title of Lots 32 to 56 for the following on-going condition:*

'Prior to residential activity being established on this site, a stormwater retention tank, to retain all stormwater run-off from roof and any hard stand area surface, shall be installed. The tank shall have a minimum storage capacity of 3000 litres, or another volume as agreed with the Water and Waste Services Business Unit at the Dunedin City Council. Primary discharge shall be through a restricted aperture located near the invert of the tank, which shall be specifically designed to pass 0.5 litres per second. Secondary discharge shall be by way of a standard 100mm diameter drain installed at the top of the tank which shall provide an escape route for water during extreme rainfall events.'

Foul Sewer Services

f) That all wastewater infrastructure for Stage 2 shall be installed in accordance with Section 5 of the Dunedin Code of Subdivision and Development 2010, unless specifically authorised by the Network Engineer, Water and Waste Services Business Unit.

Erosion and Sediment Control

g) That all practicable measures shall be used to mitigate erosion and to control and contain sediment-laden stormwater run-off from the site during any stages of site disturbance that may be associated with this subdivision.

Transportation

h) Detailed engineering plans, including cross sections, showing the details of the construction of the new roading within Lot 106 shall be submitted to, and approved by, the Group Manager Transportation, in consultation with the Group Manager Parks, Recreation and Aquatics, prior to construction.

i) Upon completion of construction of the new road, all works shall be tested to demonstrate that they meet the acceptance requirements of the Dunedin Code of Subdivision and Development 2010.

j) Rights of Way D and F shall be formed to a minimum width of 3.0m, and be hard surfaced and adequately drained for their duration.

k) Lot 108 shall be formed in accordance with the widths specified in Rule 20.5.7(v)(b) of the District Plan, and be hard surfaced and adequately drained.

l) That detailed design of the landscaping for Lot 109 and an implementation plan shall be submitted to the Council for approval prior to works on Lot 109 commencing. The landscaping shall incorporate the following features:

- *The entire lot, excepting hard surfaced areas, shall be planted in shrubbery or small trees;*
- *There shall be no chain link fencing or any other barrier erected;*
- *There shall be no grass lawn;*
- *Pathways within Lot 109 shall be hard surfaced.*

m) The landscaping of Lot 109 shall be established in accordance with the approved design and implementation plan of condition 8(l) above at the consent holder's expense.

n) A bond of $5000 shall be paid to Council to cover a 12 month maintenance period for the landscaping of Lot 109, commencing from the signing of s224(c) for this stage.

General

o) *That a 1.8m high fence shall be constructed along the railway boundary of Lots 53 to 56 to prevent pedestrians crossing the railway line. The fence shall also extend along the northeast boundary of Lot 53 for at least 50.0m.*

p) *That a consent notice be prepared for registration on the titles of Lots 53 to 56 for the following on-going condition:*

'All buildings, balconies and decks on this site shall be set back from the boundary with the railway corridor by a minimum of 10.0m.'

'Buildings shall be designed, constructed and maintained to ensure the following internal design noise limits are not exceeded, and shall take into account future use of the Main South Railway Line by the addition of 3dB to existing measured or calculated sound levels.'

Receiving Environment (New, relocated or altered)	***Criterion***
Residential - Bedrooms	*35 $dB_{LAeq,\ 1\ hour}$*
Residential – Habitable Spaces	*40 $dB_{LAeq,\ 1\ hour}$*
Primary Outdoor Amenity Areas	*60 $dB_{LAeq,\ 1\ hour}$*

'Where it is necessary to have windows closed to achieve the acoustic design requirements above, an alternative ventilation system shall be installed to provide thermal comfort. To achieve thermal comfort, the following requirements for a ventilation system are recommended:

- *A quantity of air shall be provided to achieve the requirements of Clause G4 of the New Zealand Building Code. At the same time as meeting this requirement, the sound of the system shall not exceed 30dB LAeq(30s) when measured 1.0m away from any grille or diffuser.*
- *Either: air conditioning shall be provided; or a high air flow rate setting shall provide at least 15 air changes per hour (ACH) in the principal living space and at least 5 CH in all other habitable spaces.*
- *At the same time as meeting the above requirement in b), the sound of the system shall not exceed 40dB LA31(30s) in the principal living space and 35dB LAeq(e0s) in all other habitable spaces, when measured 1.0m away from any grille or diffuser.*
- *The internal air pressure shall be no more than 10 Pa above ambient air pressure due to the mechanical ventilation.*
- *Where a high air flow rate setting is provided, the system shall be controllable by the occupants to be able to alter the ventilation rate with at least three equal stages up to the high setting.*

'Any new building developed for a noise sensitive activity within these sites shall comply with Class C vibration limits in NS 8176E:2005.'

'These conditions specified in this consent notice do not apply to non-residential, unattached structures (such as garages and sheds) which may be erected within the stated set back area.'

'The property owner shall recognise that the property is located adjacent to the Main South Line. The lawful operation of this railway line may result in the occupier experiencing noise and vibration effects. The owners of the land acknowledge that these effects are typical of living near the Main South Line and will not therefore make complaints to the Dunedin City Council or any other party concerning such effects arising from the lawful operation of the Main South Line.'

q) *The subdivider shall provide to Council 'as-built' plans and information detailing all engineering works completed in relation to or in association with this subdivision.*

Such "as-built" plans of:

(i) *the water reticulation pipes laid within the subdivision shall include the locations of hydrants, valves, pipelines, service connections and manifold box installations and details of the pipeline materials and depth of cover over the pipelines. Written confirmation shall also be given that only approved materials have been used in the construction of the water reticulation in the subdivision.*

(ii) *the foul and stormwater system shall show laterals for each lot.*

Stage 3 ('Stage 4' in Council's system): Subdivision of Lot 97 Stage 2 into Lots 57 to 81, Lot 107 (road to vest), Lots 110 & 111 (pedestrian walkway) and Lot 112 (access leg-in):

9. *The proposal shall be given effect to generally in accordance with the revised plan prepared by Paterson Pitts Group entitled, 'Owhiro Part Subdivision Layout Plan for Consent Variation – Stage 3 Subdivision Layout,' dated 8 May 2015, and the information submitted as part of SUB-2014-91 received by Council on 27 June 2014, and the further information received at Council on 18 December 2014 and the applicant's written right of reply received at Council on 12 February 2015, and the variation SUB-2014-91/B received at Council on 18 May 2015, except where modified by the following:*

10. *Prior to certification of the survey plan pursuant to section 223 of the Resource Management Act 1991, the applicant shall ensure the following:*

a) *If a requirement for any easements for services is incurred during the survey then those easements shall be granted or reserved and included in a Memorandum of Easements on the survey plan.*

b) *That Right of Way E shall be duly created or reserved over new Lot 65 in favour of Lots 64, 66 and 103 (Stage A), and shall be shown on the plan in a Memorandum of Easements. It shall have a minimum legal width of 6.0m where serving four or more residences, and a minimum legal width of 3.5m where serving three or fewer residences.*

c) *That Lot 107 shall be shown on the plan as vesting with Council as road. It shall have a minimum legal width of 16.0m.*

d) *That Lots 110 and 111 shall be shown on the plan as access ways. Their legal widths shall be determined in consultation with Transportation.*

e) *That Lot 112 shall be shown on the plan as being at least 4.5m wide.*

f) *That the following amalgamation condition shall be shown on the survey plan:*

'That Lot 112 hereon shall be transferred to the owners of Lot 1 DP 18209 (CFR OT9A/1245), and that one computer freehold register be issued to include both parcels (See CSN Request 1292834).'

11. *Prior to certification pursuant to section 224(c) of the Resource Management Act 1991, the applicant shall complete the following:*

a) *The subdividing owner of the land shall provide a letter to the Council advising who their representative shall be for the design and execution of the engineering works required in association with this subdivision and shall confirm that this representative will be responsible for all aspects of the works covered under NZS4404:2004 "Code of Practice for Urban Land Subdivision" in relation to this development.*

Construction Period

b) *All construction work on the site shall be designed and conducted to ensure that construction noise does not exceed the noise limits in the following table.*

Time of Week	*Time Period*	*Leq (dBA)*	*L max(dBA)*
Weekdays	*0730-1800*	*75*	*90*
	1800-2000	*70*	*85*
	2000-0730	*45*	*75*
Saturdays	*0730-1800*	*75*	*90*
	1800-2000	*45*	*75*
	2000-0730	*45*	*75*
Sundays and public holidays	*0730-1800*	*55*	*85*
	1800-2000	*45*	*75*

Sound levels shall be measured and assessed in accordance with the provisions of NZS 6803: 1999 Acoustics – Construction noise. Please Note: the lower noise limits on Sundays and Public Holidays may mean that no construction work can occur on these days.

Water Supply

c) *An "Application for Water Supply – New Service" shall be submitted to the Water and Waste Services Business Unit for approval to establish new water connections to each unserviced residential lot. Details of how each new lot is to be serviced for water shall accompany the application.*

d) *Upon approval by the Water and Waste Services Business Unit, water service connections shall be installed in accordance with the requirements of Section 6.6.2 of the Dunedin Code of Subdivision and Development 2010.*

e) *The stormwater management for Stage 3 of the subdivision shall be undertaken in accordance with the approved Stormwater Management Plan of condition 5(i) above. If individual on-site stormwater retention is to be installed on each new lot, a consent notice shall be prepared for registration on the title of Lots 57 to 81 for the following on-going condition:*

'Prior to residential activity being established on this site, a stormwater retention tank, to retain all stormwater run-off from roof and any hard stand area surface, shall be installed.

The tank shall have a minimum storage capacity of 3000 litres, or another volume as agreed with the Water and Waste Services Business Unit at the Dunedin City Council. Primary discharge shall be through a restricted aperture located near the invert of the tank, which shall be specifically designed to pass 0.5 litres per second. Secondary discharge shall be by way of a standard 100mm diameter drain installed at the top of the tank which shall provide an escape route for water during extreme rainfall events.'

Foul Sewer Services

f) That all wastewater infrastructure for Stage 3 shall be installed in accordance with Section 5 of the Dunedin Code of Subdivision and Development 2010, unless specifically authorised by the Network Engineer, Water and Waste Services Business Unit.

Erosion and Sediment Control

g) That all practicable measures shall be used to mitigate erosion and to control and contain sediment-laden stormwater run-off from the site during any stages of site disturbance that may be associated with this subdivision.

Transportation

h) Detailed engineering plans, including cross sections, showing the details of the construction of the new roading within Lot 107 shall be submitted to, and approved by, the Group Manager Transportation, in consultation with the Group Manager Parks, Recreation and Aquatics, prior to construction.

i) Upon completion of construction of the new road, all works shall be tested to demonstrate that they meet the acceptance requirements of the Dunedin Code of Subdivision and Development 2010.

j) Right of Way E shall be formed to a minimum width of 4.5m where serving four or more residential units, and 3.0m where serving three or fewer residential units, and be hard surfaced and adequately drained for its duration.

k) Lot 110 shall be formed in accordance with the widths specified in Rule 20.5.7(v)(b) of the District Plan, and be hard surfaced and adequately drained.

General

l) That a 1.8m high fence shall be constructed along the railway boundary of Lots 57 to 65, and including Lot 111 (i.e. there shall be no gap in fencing along the full length of the railway boundary of the entire subdivision), to prevent pedestrians crossing the railway line. The fence shall also extend along the southwest boundary of Lot 65 up to the right of way to Lot 103.

m) That a consent notice be prepared for registration on the titles of Lots 57 to 65 for the following on-going condition:

'All buildings, balconies and decks on this site shall be set back from the boundary with the railway corridor by a minimum of 10.0m.'

'Buildings shall be designed, constructed and maintained to ensure the following internal design noise limits are not exceeded, and shall take into account future use of the Main

South Railway Line by the addition of 3dB to existing measured or calculated sound levels.'

Receiving Environment (New, relocated or altered)	***Criterion***
Residential - Bedrooms	*35 $dB_{LAeq, 1 hour}$*
Residential – Habitable Spaces	*40 $dB_{LAeq, 1 hour}$*
Primary Outdoor Amenity Areas	*60 $dB_{LAeq, 1 hour}$*

'Where it is necessary to have windows closed to achieve the acoustic design requirements above, an alternative ventilation system shall be installed to provide thermal comfort. To achieve thermal comfort, the following requirements for a ventilation system are recommended:

- *A quantity of air shall be provided to achieve the requirements of Clause G4 of the New Zealand Building Code. At the same time as meeting this requirement, the sound of the system shall not exceed 30dB LAeq(30s) when measured 1.0m away from any grille or diffuser.*
- *Either: air conditioning shall be provided; or a high air flow rate setting shall provide at least 15 air changes per hour (ACH) in the principal living space and at least 5 CH in all other habitable spaces.*
- *At the same time as meeting the above requirement in b), the sound of the system shall not exceed 40dB LA31(30s) in the principal living space and 35dB LAeq(e0s) in all other habitable spaces, when measured 1.0m away from any grille or diffuser.*
- *The internal air pressure shall be no more than 10 Pa above ambient air pressure due to the mechanical ventilation.*
- *Where a high air flow rate setting is provided, the system shall be controllable by the occupants to be able to alter the ventilation rate with at least three equal stages up to the high setting.*

'Any new building developed for a noise sensitive activity within these sites shall comply with Class C vibration limits in NS 8176E:2005.'

'These conditions specified in this consent notice do not apply to non-residential, unattached structures (such as garages and sheds) which may be erected within the stated set back area.'

'The property owner shall recognise that the property is located adjacent to the Main South Line. The lawful operation of this railway line may result in the occupier experiencing noise and vibration effects. The owners of the land acknowledge that these effects are typical of living near the Main South Line and will not therefore make complaints to the Dunedin City Council or any other party concerning such effects arising from the lawful operation of the Main South Line.'

n) *The subdivider shall provide to Council 'as-built' plans and information detailing all engineering works completed in relation to or in association with this subdivision.*

Such "as-built" plans of:

(i) *the water reticulation pipes laid within the subdivision shall include the locations of hydrants, valves, pipelines, service*

connections and manifold box installations and details of the pipeline materials and depth of cover over the pipelines. Written confirmation shall also be given that only approved materials have been used in the construction of the water reticulation in the subdivision.

(ii) the foul and stormwater system shall show laterals for each lot.

Land Use LUC-2014-323 (as varied by LUC-2014-323/A)

That pursuant to section 34A(1) and 104C and after having regard to section 104 of the Resource Management Act 1991, the Dunedin City Council ***grants*** *consent to a* ***restricted discretionary*** *activity being the creation of ~~a~~ new lots with no access or frontage to legal road at ~~Lot 104 SUB 2014 91~~ Lots 99, 103 and 104 SUB-2014-91/B, ~~part of~~ at 67 and 67A Gladstone Road North, Mosgiel, subject to conditions imposed under section 108 of the Act as follows:*

a) *The proposal shall be given effect to generally in accordance with the revised plan prepared by Paterson Pitts Group entitled, 'Owhiro Park Subdivision Layout Plan Overall Subdivision Layout,' and the ~~accompanying~~ information submitted as part of LUC-2014-323 received by Council on 17 June 2014, and the information submitted as part of the variation LUC-2014-323/A received by Council on 18 May 2015, except where modified by the following:*

b) *That a covenant holding Lot 104 with an adjoining title having physical and legal access shall be entered into between the developer and the Council prior to the completion of Stage 1 of SUB-2014-91/B.*

c) *That compliant legal vehicle access shall be provided for Lot 103 to Lot 107 at the time of Stage 3 SUB-2014-91/B.*

d) *Lot 99 shall not be used for residential purposes until such time as either legal and practical access is established to this lot, or Lot 99 is held with an adjoining property having legal and practical access, and until such time as Lot 99 is provided with adequate water supply and drainage.*

Advice Notes

1. In addition to the conditions of a resource consent, the Resource Management Act establishes through sections 16 and 17 a duty for all persons to avoid unreasonable noise, and to avoid, remedy or mitigate any adverse effect created from an activity they undertake. A similar responsibility exists under the Health Act 1956.

2. The lapse period specified above may be extended on application to the Council pursuant to section 125 of the Resource Management Act 1991.

3. It is the consent holder's responsibility to comply with any conditions imposed on their resource consent prior to and during (as applicable) exercising the resource consent. Failure to comply with the conditions may result in prosecution, the penalties for which are outlined in section 339 of the Resource Management Act 1991.

4. This is resource consent. Please contact the Building Control Office, Development Services, about the need for building consent for any construction work as part of the subdivision.

5. The Water and Waste Services Business Unit require that the installation and connection of new water reticulation to the existing public water system shall be carried out after the consent holder has completed and submitted an 'Application for Water Supply' form to the Council and following the consent holder's acceptance of the quote for the required work (as per the Dunedin City Council's Terms and

Conditions for the Supply of Water and the Dunedin City Council Code of Subdivision (Part 4)). A quote for the required work must be obtained from an approved water supply connection installer (AWSCI). The list of AWSCI's, application form and the full process can be found here http://www.dunedin.govt.nz/services/water-supply/new-water-connections.

6. The consent holder is to ensure that all practicable measures are used to mitigate erosion and to control and contain sediment-laden stormwater run-off from the site during any stages of site disturbance that may be associated with this subdivision.

7. The following documentation is recommended as best practice guidelines for managing erosion and sediment –laden run-off and for the design and construction of erosion and sediment control measures for small sites:

   - ARC Technical Publication No. 90 Erosion and Sediment Control Guidelines for Land Disturbing Activities in the Auckland Region, March 1999.
   - Environment Canterbury, 2007 'Erosion and Sediment Control Guidelines for the Canterbury Region" Report No. CRCR06/23.
   - Environment Canterbury, 2007 "Erosion and Sediment Control Guidelines for Small Sites."

8. All aspects relating to the availability of the water for fire-fighting should be in accordance with SNZ PAS 4509:2008, being the Fire Service Code of Practice for Fire Fighting Water Supplies, unless otherwise approved by the New Zealand Fire Service. Any new development must be within 135m of a fire hydrant, otherwise the proposal will be non-compliant with fire-fighting requirements.

9. Parts 4, 5 and 6 (Stormwater Drainage, Wastewater and Water Supply) of the Dunedin Code of Subdivision and Development 2010 must be complied with.

10. It is advised that any drainage issues and requirements (including the necessary works) will be addressed via the building consent process.

11. Certain requirements for building on this land may be stipulated via the building consent process, and are likely to include the following points:
    - For sites level with or above the road, the finished floor level of any building is to be a minimum of 150mm above the crown of the road.
    - For sites below the road, the finished floor level is to be no less than 150mm above the lowest point on the site boundary. Surface water is not to create a nuisance on any adjoining properties.
    - For secondary flow paths, the finished floor level shall be set at the height of the secondary flow plus an allowance for free board.
    - As required by the New Zealand Building Code E1.3.2, surface water resulting from an event having a 2% probability of occurring annually, shall not enter buildings. The finished floor level shall be set accordingly.

12. This consent does not address any earthworks for this subdivision associated with the development of the new roads, access lots, new lots, or the formation of any new access, manoeuvring areas, or retaining walls. Should earthworks on-site breach the performance standards of Section 17 of the District Plan, further consent will be required. Land use consent may also be required for any structures, such as retaining walls supporting fill or surcharge, near to boundaries.

13. Parking and on-site manoeuvring will be assessed for development on each new lot at the time of building consent or resource consent application.

14. It is recommended that a formal agreement be drawn up between the owners and users of the access lots to clarify the responsibilities for the maintenance of the access lots.

15. It is advised that the vehicle access from the carriageway to the property boundary is over road reserve and is therefore required to be constructed in accordance with the Dunedin City Council Vehicle Entrance Specification (available from Transportation Operations).

16. It is recommended that, if the property owners of 110 and/or 114 Hagart-Alexander Drive have concerns about possible damage to their properties during the construction phase of the subdivision works, they take the opportunity to meet with the developer on their sites prior to construction works commencing with a view to recording the present state of the properties. The developer should also be able to initiate an inspection of their properties prior to works commencing. Council is prepared to hold these records, but will not be involved in any subsequent agreement or dispute that may result between the parties.

17. It is advised that the Council does not share responsibility for the maintenance of fences on front boundaries or reserve land. The developer has offered to pay 50% of the maintenance costs of the new fencing for 110 and 114 Hagart-Alexander Drive during the period of subdivision works only (i.e. up to the signing of the s224(c) certificate of Stage 3 of SUB-2014-91/B or any subsequent variation of this consent). This offer does not extend to the period of development of the new lots. The Council will not be involved in administering this work or in any dispute that may result between the parties.

~~Issued at Dunedin this 27 February 2015.~~
Re-issued at Dunedin pursuant to section 127 this 16 June 2015.

Lianne Darby
Planner

COPY OF PLANS: Not to Scale

NOTES:

ALLOTMENT PURPOSES:

Lots 1-81 are for normal residential sites.

Lots 100, 101 & 105-107 are for Legal Road (public).

Lots 102 & 108-111 are for Reserve (public).

Lot 103 is a large residual residential site (to be retained by the existing landowner).

Lot 104 is a large residential site to be transferred to an adjoining owner (Brooklands Village).

Lot 112 is a leg-in access corridor to be transferred to an adjoining owner (#69 Gladstone Road North).

EASEMENT PURPOSES:

Easements 'B1' and 'B2' are existing access and service easements over new Lots 103 and 104 respectively. These are dominant to #69 Gladstone Road North.

Easement 'C' is a new access and service easement over new Lot 25. This is dominant to Lots 19, 21, 22 & 26-29.

Easement 'D' is a new access and service easement over new Lot 53. This is dominant to Lots 54 & 55.

Easement 'E' is a new access and service easement over new Lot 65. This is dominant to Lots 64, 66 & 103.

Easement 'F' is a new access and service easement over new Lot 37. This is dominant to Lot 36.

Easement 'G' is a service easement over the adjoining DCC Reserve land. This is dominant in gross to DCC.

ACCESS COVENANTS:

Lots 99 and 104 to be subject to a covenant between the developer and the Council to prevent these sites from being used for residential purposes until such time as either i) legal and practical access is directly established, or ii) these sites are legally connected to an adjacent property that already enjoys legal and practical access.

LOTS 1-81 AND 100-112 BEING A PROPOSED SUBDIVISION LOT 1 DP 18047, LOT 23 DP 17999 AND PT SEC 4 BLOCK II EAST TAIERI SURVEY DISTRICT

STAGE A SUBDIVISION LAYOUT

PATERSONPITTS GROUP
Surveying • Planning • Engineering

DUNEDIN

MINARET RESOURCES LIMITED
OWHIRO RIVER LIMITED
HAGART-ALEXANDER DRIVE

OWHIRO PARK
SUBDIVISION LAYOUT PLAN
FOR CONSENT VARIATION

A3 | 1:2,000 | DO NOT SCALE

D14037 - 01 | 2 of 8 | E | 8/05/2015

NOTES

ALLOTMENT PURPOSES:

Lots 1-81 are for normal residential sites.

Lots 100, 101 & 105-107 are for Legal Road (public).

Lots 102 & 108-111 are for Reserve (public).

Lot 103 is a large residual residential site (to be retained by the existing landowner).

Lot 104 is a large residential site to be transferred to an adjoining owner (Brooklands Village).

Lot 112 is a leg-in access corridor to be transferred to an adjoining owner (869 Gladstone Road North).

EASEMENT PURPOSES:

Easements 'B1' and 'B2' are existing access and service easements over new Lots 103 and 104 respectively. These are dominant to 869 Gladstone Road North.

Easement 'C' is a new access and service easement over new Lot 25. This is dominant to Lots 19, 21, 22 & 26-29.

Easement 'D' is a new access and service easement over new Lot 53. This is dominant to Lots 54 & 55.

Easement 'E' is a new access and service easement over new Lot 65. This is dominant to Lots 64, 66 & 103.

Easement 'F' is a new access and service easement over new Lot 37. This is dominant to Lot 36.

Easement 'G' is a service easement over the adjoining DCC Reserve land. This is dominant in gross to DCC.

LOTS 1-81 AND 100-112 BEING A PROPOSED SUBDIVISION OF LOT 1 DP 18347, LOT 23 DP 17069 AND PT SEC 4 BLOCK II EAST TAIERI SURVEY DISTRICT

STAGE 1 SUBDIVISION LAYOUT

PATERSONPITTSGROUP
Surveying • Planning • Engineering

DUNEDIN
Level 2, Otago Place
PO Box 1933
Dunedin 9054
T 03 477 7846
F 03 474 0274
E dunedin@patersonpitts.co.nz

MINARET RESOURCES LIMITED
OWHIRO RIVER LIMITED
HAGART-ALEXANDER DRIVE

OWHIRO PARK
SUBDIVISION LAYOUT PLAN
FOR CONSENT VARIATION

Surveyed	PG	Paper size	Scale
Designed	DR / GM	A3	1:2,000
Drawn	GB		DO NOT SCALE
Checked	PG		
Approved	GM		
Job No	Sheet No	Revision	Date Created
D14867 - 01	3 of 8	E	16/05/2015

NOTES:

ALLOTMENT PURPOSES:

Lots 1-81 are for normal residential sites.

Lots 100, 101 & 105-107 are for Legal Road (public).

Lots 102 & 108-111 are for Reserve (public).

Lot 103 is a large residual residential site (to be retained by the existing landowner).

Lot 104 is a large residential site to be transferred to an adjoining owner (Brooklands Village).

Lot 112 is a leg-in access corridor to be transferred to an adjoining owner (#69 Gladstone Road North).

EASEMENT PURPOSES:

Easements 'B1' and 'B2' are existing access and service easements over new Lots 103 and 104 respectively. These are dominant to #69 Gladstone Road North.

Easement 'C' is a new access and service easment over new Lot 25. This is dominant to Lots 19, 21, 22 & 26-29.

Easement 'D' is a new access and service easment over new Lot 53. This is dominant to Lots 54 & 55.

Easement 'E' is a new access and service easment over new Lot 65. This is dominant to Lots 64, 66 & 103.

Easement 'F' is a new access and service easment over new Lot 37. This is dominant to Lot 36.

Easement 'G' is a service easment over the adjoining DCC Reserve land. This is dominant in gross to DCC.

LOTS 1-81 AND 100-112 BEING A PROPOSED SUBDIVISION
LOT 1 DP 18347, LOT 23 DP 17899 AND PT SEC 4 BLOCK II
EAST TAIERI SURVEY DISTRICT

STAGE 2 SUBDIVISION LAYOUT

PATERSONPITTS GROUP
Surveying • Planning • Engineering

MINARET RESOURCES LIMITED
OWHIRO RIVER LIMITED
HAGART-ALEXANDER DRIVE

OWHIRO PARK
SUBDIVISION LAYOUT PLAN
FOR CONSENT VARIATION

A3		1:2,000	
		DO NOT SCALE	
D14687 - 01	4 of 6	E	8/03/2016

NOTES:

ALLOTMENT PURPOSES:

Lots 1-61 are for normal residential sites.

Lots 100, 101 & 105-107 are for Legal Road (public).

Lots 102 & 108-111 are for Reserve (public).

Lot 103 is a large residual residential site (to be retained by the existing landowner).

Lot 104 is a large residential site to be transferred to an adjoining owner (Brooklands Village).

Lot 112 is a leg-in access corridor to be transferred to an adjoining owner (#69 Gladstone Road North).

EASEMENT PURPOSES:

Easements 'B1' and 'B2' are existing access and service easements over new Lots 103 and 104 respectively. These are dominant to #69 Gladstone Road North.

Easement 'C' is a new access and service easment over new Lot 25. This is dominant to Lots 19, 21, 22 & 26-29.

Easement 'D' is a new access and service easment over new Lot 53. This is dominant to Lots 54 & 55.

Easement 'E' is a new access and service easment over new Lot 65. This is dominant to Lots 64, 66 & 103.

Easement 'F' is a new access and service easment over new Lot 37. This is dominant to Lot 36.

Easement 'G' is a service easment over the adjoining DCC Reserve land. This is dominant in gross to DCC.

LOTS 1-61 AND 100-112 BEING A PROPOSED SUBDIVISION LOT 1 DP 18947, LOT 23 DP 17999 AND PT SEC 4 BLOCK II EAST TAIERI SURVEY DISTRICT

STAGE 3 SUBDIVISION LAYOUT

PATERSONPITTSGROUP
Surveying • Planning • Engineering

DUNEDIN

MINARET RESOURCES LIMITED
OWHIRO RIVER LIMITED
HAGART-ALEXANDER DRIVE

OWHIRO PARK
SUBDIVISION LAYOUT PLAN
FOR CONSENT VARIATION

43

1:2,000

DO NOT SCALE

D14667 - 31

5 of 8

E

8/05/2015

30 November 2015

Minaret Resources Limited
C/- Kurt Bowen
Paterson Pitts Group
PO Box 5933
Moray Place
Dunedin 9058

Dear Kurt

RESOURCE CONSENT APPLICATION: SUB-2014-91/C
VARYING SUB-2014-91/B
(LUC-2014-323/A INCLUDED)
67 & 67A GLADSTONE ROAD NORTH
112 HAGART ALEXANDER DRIVE
ESPLANADE RESERVE
MOSGIEL

Your application for the variation of resource consent SUB-2014-91, to change the status of Lot 105 from road reserve to a fee-simple lot in private ownership, lodged pursuant to section 127 of the Resource Management Act 1991, was processed on a non-notified basis in accordance with sections 95A to 95G of the Resource Management Act 1991. In considering sections 95A to 95G, it was determined that the effects would be no more than minor, there were no affected parties, and there were no special circumstances in relation to the proposal. Therefore, public notification of the application was not required. The application was considered under delegated authority on 16 June 2015.

I advise that the Council has **granted** the request for a change of conditions. The full text of the decision commences on the attached certificate.

BACKGROUND TO APPLICATION

Resource consent SUB-2011-91 for the subdivision of the above sites into 81 residential lots, roading, and reserve, and land use consent LUC-2014-323 for the creation of a new lot with no access or frontage to legal road, was processed on a limited notified basis. The applications were granted on 27 February 2015, subject to conditions of consent.

The subject sites are:

- 67 Gladstone Road North, legally described as Part Section 4 Block II East Taieri Survey District (CFR OT258/263 Ltd – Part Cancelled). The title shows the area to be 20.3582ha, but the part-cancellation of this title removed 15.7170ha from the site in 1974 leaving an area of 4.6412ha. Council's cadastral layer of GIS shows it to have an area of 4.733ha;
- 67A Gladstone Road North, legally described as Lot 1 Deposited Plan 18347 (CFR OT9C/1038), with an area of 2.8443ha;
- 112 Hagart-Alexander Drive, legally described as Lot 23 Deposited Plan 17999 (CFR OT13B/881), with an area of 696m^2; and

- Esplanade Reserve, legally described as Lot 2 Deposited Plan 18347 (CFR OT18A/955), having an area of 9279m^2.

SUB-2014-91/A was an objection to the fees charged for the consent.

SUB-2014-91/B and LUC-2014-323/A were issued on 16 June 2015 as variations of the original consent. SUB-2014-91/B staged the subdivision in to four stages, and changed the layout of the subdivision as follows:

- The introduction of a cul-de-sac to replace a proposed right of way in favour of ten users.
- New Lot 105, to vest as road with Council, to facilitate future access to the land on the northeast if so needed.
- New Lots 108 and 110, being pedestrian links between the loop road and the cul-de-sac.
- New Lot 109, being the central island of the cul-de-sac.
- New Lot 111, being a pedestrian access to the Main South Railway Line rail corridor.
- New Lot 112, being a proposed access for Lot 1 DP 18209 (69 Gladstone Road North) to provide this existing property with legal access.

LUC-2014-323/A was varied to recognise the changes to the subdivision consent.

Resource consent LUC-2015-389 was issued on 30 September 2015 for earthworks associated with the subdivision development.

CURRENT APPLICATION

The applicant seeks to vary condition 7(f) of SUB-2015-91/Bwhich states:

> 7(f) *That Lot 105 shall be shown on the plan as vesting with Council as local purpose reserve (road). It shall have a minimum width of 16.0m.*

The purpose of Lot 105 is to ensure that future access will be available to the adjoining land of Lot 9 Deposited Plan 254, held in Computer Freehold Register OT14D/242. The neighbouring land is zoned Rural in the Dunedin City District Plan, and Rural – Taieri Plains in the Proposed Second Generation District Plan, so there is no development of this land anticipated in the foreseeable future, but access to the land is significantly limited. The creation of proposed Lot 105 as road reserve was required by the Hearings Committee as condition 2(l) of the original consent, in order to safeguard the access options to this land.

The applicant seeks to have this lot created as a fee-simple lot which can be transferred to the owner of the adjoining land. The applicant would prefer to transfer this land at the completion of Stage 2, which is expected to resolve the matter of future access as the two sites will be held in common ownership.

As a result of a meeting at Council on 17 November 2015 between the applicant's agent and Council staff, the proposed variation has been revised. While the proposal is still to have Lot 105 as a private fee-simple lot, the applicant now proposes creating an easement in gross in favour of the Dunedin City Council over the entire lot, to ensure that the lot is used for access and not be converted to residential use. There is also to be a consent notice placed on the new title conditioning the future ownership of the lot, the future use of the lot, and the responsibilities for on-going development and maintenance of the land.

REASONS FOR APPLICATION

Section 127(1) of the Resource Management Act 1991 states:

The holder of a resource consent may apply to a consent authority for a change or cancellation of a condition of the consent (other than any condition as to the duration of the consent).

Section 127(3) of the Act states that *"Sections 88 to 121 apply, with all necessary modifications as if –*

a) the application were an application for a resource consent for a discretionary activity; and

b) the references to a resource consent and to the activity were references only to the change or cancellation of a condition and the effects of the change or cancellation respectively.

PLANNING ASSESSMENT

The survey plans for Stages 2 to 4 of the subdivision have not yet been certified under section 223 or 224(c) of the Resource Management Act 1991. Accordingly, the Council is able to consider the application under section 127(1)(a) of the Resource Management Act 1991.

As stated in section 127(3)(a) of the Resource Management Act 1991, the application for the variation is a **discretionary activity**.

Affected Persons

Section 127(4) of the Act states that *"For the purposes of determining who is adversely affected by the change or cancellation, the local authority must consider, in particular, every person who –*

a) made a submission on the original application; and
b) may be affected by the change or cancellation."

The original application was processed on a limited notified basis, with the owners and occupiers of 110 and 114 Hagart Alexander Drive being considered affected parties to the subdivision proposal because of an introduction of a new road where there is currently a residential property. The consent was granted, and there were no appeals to the decision.

The proposed variation does not have any effects on these parties, and the only landowner potentially affected by the change in status of proposed Lot 105 is the adjoining property owner of Lot 9 DP 254 as its purpose is to provide access to this land. The proposed variation will not change this purpose, nor limit the future use of this land as a road (should the need arise), although the means of securing this access potential will change. Accordingly, this party is not considered affected by the proposed variation. No other persons are considered to be adversely affected by this proposal for the reasons discussed below in the section on the effects on the environment.

ASSESSMENT OF EFFECTS ON THE ENVIRONMENT

Effects on the Environment

1. Transportation

The purpose of Lot 105 was to secure access to Lot 9 DP 254 which is a parcel of land with very limited access options currently. Provided that access is available in the future, and that the Council has the ability to ensure general public use of this land for access if needed, then the proposal is acceptable. The Transportation Planner, Transportation, comments:

'Transportation has considered the above application, which proposes Lot 105 being changed from local purpose reserve (road) to a fee-simple title.

The variation is requested due to negotiations relating to access with the neighbouring property to the east of the site.

'In principle we do not object to the variation, provided Lot 105 is held aside via appropriate legal mechanisms to provide road access to the neighbouring property, should it be required in the future. This is in order to protect and facilitate a cohesive transportation network in the future, between the current development site (112 Hagart Alexander Drive) and the land to the east.

'We have considered the e-mail from the applicant's agent (Kur Bowen), dated 18 Nov 2015, which outlines the elements that will be placed over Lot 105 in order to protect future public access, and absolve the Council from maintenance and other related responsibilities which might normally apply to fee-simple land that Council has an interest in. This involves an easement (right of way) in gross over Lot 105 in favour of the Council, and additional consent notices placed on Lot 105. We consider the easement and consent notices to be acceptable to protect/facilitate future access over Lot 105, should it be needed for public access/roading. It is appreciated that you may wish to amend the proposed conditions slightly to ensure that the conform to normal Council requirements.'

The applicant proposes a consent notice which will require the land to be held in common ownership with the land of Lot 9 DP 254 or by the Council. Both options are considered to be acceptable.

2. Easements (18.6.1(i))

In an email dated 18 November 2015, the applicant's agent has proposed creating an easement in gross over the entire extent of proposed Lot 105 in favour of the Dunedin City Council. There will be no requirement for the consent holder or neighbouring property owner to form the right of way in gross, but the easement in gross will prevent any structures being erected on the site, thereby protecting its potential as road in the future. The easement in gross will be a new condition of consent.

DECISION

SUB-2014-91/C

That pursuant to sections 34(A) and 127(1) of the Resource Management Act 1991 and after having regard to section 104 of the Act, the Dunedin City Council ***grants*** *consent to the discretionary activity of varying SUB-2014-91/B for the subdivision of 67 & 67A Gladstone Road North, 112 Hagart Alexander Drive and Esplanade Reserve by changing the road reserve status of new Lot 105, and accordingly SUB-2014-91/B is amended to read as shown on the attached certificate.*

LAPSING OF CONSENT

The original consent SUB-2014-91, was for a single stage subdivision, and was given a lapse period of ten years, lapsing on 27 February 2025. SUB-2014-91/B staged the subdivision into three stages. It is usual Council practice to impose a five year lapse period of Stage 1 of staged subdivisions, and ten year lapse periods on subsequent stages (if so requested). The applicant's agent agreed to a five year lapse period for Stage 1. This will also include the preliminary stage, Stage A. Accordingly, **Stages A and 1 of SUB-2014-91/B** shall lapse on **27 February 2020**, five years after the issuing of SUB-2014-91, and **Stages 2 and 3** shall lapse on **27 February 2025**, ten years after the issuing of the original consent. LUC-2014-323 also has a ten year lapse period. This is considered sufficient considering it will actually address a temporary situation created at Stage A.

This proposed variation does not change the lapse dates of any stage of the subdivision proposal, nor the land use proposal.

COMPLIANCE WITH CONDITIONS

It is the consent holder's responsibility to comply with any conditions imposed on their resource consent prior to and during (as applicable) exercising the resource consent. Failure to comply with the conditions may result in prosecution, the penalties for which are outlined in section 339 of the Resource Management Act 1991.

REASONS FOR DECISION

It is considered appropriate to amend the consent decision for the following reasons:

1. Future access over Lot 105 will be retained as an easement in gross in favour of the Dunedin City Council. The lot can be held in the ownership of the Council or the property owner of Lot 29 DP 254, thereby ensuring that the neighbouring land has access options in the future.

2. Transportation has considered the proposal and has no concerns subject to additional conditions of consents over Lot 105, as promoted by the applicant.

RIGHTS OF OBJECTION

In accordance with section 357 of the Resource Management Act 1991, the consent holder may object to this decision or any condition within 15 working days of the decision being received, by applying in writing to the Dunedin City Council at the following address:

The Chief Executive
Dunedin City Council
P O Box 5045
Dunedin

Attn: Senior Planner – Enquiries Plaza, Ground Floor

Yours faithfully

Lianne Darby
PLANNER

Consent Type: Section 127 Variation of Conditions

Consent Number: SUB-2014-91/C (being a variation of the subdivision of SUB-2014-91/B)
LUC-2014-323/A is included for completeness sake.

SUB-2014-91/B

*That pursuant to sections 34(A) and 127(1) of the Resource Management Act 1991 and after having regard to section 104 of the Act, the Dunedin City Council **grants** consent to the discretionary activity of varying SUB-2014-91/B for the subdivision of 67 & 67A Gladstone Road North, 112 Hagart Alexander Drive and Esplanade Reserve by changing the road reserve status of new Lot 105.*

The Amended Decision now reads:

Location of Activity: 67 & 67A Gladstone Road North, 112 Hagart-Alexander Drive, & Local Purpose Reserve (Esplanade), Mosgiel

Legal Description: Part Section 4 Block II East Taieri Survey District (CFR OT258/263 Ltd – Part Cancelled), Lot 1 Deposited Plan 18347 (CFR OT9C/1038), Lot 23 Deposited Plan 17999 (CFR OT13B/881), and part of Lot 2 Deposited Plan 18347 (CFR OT18A/955).

Lapse Date: SUB-2014-91/B: Stages A and 1: 27 February 2020, unless the consent has been given effect to before this date.
SUB-2014-91/B: Stages 2 and 3: 27 February 2025, unless the consent has been given effect to before this date.
LUC-2014-323/A: 27 February 2025, unless the consent has been given effect to before this date.

Subdivision SUB-2014-91 (as varied by SUB-2014-91/B and SUB-2014-91/C)

*That pursuant to section 34A(1) and 104B, and after having regard to Part II matters and sections 104 and 104D of the Resource Management Act 1991, the Dunedin City Council **grants** consent to a **non-complying** activity being the subdivision of 67 and 67A Gladstone Road North, Mosgiel, being the sites legally described as Part Section 4 Block II East Taieri Survey District (CFR OT258/263 Ltd – Part Cancelled) and Lot 1 DP 18347 (CFR OT9C/1038) into 81 residential lots, stormwater management lot, roading and balance land, with legal access to be obtained over 112 Hagart-Alexander Drive, legally described as Lot 23 DP 17999 (CFR OT13B/881) and Local Purpose Reserve (Esplanade), legally described as Lot 2 DP 18347 (CFR OT18A/955), subject to the conditions imposed under sections 108 and 220 of the Act, as follows:*

Stage A ('Stage 1' in Council's system): Subdivision of Part Section 4 Block II East Taieri Survey District (CFR OT258/263 Ltd – Part Cancelled) and Lot 1 DP 18347 (CFR OT9C/1038) into Lots 99, 103 and 104.

1. *The proposal shall be given effect to generally in accordance with the plan prepared by Paterson Pitts Group entitled, 'Owhiro Park Subdivision Layout Plan for Consent Variation – Stage A Subdivision Layout,' Revision E, dated 8 May 2015, and the accompanying information submitted as part of SUB-2014-91/B received at Council on*

18 May 2015, and the information submitted as part of SUB-2014-91/C received at Council on 6 November 2015, except where modified by the following:

2. *Prior to certification of the survey plan pursuant to section 223 of the Resource Management Act 1991, the applicant shall ensure the following:*

   a) *If a requirement for any easements for services is incurred during the survey then those easements shall be granted or reserved and included in a Memorandum of Easements on the survey plan.*

Stage 1 ('Stage 2' in Council's system): Subdivision of Lot 99 Stage A, Lot 23 Deposited Plan 17999 (CFR OT13B/881) and Lot 2 Deposited Plan 18347 (Esplanade Reserve - CFR OT18A/955) into Lots 1 to 31, Lots 100 and 101 (road to vest), Lot 102 (Stormwater Management Lot), and balance land Lot 98:

3. *The proposal shall be given effect to generally in accordance with the revised plan prepared by Paterson Pitts Group entitled, 'Owhiro Part Subdivision Layout Plan for Consent Variation – Stage 1 Subdivision Layout,' Revision E, dated 8 May 2015, and the information submitted as part of SUB-2014-91 received by Council on 27 June 2014, and the further information received at Council on 18 December 2014 and the applicant's written right of reply received at Council on 12 February 2015, and the variation SUB-2014-91/B received at Council on 18 May 2015, except where modified by the following:*

4. *Prior to certification of the survey plan pursuant to section 223 of the Resource Management Act 1991, the applicant shall ensure the following:*

   a) *If a requirement for any easements for services is incurred during the survey then those easements shall be granted or reserved and included in a Memorandum of Easements on the survey plan.*

   b) *That the width of the future legal road between Hagart-Alexander Drive to the south side of the Owhiro Stream shall have a minimum width of 20.0m. This will be comprised of Local Purpose Reserve (Road) and road to vest.*

   c) *That the consent holder shall provide to the Council all documentation necessary to enable the portion of Local Purpose Reserve (Esplanade) to be reclassified as Local Purpose Reserve (Road) in order to achieve legal access to the development. This area shall be generally consistent with the land shown on the application plan as '(A) to become Local Road' except that a strip of Local Purpose Reserve (Esplanade) is to be maintained along the north-eastern edge next to 110 Hagart-Alexander Drive. This strip shall be at least 2.0m wide.*

   d) *That, if land of the present 112 Hagart-Alexander Drive is to be transferred to the owners of 114 Hagart-Alexander Drive, then an additional lot shall be shown on the plan between the present north-eastern side boundary of 114 Hagart-Alexander Drive and the new road. This lot shall be amalgamated with the land of 114 Hagart-Alexander Drive. The legal width of the new road shall not be narrower than 20.0m as a result of the transfer of land.*

   e) *That Right of Way C shall be duly created or reserved over new Lot ~~7~~ 25 in favour of Lots 19, 21, 22 & 26 - 29, and shall be shown on the plan in a Memorandum of Easements. It shall have a minimum legal width of 6.0m where serving four or more residences, and a minimum legal width of 3.5m where serving three or fewer residences.*

f) That Lots 100 and 101 shall be shown on the plan as vesting with Council as road.

g) That an easement in gross in favour of the Dunedin City Council shall be duly created or reserved over any servicing infrastructure (water, stormwater or wastewater) to be vested with Council which is located within privately owned property, and shall be shown on the plan in a Memorandum of Easements in Gross. The easements shall be made in accordance with the relevant section/s of the Dunedin Code of Subdivision and Development 2010.

h) That any easements for drainage to pass over the Local Purpose Reserve (Esplanade) shall be first approved by the Group Manager, Parks, Recreation and Aquatics.

5. *Prior to certification pursuant to section 224(c) of the Resource Management Act 1991, the applicant shall complete the following:*

a) The subdividing owner of the land shall provide a letter to the Council advising who their representative shall be for the design and execution of the engineering works required in association with this subdivision and shall confirm that this representative will be responsible for all aspects of the works covered under NZS4404:2004 "Code of Practice for Urban Land Subdivision" in relation to this development.

Pre-Construction

b) That a site specific geotechnical investigation of the entire subject site (Stages 1, 2 and 3) be undertaken by an appropriately qualified person to determine the potential for amplified movements and liquefaction of soils during significant seismic events. Dynamic cone testing to 10m depth is recommended to classify the potential for liquefaction for each dwelling. The report shall determine whether specifically designed ground improvements works are required. These shall be addressed through the earthworks phase of the project which will require additional resource consent.

c) The consent holder shall provide detailed engineering plans and associated calculations of how the subdivision is to be serviced for water, stormwater and wastewater to the Asset Planning Engineer, Water and Waste Services Business Unit, for approval prior to any works commencing on-site. The engineering plans and associated calculations shall meet the requirements of the Construction Plan Check List.

d) Prior to the commencement of any construction on site, the consent holder shall submit for the approval of the Parks Officer a detailed landscape plan for the southern bank of the Owhiro Stream (local purpose esplanade reserve). This plan shall include plant species and the proposed construction details for the walking track.

Construction Period

e) That the property owners of 110 and 114 Hagart-Alexander Drive shall be notified in writing at least 10 days prior to construction works commencing on the removal of the house of 112 Hagart-Alexander Drive and again prior to the construction commencing of the new road between Hagart-Alexander Drive and the Owhiro Stream. The letters shall contain information on the general time frames expected for the works.

f) All construction work on the site shall be designed and conducted to ensure that construction noise does not exceed the noise limits in the following table.

Time of Week	*Time Period*	*Leq (dBA)*	*L max(dBA)*
Weekdays	*0730-1800*	*75*	*90*
	1800-2000	*70*	*85*
	2000-0730	*45*	*75*
Saturdays	*0730-1800*	*75*	*90*
	1800-2000	*45*	*75*
	2000-0730	*45*	*75*
Sundays and public holidays	*0730-1800*	*55*	*85*
	1800-2000	*45*	*75*

Sound levels shall be measured and assessed in accordance with the provisions of NZS 6803: 1999 Acoustics – Construction noise. Please Note: the lower noise limits on Sundays and Public Holidays may mean that no construction work can occur on these days.

Water Supply

g) An "Application for Water Supply – New Service" shall be submitted to the Water and Waste Services Business Unit for approval to establish new water connections to each unserviced residential lot. Details of how each new lot is to be serviced for water shall accompany the application.

h) Upon approval by the Water and Waste Services Business Unit, water service connections shall be installed in accordance with the requirements of Section 6.6.2 of the Dunedin Code of Subdivision and Development 2010.

Stormwater Services

i) A Stormwater Management Plan for the entire subdivision (Stages 1, 2 and 3) shall be provided to the Water and Waste Services Manager for approval prior to works commencing. The Stormwater Management Plan shall outline how stormwater from the subdivision will be managed to ensure post-development flows do not exceed pre-development flows, and identify and address any downstream effects of the stormwater generated by the development, including any mitigation required.

j) The stormwater management for Stage 1 of the subdivision shall be undertaken in accordance with the approved Stormwater Management Plan. Either:

- *a consent notice shall be prepared requiring on-site retention tanks to be installed on each new lot. The consent notice shall read as follows in condition 5(k); or*
- *A stormwater retention system which caters for all the lots shall be built on Lot 102. This could be in the form of a retention pond or similar. The details of any combined stormwater retention system shall be approved by the Water and Waste Services Business Unit.*

k) That, if using individual on-site stormwater retention, a consent notice shall be prepared for registration on the residential lots for the following on-going condition:

'Prior to residential activity being established on this site, a stormwater retention tank, to retain all stormwater run-off from roof and any hard stand area surface, shall be installed. The tank shall have a minimum storage capacity of 3000 litres, or another volume as agreed with the Water and Waste Services Business Unit at the Dunedin City Council. Primary discharge shall be through a restricted aperture located near the invert of the tank, which shall be specifically designed to pass 0.5 litres per second. Secondary discharge shall be by way of a standard 100mm diameter drain installed at the top of the tank which shall provide an escape route for water during extreme rainfall events.'

Foul Sewer Services

l) That all wastewater infrastructure for Stage 1 shall be installed in accordance with Section 5 of the Dunedin Code of Subdivision and Development 2010, unless specifically authorised by the Network Engineer, Water and Waste Services Business Unit.

Erosion and Sediment Control

m) That all practicable measures shall be used to mitigate erosion and to control and contain sediment-laden stormwater run-off from the site during any stages of site disturbance that may be associated with this subdivision.

Transportation

n) Detailed engineering plans, including cross sections, showing the details of the construction of the new road (Design A, as submitted in the further information received at Council on 18 December 2014) shall be submitted to, and approved by, the Group Manager Transportation, in consultation with the Group Manager Parks, Recreation and Aquatics, prior to construction.

o) If the property owners of 114 Hagart-Alexander Drive desire to relocate their vehicle entrance to the new road, the consent holder shall install a compliant access between the carriageway of the new road and the existing property boundary of 114 Hagart-Alexander Drive at the consent holder's expense. The existing Hagart-Alexander Drive access to the property shall also be reinstated as kerb and channel and grass up to the edge of the footpath, at the consent holder's expense. The consent holder is not responsible for internal alterations to the layout of the property which might be undertaken.

p) Detailed design of the road intersection of Hagart-Alexander Drive and the new road shall be carried out by a suitably qualified engineer, and shall ensure all safety and efficiency matters are adequately addressed.

q) The proposed bridge or culvert shall be designed so that routine maintenance is able to be undertaken on it without impeding the two-way vehicular road operating conditions.

r) Vegetation with a maximum height of 2.0m shall be established within the new legal road between 110 and 114 Hagart-Alexander Drive. Details of the proposed vegetation shall be submitted to the Resource Consents Manager for approval prior to planting commencing.

s) Upon completion of construction of the new road, all works shall be tested to demonstrate that they meet the acceptance requirements of the Dunedin Code of Subdivision and Development 2010.

t) Right of Way C shall be formed in accordance with the widths specified in Rule 20.5.7(v)(b) of the District Plan, and be hard surfaced and adequately drained for its duration.

Urban Landscape Conservation Area Development

u) That the enhancement of the urban landscape conservation area shall be undertaken in accordance with the approved plans of condition ~~3(d)~~ 5(d) above.

v) Any physical works within the reserve area, except for work required to install the new access road shall be undertaken after the completion of the bulk earthworks. This is to ensure the existing vegetation within the reserve is available as a means of sediment control to protect the stream. (Note: the vegetation should not be relied upon as the significant form of sediment control during the earthworks).

w) Prior to the construction of the access road, the consent holder shall submit for the approval of the Parks Officer a landscape and maintenance plan for vegetation on each side of the new road. All landscaping shall be implemented in accordance with the approved plan. The consent holder is expected to maintain the vegetation for a period of five years.

x) The consent holder shall pay Council a $2000 bond for the on-going maintenance over a five year period of the roadside vegetation of condition 5(r) above. The bond will also cover any requirement to replace sick or dying plants.

y) Prior to the commencement of any works on site the consent holder shall submit for the approval of the Parks Officer an erosion and sediment control plan. The plan should demonstrate how the esplanade reserve shall be protected during the earthworks for the project. (Note: this condition is specific to the protection of the esplanade reserve. A more complete plan may be required for other aspects of the development).

z) Prior to the construction of the access road from Hagart-Alexander Drive to the proposed development the consent holder shall submit a plan for the approval of the parks officer showing the access points to all four areas of local purpose esplanade reserve adjoining the access road. The access points shall be a minimum of 2.0m in width and the design shall be suitable for maintenance vehicles and pedestrians.

aa) Prior to the submission of any drainage plans the consent holder must seek the approval of the Parks, Recreation and Aquatics Department for any drains that are proposed to cross the adjacent reserve. Appropriate legal instruments will be required for any drains that cross the reserve. The consent holder shall be responsible for all costs associated with the preparation of the documentation.

General

bb) That prior to construction works commencing on the new road to the development, acoustic fencing shall be attached to the outer side of the existing fencing of 110 and 114 Hagart-Alexander Drive. The fencing shall be at least as high as the existing fence, but shall be no higher than 2.0m unless the property owners seek a higher fence and resource consent is obtained. Alternatively, if the property owners want a fence of a different design along their boundaries, the consent holder shall contribute to the cost of a new fence of any design up to the value of the acoustic fencing which it is replacing.

cc) That vehicle access shall be formed between Lot 100 (road to vest) and Brooklands Village, to be utilised only in emergencies. A removable barrier or gate shall be erected to prevent casual through-traffic.

dd) That a consent notice shall be registered on the titles of those lots affected by the access of condition 5(dd) above, for the following on-going condition:

> *'Vehicle access through this property shall be made available for emergency services and all residents of Brooklands Village and/or the residential lots of [insert name of new road of subdivision] if either Balmoral Avenue or [insert name of new road to subdivision] is blocked because of a natural hazard (such as flooding) or an emergency. This access is only to be used during the period of the blockage.'*

ee) That a consent notice shall be registered on the titles of those lots abutting the esplanade reserve for the following on-going conditions:

> *'All stormwater from the site shall be captured and disposed of to an approved drain. No stormwater is to be drained onto the Council reserve.'*
>
> *'The costs of fencing on any boundary shared with Council shall be met by the property owner.'*
>
> *'All fencing on the reserve boundary shall be restricted to a maximum of 1.2 metres in height or 1.8 metres in height with 40% permeability.'*

ff) The subdivider shall provide to Council 'as-built' plans and information detailing all engineering works completed in relation to or in association with this subdivision.

Such "as-built" plans of:

(i) the water reticulation pipes laid within the subdivision shall include the locations of hydrants, valves, pipelines, service connections and manifold box installations and details of the pipeline materials and depth of cover over the pipelines. Written confirmation shall also be given that only approved materials have been used in the construction of the water reticulation in the subdivision.

(ii) the foul and stormwater system shall show laterals for each lot.

Stage 2 ('Stage 3' in Council's system): Subdivision of Lot 98 Stage 1 into Lots 32 to 56, Lot 105 ~~(road reserve to vest)~~, Lot 106 (road to vest), Lot 108 (pedestrian walkway), Lot 109 (cul-de-sac island), and balance land Lot 97:

6. *The proposal shall be given effect to generally in accordance with the revised plan prepared by Paterson Pitts Group entitled, 'Owhiro Part Subdivision Layout Plan for Consent Variation – Stage 2 Subdivision Layout,' dated 8 May 2015, and the information submitted as part of SUB-2014-91 received by Council on 27 June 2014, and the further information received at Council on 18 December 2014 and the applicant's written right of reply received at Council on 12 February 2015, and the variation SUB-2014-91/B received at Council on 18 May 2015, and the variation SUB-2014-91/C received at Council on 6 November 2015, except where modified by the following:*

7. *Prior to certification of the survey plan pursuant to section 223 of the Resource Management Act 1991, the applicant shall ensure the following:*

a) If a requirement for any easements for services is incurred during the survey then those easements shall be granted or reserved and included in a Memorandum of Easements on the survey plan.

b) That Right of Way D shall be duly created or reserved over Lot 53 in favour of Lots 54 and 55, and shall be shown on the survey plan in a Memorandum of Easements. Right of Way D shall have a minimum legal width of 3.5m.

c) That Right of Way F shall be duly created or reserved over Lot 37 in favour of Lot 36, and shall be shown on the survey plan in a Memorandum of Easements. Right of Way F shall have a minimum legal width of 3.5m.

d) That Lot 106 shall be shown on the plan as vesting with Council as road. It shall have a minimum width of 16.0m.

e) That Lot 108 shall vest with Council as accessway. Its width shall be determined in consultation with Transportation.

~~*f) That Lot 105 shall be shown on the plan as vesting with Council as local purpose reserve (road). It shall have a minimum width of 16.0m.*~~

g) That a right of way in gross shall be created over Lot 105 in favour of the Dunedin City Council, and shall be shown on the survey plan in a Memorandum of Easements in Gross. The easement in gross shall cover the entire extent of Lot 105.

8. *Prior to certification pursuant to section 224(c) of the Resource Management Act 1991, the applicant shall complete the following:*

a) The subdividing owner of the land shall provide a letter to the Council advising who their representative shall be for the design and execution of the engineering works required in association with this subdivision and shall confirm that this representative will be responsible for all aspects of the works covered under NZS4404:2004 "Code of Practice for Urban Land Subdivision" in relation to this development.

Construction Period

b) All construction work on the site shall be designed and conducted to ensure that construction noise does not exceed the noise limits in the following table.

Time of Week	*Time Period*	*Leq (dBA)*	*L max(dBA)*
Weekdays	*0730-1800*	*75*	*90*
	1800-2000	*70*	*85*
	2000-0730	*45*	*75*
Saturdays	*0730-1800*	*75*	*90*
	1800-2000	*45*	*75*
	2000-0730	*45*	*75*
Sundays and public holidays	*0730-1800*	*55*	*85*
	1800-2000	*45*	*75*

Sound levels shall be measured and assessed in accordance with the provisions of NZS 6803: 1999 Acoustics – Construction noise. Please Note:

the lower noise limits on Sundays and Public Holidays may mean that no construction work can occur on these days.

Water Supply

c) An "Application for Water Supply – New Service" shall be submitted to the Water and Waste Services Business Unit for approval to establish new water connections to each unserviced residential lot. Details of how each new lot is to be serviced for water shall accompany the application.

d) Upon approval by the Water and Waste Services Business Unit, water service connections shall be installed in accordance with the requirements of Section 6.6.2 of the Dunedin Code of Subdivision and Development 2010.

Stormwater Services

e) The stormwater management for Stage 2 of the subdivision shall be undertaken in accordance with the approved Stormwater Management Plan of condition 5(i) above. If individual on-site stormwater retention is to be installed on each new lot, a consent notice shall be prepared for registration on the title of Lots 32 to 56 for the following on-going condition:

> *'Prior to residential activity being established on this site, a stormwater retention tank, to retain all stormwater run-off from roof and any hard stand area surface, shall be installed. The tank shall have a minimum storage capacity of 3000 litres, or another volume as agreed with the Water and Waste Services Business Unit at the Dunedin City Council. Primary discharge shall be through a restricted aperture located near the invert of the tank, which shall be specifically designed to pass 0.5 litres per second. Secondary discharge shall be by way of a standard 100mm diameter drain installed at the top of the tank which shall provide an escape route for water during extreme rainfall events.'*

Foul Sewer Services

f) That all wastewater infrastructure for Stage 2 shall be installed in accordance with Section 5 of the Dunedin Code of Subdivision and Development 2010, unless specifically authorised by the Network Engineer, Water and Waste Services Business Unit.

Erosion and Sediment Control

g) That all practicable measures shall be used to mitigate erosion and to control and contain sediment-laden stormwater run-off from the site during any stages of site disturbance that may be associated with this subdivision.

Transportation

h) Detailed engineering plans, including cross sections, showing the details of the construction of the new roading within Lot 106 shall be submitted to, and approved by, the Group Manager Transportation, in consultation with the Group Manager Parks, Recreation and Aquatics, prior to construction.

i) Upon completion of construction of the new road, all works shall be tested to demonstrate that they meet the acceptance requirements of the Dunedin Code of Subdivision and Development 2010.

j) Rights of Way D and F shall be formed to a minimum width of 3.0m, and be hard surfaced and adequately drained for their duration.

k) Lot 108 shall be formed in accordance with the widths specified in Rule 20.5.7(v)(b) of the District Plan, and be hard surfaced and adequately drained.

l) That detailed design of the landscaping for Lot 109 and an implementation plan shall be submitted to the Council for approval prior to works on Lot 109 commencing. The landscaping shall incorporate the following features:

- *The entire lot, excepting hard surfaced areas, shall be planted in shrubbery or small trees;*
- *There shall be no chain link fencing or any other barrier erected;*
- *There shall be no grass lawn;*
- *Pathways within Lot 109 shall be hard surfaced.*

m) The landscaping of Lot 109 shall be established in accordance with the approved design and implementation plan of condition 8(l) above at the consent holder's expense.

n) A bond of $5000 shall be paid to Council to cover a 12 month maintenance period for the landscaping of Lot 109, commencing from the signing of s224(c) for this stage.

General

o) That a 1.8m high fence shall be constructed along the railway boundary of Lots 53 to 56 to prevent pedestrians crossing the railway line. The fence shall also extend along the northeast boundary of Lot 53 for at least 50.0m.

p) That a consent notice be prepared for registration on the titles of Lots 53 to 56 for the following on-going condition:

> *'All buildings, balconies and decks on this site shall be set back from the boundary with the railway corridor by a minimum of 10.0m.'*
>
> *'Buildings shall be designed, constructed and maintained to ensure the following internal design noise limits are not exceeded, and shall take into account future use of the Main South Railway Line by the addition of 3dB to existing measured or calculated sound levels.'*

Receiving Environment (New, relocated or altered)	***Criterion***
Residential - Bedrooms	*35 $dB_{LAeq,\ 1\ hour}$*
Residential – Habitable Spaces	*40 $dB_{LAeq,\ 1\ hour}$*
Primary Outdoor Amenity Areas	*60 $dB_{LAeq,\ 1\ hour}$*

> *'Where it is necessary to have windows closed to achieve the acoustic design requirements above, an alternative ventilation system shall be installed to provide thermal comfort. To achieve thermal comfort, the following requirements for a ventilation system are recommended:*
>
> - *A quantity of air shall be provided to achieve the requirements of Clause G4 of the New Zealand Building Code. At the same time as meeting this requirement, the sound of the system shall not exceed 30dB LAeq(30s) when measured 1.0m away from any grille or diffuser.*

- *Either: air conditioning shall be provided; or a high air flow rate setting shall provide at least 15 air changes per hour (ACH) in the principal living space and at least 5 CH in all other habitable spaces.*
- *At the same time as meeting the above requirement in b), the sound of the system shall not exceed 40dB LA31(30s) in the principal living space and 35dB LAeq(e0s) in all other habitable spaces, when measured 1.0m away from any grille or diffuser.*
- *The internal air pressure shall be no more than 10 Pa above ambient air pressure due to the mechanical ventilation.*
- *Where a high air flow rate setting is provided, the system shall be controllable by the occupants to be able to alter the ventilation rate with at least three equal stages up to the high setting.*

'Any new building developed for a noise sensitive activity within these sites shall comply with Class C vibration limits in NS 8176E:2005.'

'These conditions specified in this consent notice do not apply to non-residential, unattached structures (such as garages and sheds) which may be erected within the stated set back area.'

'The property owner shall recognise that the property is located adjacent to the Main South Line. The lawful operation of this railway line may result in the occupier experiencing noise and vibration effects. The owners of the land acknowledge that these effects are typical of living near the Main South Line and will not therefore make complaints to the Dunedin City Council or any other party concerning such effects arising from the lawful operation of the Main South Line.'

q) *That a consent notice shall be prepared for registration on the title of Lot 105 for the following on-going conditions:*

'That this site shall be owned by the developer of the Owhiro Park subdivision (issued resource consent SUB-2014-91 on 27 February 2015, and taking into account any subsequent variations of consent), or the Council, or shall be held in common ownership with an immediately adjacent property.'

'That the purpose of this lot is for use as legal access to Lot 9 DP 254 (CFR OT14D/242), or more generally speaking, the land to the east of the Owhiro Park residential subdivision. The full extent of this lot may be vested as legal road in the future if needed to serve development to the east, and shall be formed to the normal road standard at that time at the expense of the subdivider or developer. The Council shall decide if Lot 105 is to be vested as legal road at the time of resource consent for any development proposal for Lot 9 DP 254 or part thereof.'

'The owner of Lot 105 shall not require the Dunedin City Council to share in the responsibility or expense of maintaining the land or any infrastructure, including fences, within the lot. The full share of any expenses relating to this lot shall be the responsibility of the land owner.'

'That, until the Council requires Lot 105 to be actively utilised as access to the land to the east, the land of Lot 105 can be used

by the landowner for gardening, landscaping, amenity, and/or any other residential land use activity that does not include the establishment of permanent structures on the site. It may also be used for private access to Lot 9 DP 254 for any permitted or consented activity occurring on this neighbouring land.'

r) The subdivider shall provide to Council 'as-built' plans and information detailing all engineering works completed in relation to or in association with this subdivision.

Such "as-built" plans of:

(i) the water reticulation pipes laid within the subdivision shall include the locations of hydrants, valves, pipelines, service connections and manifold box installations and details of the pipeline materials and depth of cover over the pipelines. Written confirmation shall also be given that only approved materials have been used in the construction of the water reticulation in the subdivision.

(ii) the foul and stormwater system shall show laterals for each lot.

Stage 3 ('Stage 4' in Council's system): Subdivision of Lot 97 Stage 2 into Lots 57 to 81, Lot 107 (road to vest), Lots 110 & 111 (pedestrian walkway) and Lot 112 (access leg-in):

9. *The proposal shall be given effect to generally in accordance with the revised plan prepared by Paterson Pitts Group entitled, 'Owhiro Part Subdivision Layout Plan for Consent Variation – Stage 3 Subdivision Layout,' dated 8 May 2015, and the information submitted as part of SUB-2014-91 received by Council on 27 June 2014, and the further information received at Council on 18 December 2014 and the applicant's written right of reply received at Council on 12 February 2015, and the variation SUB-2014-91/B received at Council on 18 May 2015, except where modified by the following:*

10. *Prior to certification of the survey plan pursuant to section 223 of the Resource Management Act 1991, the applicant shall ensure the following:*

a) If a requirement for any easements for services is incurred during the survey then those easements shall be granted or reserved and included in a Memorandum of Easements on the survey plan.

b) That Right of Way E shall be duly created or reserved over new Lot 65 in favour of Lots 64, 66 and 103 (Stage A), and shall be shown on the plan in a Memorandum of Easements. It shall have a minimum legal width of 6.0m where serving four or more residences, and a minimum legal width of 3.5m where serving three or fewer residences.

c) That Lot 107 shall be shown on the plan as vesting with Council as road. It shall have a minimum legal width of 16.0m.

d) That Lots 110 and 111 shall be shown on the plan as access ways. Their legal widths shall be determined in consultation with Transportation.

e) That Lot 112 shall be shown on the plan as being at least 4.5m wide.

f) That the following amalgamation condition shall be shown on the survey plan:

'That Lot 112 hereon shall be transferred to the owners of Lot 1 DP 18209 (CFR OT9A/1245), and that one computer freehold

register be issued to include both parcels (See CSN Request 1292834).'

11. *Prior to certification pursuant to section 224(c) of the Resource Management Act 1991, the applicant shall complete the following:*

a) The subdividing owner of the land shall provide a letter to the Council advising who their representative shall be for the design and execution of the engineering works required in association with this subdivision and shall confirm that this representative will be responsible for all aspects of the works covered under NZS4404:2004 "Code of Practice for Urban Land Subdivision" in relation to this development.

Construction Period

b) All construction work on the site shall be designed and conducted to ensure that construction noise does not exceed the noise limits in the following table.

Time of Week	*Time Period*	*Leq (dBA)*	*L max(dBA)*
Weekdays	*0730-1800*	*75*	*90*
	1800-2000	*70*	*85*
	2000-0730	*45*	*75*
Saturdays	*0730-1800*	*75*	*90*
	1800-2000	*45*	*75*
	2000-0730	*45*	*75*
Sundays and public holidays	*0730-1800*	*55*	*85*
	1800-2000	*45*	*75*

Sound levels shall be measured and assessed in accordance with the provisions of NZS 6803: 1999 Acoustics – Construction noise. Please Note: the lower noise limits on Sundays and Public Holidays may mean that no construction work can occur on these days.

Water Supply

c) An "Application for Water Supply – New Service" shall be submitted to the Water and Waste Services Business Unit for approval to establish new water connections to each unserviced residential lot. Details of how each new lot is to be serviced for water shall accompany the application.

d) Upon approval by the Water and Waste Services Business Unit, water service connections shall be installed in accordance with the requirements of Section 6.6.2 of the Dunedin Code of Subdivision and Development 2010.

e) The stormwater management for Stage 3 of the subdivision shall be undertaken in accordance with the approved Stormwater Management Plan of condition 5(i) above. If individual on-site stormwater retention is to be installed on each new lot, a consent notice shall be prepared for registration on the title of Lots 57 to 81 for the following on-going condition:

> *'Prior to residential activity being established on this site, a stormwater retention tank, to retain all stormwater run-off from roof and any hard stand area surface, shall be installed. The tank shall have a minimum storage capacity of 3000 litres, or another volume as agreed with the Water and Waste Services Business Unit at the Dunedin City Council. Primary*

discharge shall be through a restricted aperture located near the invert of the tank, which shall be specifically designed to pass 0.5 litres per second. Secondary discharge shall be by way of a standard 100mm diameter drain installed at the top of the tank which shall provide an escape route for water during extreme rainfall events.'

Foul Sewer Services

f) That all wastewater infrastructure for Stage 3 shall be installed in accordance with Section 5 of the Dunedin Code of Subdivision and Development 2010, unless specifically authorised by the Network Engineer, Water and Waste Services Business Unit.

Erosion and Sediment Control

g) That all practicable measures shall be used to mitigate erosion and to control and contain sediment-laden stormwater run-off from the site during any stages of site disturbance that may be associated with this subdivision.

Transportation

h) Detailed engineering plans, including cross sections, showing the details of the construction of the new roading within Lot 107 shall be submitted to, and approved by, the Group Manager Transportation, in consultation with the Group Manager Parks, Recreation and Aquatics, prior to construction.

i) Upon completion of construction of the new road, all works shall be tested to demonstrate that they meet the acceptance requirements of the Dunedin Code of Subdivision and Development 2010.

j) Right of Way E shall be formed to a minimum width of 4.5m where serving four or more residential units, and 3.0m where serving three or fewer residential units, and be hard surfaced and adequately drained for its duration.

k) Lot 110 shall be formed in accordance with the widths specified in Rule 20.5.7(v)(b) of the District Plan, and be hard surfaced and adequately drained.

General

l) That a 1.8m high fence shall be constructed along the railway boundary of Lots 57 to 65, and including Lot 111 (i.e. there shall be no gap in fencing along the full length of the railway boundary of the entire subdivision), to prevent pedestrians crossing the railway line. The fence shall also extend along the southwest boundary of Lot 65 up to the right of way to Lot 103.

m) That a consent notice be prepared for registration on the titles of Lots 57 to 65 for the following on-going condition:

> *'All buildings, balconies and decks on this site shall be set back from the boundary with the railway corridor by a minimum of 10.0m.'*
>
> *'Buildings shall be designed, constructed and maintained to ensure the following internal design noise limits are not exceeded, and shall take into account future use of the Main South Railway Line by the addition of 3dB to existing measured or calculated sound levels.'*

Receiving Environment (New, relocated or altered)	***Criterion***
Residential - Bedrooms	*35 $dB_{LAeq,\ 1\ hour}$*
Residential – Habitable Spaces	*40 $dB_{LAeq,\ 1\ hour}$*
Primary Outdoor Amenity Areas	*60 $dB_{LAeq,\ 1\ hour}$*

'Where it is necessary to have windows closed to achieve the acoustic design requirements above, an alternative ventilation system shall be installed to provide thermal comfort. To achieve thermal comfort, the following requirements for a ventilation system are recommended:

- *A quantity of air shall be provided to achieve the requirements of Clause G4 of the New Zealand Building Code. At the same time as meeting this requirement, the sound of the system shall not exceed 30dB LAeq(30s) when measured 1.0m away from any grille or diffuser.*
- *Either: air conditioning shall be provided; or a high air flow rate setting shall provide at least 15 air changes per hour (ACH) in the principal living space and at least 5 CH in all other habitable spaces.*
- *At the same time as meeting the above requirement in b), the sound of the system shall not exceed 40dB LA31(30s) in the principal living space and 35dB LAeq(e0s) in all other habitable spaces, when measured 1.0m away from any grille or diffuser.*
- *The internal air pressure shall be no more than 10 Pa above ambient air pressure due to the mechanical ventilation.*
- *Where a high air flow rate setting is provided, the system shall be controllable by the occupants to be able to alter the ventilation rate with at least three equal stages up to the high setting.*

'Any new building developed for a noise sensitive activity within these sites shall comply with Class C vibration limits in NS 8176E:2005.'

'These conditions specified in this consent notice do not apply to non-residential, unattached structures (such as garages and sheds) which may be erected within the stated set back area.'

'The property owner shall recognise that the property is located adjacent to the Main South Line. The lawful operation of this railway line may result in the occupier experiencing noise and vibration effects. The owners of the land acknowledge that these effects are typical of living near the Main South Line and will not therefore make complaints to the Dunedin City Council or any other party concerning such effects arising from the lawful operation of the Main South Line.'

n) The subdivider shall provide to Council 'as-built' plans and information detailing all engineering works completed in relation to or in association with this subdivision.

Such "as-built" plans of:

(i) the water reticulation pipes laid within the subdivision shall include the locations of hydrants, valves, pipelines, service connections and manifold box installations and details of the pipeline materials and depth of cover over the pipelines. Written confirmation shall also be given that only approved

materials have been used in the construction of the water reticulation in the subdivision.

(ii) the foul and stormwater system shall show laterals for each lot.

Land Use LUC-2014-323 (as varied by LUC-2014-323/A)

That pursuant to section 34A(1) and 104C and after having regard to section 104 of the Resource Management Act 1991, the Dunedin City Council ***grants*** *consent to a* ***restricted discretionary*** *activity being the creation of ~~a~~ new lots with no access or frontage to legal road at Lots 99, 103 and 104 SUB-2014-91/B, at 67 and 67A Gladstone Road North, Mosgiel, subject to conditions imposed under section 108 of the Act as follows:*

a) *The proposal shall be given effect to generally in accordance with the revised plan prepared by Paterson Pitts Group entitled, 'Owhiro Park Subdivision Layout Plan Overall Subdivision Layout,' and the information submitted as part of LUC-2014-323 received by Council on 17 June 2014, and the information submitted as part of the variation LUC-2014-323/A received by Council on 18 May 2015, except where modified by the following:*

b) *That a covenant holding Lot 104 with an adjoining title having physical and legal access shall be entered into between the developer and the Council prior to the completion of Stage 1 of SUB-2014-91/B.*

c) *That compliant legal vehicle access shall be provided for Lot 103 to Lot 107 at the time of Stage 3 SUB-2014-91/B.*

d) *Lot 99 shall not be used for residential purposes until such time as either legal and practical access is established to this lot, or Lot 99 is held with an adjoining property having legal and practical access, and until such time as Lot 99 is provided with adequate water supply and drainage.*

Advice Notes

1. In addition to the conditions of a resource consent, the Resource Management Act establishes through sections 16 and 17 a duty for all persons to avoid unreasonable noise, and to avoid, remedy or mitigate any adverse effect created from an activity they undertake. A similar responsibility exists under the Health Act 1956.

2. The lapse period specified above may be extended on application to the Council pursuant to section 125 of the Resource Management Act 1991.

3. It is the consent holder's responsibility to comply with any conditions imposed on their resource consent prior to and during (as applicable) exercising the resource consent. Failure to comply with the conditions may result in prosecution, the penalties for which are outlined in section 339 of the Resource Management Act 1991.

4. This is resource consent. Please contact the Building Control Office, Development Services, about the need for building consent for any construction work as part of the subdivision.

5. The Water and Waste Services Business Unit require that the installation and connection of new water reticulation to the existing public water system shall be carried out after the consent holder has completed and submitted an 'Application for Water Supply' form to the Council and following the consent holder's acceptance of the quote for the required work (as per the Dunedin City Council's Terms and Conditions for the Supply of Water and the Dunedin City Council Code of Subdivision (Part 4)). A quote for the required work must be obtained from an approved water supply connection installer (AWSCI). The list of AWSCI's, application form and the full

process can be found here http://www.dunedin.govt.nz/services/water-supply/new-water-connections.

6. The consent holder is to ensure that all practicable measures are used to mitigate erosion and to control and contain sediment-laden stormwater run-off from the site during any stages of site disturbance that may be associated with this subdivision.

7. The following documentation is recommended as best practice guidelines for managing erosion and sediment –laden run-off and for the design and construction of erosion and sediment control measures for small sites:

   - ARC Technical Publication No. 90 Erosion and Sediment Control Guidelines for Land Disturbing Activities in the Auckland Region, March 1999.
   - Environment Canterbury, 2007 'Erosion and Sediment Control Guidelines for the Canterbury Region" Report No. CRCR06/23.
   - Environment Canterbury, 2007 "Erosion and Sediment Control Guidelines for Small Sites."

8. All aspects relating to the availability of the water for fire-fighting should be in accordance with SNZ PAS 4509:2008, being the Fire Service Code of Practice for Fire Fighting Water Supplies, unless otherwise approved by the New Zealand Fire Service. Any new development must be within 135m of a fire hydrant, otherwise the proposal will be non-compliant with fire-fighting requirements.

9. Parts 4, 5 and 6 (Stormwater Drainage, Wastewater and Water Supply) of the Dunedin Code of Subdivision and Development 2010 must be complied with.

10. It is advised that any drainage issues and requirements (including the necessary works) will be addressed via the building consent process.

11. Certain requirements for building on this land may be stipulated via the building consent process, and are likely to include the following points:
    - For sites level with or above the road, the finished floor level of any building is to be a minimum of 150mm above the crown of the road.
    - For sites below the road, the finished floor level is to be no less than 150mm above the lowest point on the site boundary. Surface water is not to create a nuisance on any adjoining properties.
    - For secondary flow paths, the finished floor level shall be set at the height of the secondary flow plus an allowance for free board.
    - As required by the New Zealand Building Code E1.3.2, surface water resulting from an event having a 2% probability of occurring annually, shall not enter buildings. The finished floor level shall be set accordingly.

12. This consent does not address any earthworks for this subdivision associated with the development of the new roads, access lots, new lots, or the formation of any new access, manoeuvring areas, or retaining walls. Should earthworks on-site breach the performance standards of Section 17 of the District Plan, further consent will be required. Land use consent may also be required for any structures, such as retaining walls supporting fill or surcharge, near to boundaries.

13. Parking and on-site manoeuvring will be assessed for development on each new lot at the time of building consent or resource consent application.

14. It is recommended that a formal agreement be drawn up between the owners and users of the access lots to clarify the responsibilities for the maintenance of the access lots.

15. It is advised that the vehicle access from the carriageway to the property boundary is over road reserve and is therefore required to be constructed in accordance with the

Dunedin City Council Vehicle Entrance Specification (available from Transportation Operations).

16. It is recommended that, if the property owners of 110 and/or 114 Hagart-Alexander Drive have concerns about possible damage to their properties during the construction phase of the subdivision works, they take the opportunity to meet with the developer on their sites prior to construction works commencing with a view to recording the present state of the properties. The developer should also be able to initiate an inspection of their properties prior to works commencing. Council is prepared to hold these records, but will not be involved in any subsequent agreement or dispute that may result between the parties.

17. It is advised that the Council does not share responsibility for the maintenance of fences on front boundaries or reserve land. The developer has offered to pay 50% of the maintenance costs of the new fencing for 110 and 114 Hagart-Alexander Drive during the period of subdivision works only (i.e. up to the signing of the s224(c) certificate of Stage 3 of SUB-2014-91/B or any subsequent variation of this consent). This offer does not extend to the period of development of the new lots. The Council will not be involved in administering this work or in any dispute that may result between the parties.

~~Issued at Dunedin this 27 February 2015.~~
~~Re-issued at Dunedin pursuant to section 127 this 16 June 2015.~~
Re-issued at Dunedin pursuant to section 127 this 27 November 2015.

Lianne Darby
Planner

COPY OF PLANS: Not to Scale

NOTES:

ALLOTMENT PURPOSES:

Lots 1-81 are for normal residential sites.

Lots 100, 101 & 105-107 are for Legal Road (public).

Lots 102 & 108-111 are for Reserve (public).

Lot 103 is a large residual residential site (to be retained by the existing landowner).

Lot 104 is a large residential site to be transferred to an adjoining owner (Brooklands Village).

Lot 112 is a leg-in access corridor to be transferred to an adjoining owner (#69 Gladstone Road North).

EASEMENT PURPOSES:

Easements 'B1' and 'B2' are existing access and service easements over new Lots 103 and 104 respectively. These are dominant to #69 Gladstone Road North.

Easement 'C' is a new access and service easement over new Lot 25. This is dominant to Lots 19, 21, 22 & 26-29.

Easement 'D' is a new access and service easement over new Lot 53. This is dominant to Lots 54 & 55.

Easement 'E' is a new access and service easement over new Lot 65. This is dominant to Lots 64, 66 & 103.

Easement 'F' is a new access and service easement over new Lot 37. This is dominant to Lot 36.

Easement 'G' is a service easement over the adjoining DCC Reserve land. This is dominant in gross to DCC.

ACCESS COVENANTS:

Lots 99 and 104 to be subject to a covenant between the developer and the Council to prevent these sites from being used for residential purposes until such time as either i) legal and practical access is directly established, or ii) these sites are legally connected to an adjacent property that already enjoys legal and practical access.

LOTS 1-81 AND 100-112 BEING A PROPOSED SUBDIVISION LOT 1 DP 18047, LOT 23 DP 17999 AND PT SEC 4 BLOCK II EAST TAIERI SURVEY DISTRICT

STAGE A SUBDIVISION LAYOUT

PATERSONPITTS GROUP
Surveying • Planning • Engineering

DUNEDIN

MINARET RESOURCES LIMITED
OWHIRO RIVER LIMITED
HAGART-ALEXANDER DRIVE

OWHIRO PARK
SUBDIVISION LAYOUT PLAN
FOR CONSENT VARIATION

A3 | 1:2,000 | DO NOT SCALE

D14037 - 01 | 2 of 8 | E | 8/05/2015

NOTES

ALLOTMENT PURPOSES:

Lots 1-81 are for normal residential sites.

Lots 100, 101 & 105-107 are for Legal Road (public).

Lots 102 & 108-111 are for Reserve (public).

Lot 103 is a large residual residential site (to be retained by the existing landowner).

Lot 104 is a large residential site to be transferred to an adjoining owner (Brooklands Village).

Lot 112 is a leg-in access corridor to be transferred to an adjoining owner (869 Gladstone Road North).

EASEMENT PURPOSES:

Easements 'B1' and 'B2' are existing access and service easements over new Lots 103 and 104 respectively. These are dominant to 869 Gladstone Road North.

Easement 'C' is a new access and service easement over new Lot 25. This is dominant to Lots 19, 21, 22 & 26-29.

Easement 'D' is a new access and service easement over new Lot 53. This is dominant to Lots 54 & 55.

Easement 'E' is a new access and service easement over new Lot 65. This is dominant to Lots 64, 66 & 103.

Easement 'F' is a new access and service easement over new Lot 37. This is dominant to Lot 36.

Easement 'G' is a service easement over the adjoining DCC Reserve land. This is dominant in gross to DCC.

LOTS 1-81 AND 100-112 BEING A PROPOSED SUBDIVISION OF LOT 1 DP 18347, LOT 23 DP 17069 AND PT SEC 4 BLOCK II EAST TAIERI SURVEY DISTRICT

STAGE 1 SUBDIVISION LAYOUT

PATERSONPITTSGROUP
Surveying • Planning • Engineering

DUNEDIN
Level 2, Otago Place
PO Box 1933
Dunedin 9054
T 03 477 7846
F 03 474 0274
E dunedin@patersonpitts.co.nz

MINARET RESOURCES LIMITED
OWHIRO RIVER LIMITED
HAGART-ALEXANDER DRIVE

OWHIRO PARK
SUBDIVISION LAYOUT PLAN
FOR CONSENT VARIATION

Surveyed	PG	Paper size	Scale
Designed	DR / GM	A3	1:2,000
Drawn	GB		DO NOT SCALE
Checked	PG		
Approved	GM		
Job No	Sheet No	Revision	Date Created
D14867 - 01	3 of 8	E	16/05/2015

NOTES:

ALLOTMENT PURPOSES:

Lots 1-81 are for normal residential sites.

Lots 100, 101 & 105-107 are for Legal Road (public).

Lots 102 & 108-111 are for Reserve (public).

Lot 103 is a large residual residential site (to be retained by the existing landowner).

Lot 104 is a large residential site to be transferred to an adjoining owner (Brooklands Village).

Lot 112 is a leg-in access corridor to be transferred to an adjoining owner (#69 Gladstone Road North).

EASEMENT PURPOSES:

Easements 'B1' and 'B2' are existing access and service easements over new Lots 103 and 104 respectively. These are dominant to #69 Gladstone Road North.

Easement 'C' is a new access and service easment over new Lot 25. This is dominant to Lots 19, 21, 22 & 26-29.

Easement 'D' is a new access and service easment over new Lot 53. This is dominant to Lots 54 & 55.

Easement 'E' is a new access and service easment over new Lot 65. This is dominant to Lots 64, 66 & 103.

Easement 'F' is a new access and service easment over new Lot 37. This is dominant to Lot 36.

Easement 'G' is a service easment over the adjoining DCC Reserve land. This is dominant in gross to DCC.

LOTS 1-81 AND 100-112 BEING A PROPOSED SUBDIVISION
LOT 1 DP 18347, LOT 23 DP 17899 AND PT SEC 4 BLOCK II
EAST TAIERI SURVEY DISTRICT

STAGE 2 SUBDIVISION LAYOUT

PATERSONPITTS GROUP
Surveying • Planning • Engineering

MINARET RESOURCES LIMITED
OWHIRO RIVER LIMITED
HAGART-ALEXANDER DRIVE

OWHIRO PARK
SUBDIVISION LAYOUT PLAN
FOR CONSENT VARIATION

A3		1:2,000	
		DO NOT SCALE	
D14687 - 01	4 of 6	E	8/03/2016

NOTES:

ALLOTMENT PURPOSES:

Lots 1-61 are for normal residential sites.

Lots 100, 101 & 105-107 are for Legal Road (public).

Lots 102 & 108-111 are for Reserve (public).

Lot 103 is a large residual residential site (to be retained by the existing landowner).

Lot 104 is a large residential site to be transferred to an adjoining owner (Brooklands Village).

Lot 112 is a leg-in access corridor to be transferred to an adjoining owner (#69 Gladstone Road North).

EASEMENT PURPOSES:

Easements 'B1' and 'B2' are existing access and service easements over new Lots 103 and 104 respectively. These are dominant to #69 Gladstone Road North.

Easement 'C' is a new access and service easment over new Lot 25. This is dominant to Lots 19, 21, 22 & 26-29.

Easement 'D' is a new access and service easment over new Lot 53. This is dominant to Lots 54 & 55.

Easement 'E' is a new access and service easment over new Lot 65. This is dominant to Lots 64, 66 & 103.

Easement 'F' is a new access and service easment over new Lot 37. This is dominant to Lot 36.

Easement 'G' is a service easment over the adjoining DCC Reserve land. This is dominant in gross to DCC.

LOTS 1-61 AND 100-112 BEING A PROPOSED SUBDIVISION LOT 1 DP 18947, LOT 23 DP 17999 AND PT SEC 4 BLOCK II EAST TAIERI SURVEY DISTRICT

STAGE 3 SUBDIVISION LAYOUT

PATERSONPITTSGROUP
Surveying • Planning • Engineering

DUNEDIN

MINARET RESOURCES LIMITED
OWHIRO RIVER LIMITED
HAGART-ALEXANDER DRIVE

OWHIRO PARK
SUBDIVISION LAYOUT PLAN
FOR CONSENT VARIATION

43

1:2,000

DO NOT SCALE

D14667 - 31

5 of 8

E

8/05/2015

9 March 2017

Minaret Resources Limited
C/- Kurt Bowen
Paterson Pitts Group
PO Box 5933
Moray Place
Dunedin 9058

Dear Kurt

RESOURCE CONSENT APPLICATION: SUB-2014-91/D
VARYING SUB-2014-91/C
(LUC-2014-323/A INCLUDED)
67 & 67A GLADSTONE ROAD NORTH
112 HAGART ALEXANDER DRIVE
ESPLANADE RESERVE
MOSGIEL

Your application for the variation of SUB-2014-91/C by making it a two-stage subdivision with fewer residential lots, and by addressing changes in overland stormwater flow requirements, lodged pursuant to section 127 of the Resource Management Act 1991 was processed on a non-notified basis in accordance with sections 95A to 95G of the Resource Management Act 1991. In considering sections 95A to 95G, it was determined that any adverse effects would be no more than minor, there were no potentially affected parties for the application, and that there were no special circumstances in relation to the proposal. Therefore, public notification of the application was not required. The application was considered by a Senior Planner under delegated authority on 9 March 2017.

I advise that the Council has **granted** the request for a change of conditions to the consent. The full text of the decision commences on the attached certificate.

BACKGROUND TO APPLICATION

Resource consent SUB-2011-91, for the subdivision of the above sites into 81 residential lots, roading, and reserve, and land use consent LUC-2014-323 for the creation of a new lot with no access or frontage to legal road, was processed on a limited notified basis. The applications were granted on 27 February 2015, subject to conditions of consent.

The subject sites are:

- 67 Gladstone Road North, legally described as Part Section 4 Block II East Taieri Survey District (CFR OT258/263 Ltd – Part Cancelled). The title shows the area to be 20.3582ha, but the part-cancellation of this title removed 15.7170ha from the site in 1974 leaving an area of 4.6412ha. Council's cadastral layer of GIS shows it to have an area of 4.733ha;
- 67A Gladstone Road North, legally described as Lot 1 Deposited Plan 18347 (CFR OT9C/1038), with an area of 2.8443ha;
- 112 Hagart-Alexander Drive, legally described as Lot 23 Deposited Plan 17999 (CFR OT13B/881), with an area of 696m^2; and

- Esplanade Reserve, legally described as Lot 2 Deposited Plan 18347 (CFR OT18A/955), having an area of 9279m^2.

SUB-2014-91/A was an objection to the fees charged for the consent.

SUB-2014-91/B and LUC-2014-323/A were issued on 16 June 2015 as variations of the original consent. SUB-2014-91/B staged the subdivision in to four stages, and changed the layout of the subdivision as follows:

- The introduction of a cul-de-sac to replace a proposed right of way in favour of ten users.
- New Lot 105, to vest as road with Council, to facilitate future access to the land on the northeast if so needed.
- New Lots 108 and 110, being pedestrian links between the loop road and the cul-de-sac.
- New Lot 109, being the central island of the cul-de-sac.
- New Lot 111, being a pedestrian access to the Main South Railway Line rail corridor.
- New Lot 112, being a proposed access for Lot 1 DP 18209 (69 Gladstone Road North) to provide this existing property with legal access.

LUC-2014-323/A was varied to recognise the changes to the subdivision consent.

Resource consent LUC-2015-389 was issued on 30 September 2015 for earthworks associated with the subdivision development.

A second variation to the subdivision consent was issued as SUB-2014-91/C on 30 November 2015. The variation changed the status of proposed Lot 105 from road reserve to a fee-simple lot in private ownership.

Stage A of SUB-2014-91/C, creating Lot 104 (for transfer to Brooklands Village), Lot 103 (being the existing house site) and Lot 99 (balance land) has been completed and a new subdivision plan DP 488615 issued. The subject site of Stage 1 is now Lot 99 DP 488615 (CFR 701216), Lot 23 DP 17999 (CFR OT13B/881) and Lot 2 DP 18347 (Esplanade Reserve – CFR OT18A/955).

The existing dwelling of 1112 Hagart-Alexander Drive has been removed.

CURRENT APPLICATION

The applicant now seeks to make the following changes to the subdivision consent:

- Restructuring of the consent to make the remaining subdivision a two-stage consent;
- Reduction of the number of residential sites by five;
- Reduction of the road and utility lots to suit the new staging; and
- Introduction of a new condition regarding the on-going protection of stormwater overland flow paths.

The replacement plan not only changes the staging of the subdivision but varies the layout of the new lots in a number of places. This results in changes to some easements. The lot numbering has also changed so that Stage 1 creates Lots 1 to 39, and Stage 2, Lots 40 to 76.

REASONS FOR APPLICATION

Section 127(1) of the Resource Management Act 1991 states:

> *The holder of a resource consent may apply to a consent authority for a change or cancellation of a condition of the consent (other than any condition as to the duration of the consent).*

Section 127(3) of the Act states that *"Sections 88 to 121 apply, with all necessary modifications as if –*

a) the application were an application for a resource consent for a discretionary activity; and

b) the references to a resource consent and to the activity were references only to the change or cancellation of a condition and the effects of the change or cancellation respectively.

Affected Persons

Section 127(4) of the Act states that *"For the purposes of determining who is adversely affected by the change or cancellation, the local authority must consider, in particular, every person who –*

a) made a submission on the original application; and
b) may be affected by the change or cancellation."

The original application was processed on a limited notified basis, with the owners and occupiers of 110 and 114 Hagart Alexander Drive being considered affected parties to the subdivision proposal because of an introduction of a new road where there is currently a residential property. The consent was granted, and there were no appeals to the decision.

The proposed variation does not have any additional effects on these parties as there will be no changes to the subdivision entranceway onto Hagart-Alexander Drive, and no intensification of the residential development occurring. No other persons are considered to be adversely affected by this proposal for the reasons discussed below in the section on the effects on the environment.

As stated in section 127(3)(a) of the Resource Management Act 1991, the application is a **discretionary activity**.

Proposed Second Generation Dunedin City District Plan ("Proposed Plan")

The Proposed 2GP was notified on 26 September 2015. Section 88A of the Resource Management Act determines that the activity status of the application (detailed in Section 127(3)(a) above) remains unaltered.

PLANNING ASSESSMENT

The survey plans for the Stages 1 to 3 of the subdivision have not yet been certified under section 223 or 224(c) of the Resource Management Act 1991. Accordingly, the Council is able to consider the application under section 127(1)(a) of the Resource Management Act 1991.

ASSESSMENT OF EFFECTS ON ENVIRONMENT

Effects on the Environment

1. Lot Size and Dimensions (18.6.1(q)) and Physical Limitations (18.6.1(k))

   The proposed variation will create 76 residential lots over two stages rather than 81 residential lots over three stages. The residential lots will all meet the minimum lot size for the Residential 1 zone, and have complying legal and physical access even if not all lots will have frontage to legal road.

   The proposed variation does not change the layout significantly from SUB-2014-91/D. The roading layout is almost identical. The new residential lots will be, on average, slightly larger than before, and all will be over 500m^2. The lots which have been removed were scattered across the development, so their removal has, in effect, eased the residential lot density and has not obviously left any gaps. Lot 102, containing the stormwater management area, will be reduced in size but will provide the same stormwater retention capacity as before. The overall changes to the layout are considered to be minor and within the scope of the original consented layout.

2. Easements (18.6.1(i))

Easements for services and access will be created as before, with a few changes. The changes arise from the varied boundaries of the proposed lots which mean that not all easements are still needed. All lots will still have legal and physical access, and can be fully serviced.

3. Effects on Infrastructure, and the National Grid (17.8.8 and 17.8.9)

The proposed variation will not alter the proposed servicing of the subdivision except that the number of residential units to be served is to be reduced by five.

The applicant has identified three locations where overland stormwater flows are expected to impact on some of the new lots. These are at the corners of Lots 1 and 39 next to the new bridge over the Owhiro Stream, and along the northeast boundaries of Lots 50 to 52 and 105. The applicant seeks to have these routes, or any other locations where there prove to be overland flow paths, protected and managed by consent notices or covenants. This is considered acceptable as overland flow paths should be addressed on an on-going basis in order to minimise the risk of flooding.

4. Transportation (18.6.1(c))

The roading layout will be almost identical to that previously consented with a few variations in respect to the shape of the proposed road reserve, but not the roading itself. Right of way easements will remain similar to those proposed previously except that the change in lot numbering will result in changes to the relevant conditions accordingly. There is no longer any need for a right of way over Lot 53 in favour of Lot 54 as the latter lot will have its own frontage with the revised layout.

5. Amenity Values (8.13.5)

The proposal is for residential sites in a residential area, and accordingly, the effects of the proposal on amenity values are largely anticipated by the zoning of the site. The proposal will create 76 residential lots complying with minimum lot size, so the density of development will be compliant with the Residential 1 zone rules. The proposed variation will have effects on amenity values and the character of the area which are anticipated by the zoning of the land.

DECISION

SUB-2014-91/C

That pursuant to sections 34(A) and 127(1) of the Resource Management Act 1991 and after having regard to section 104 of the Act, the Dunedin City Council ***grants*** *consent to the discretionary activity of varying SUB-2014-91/C for the subdivision of 67 & 67A Gladstone Road North, 112 Hagart Alexander Drive and Esplanade Reserve by changing the layout of the subdivision and introducing stormwater drainage provisions, and accordingly SUB-2014-91/C is amended to read as shown on the attached certificate.*

LAPSING OF CONSENT

The original consent SUB-2014-91, was for a single stage subdivision, and was given a lapse period of ten years, lapsing on 27 February 2025. SUB-2014-91/B staged the subdivision into three stages. It is usual Council practice to impose a five year lapse period of Stage 1 of staged subdivisions, and ten year lapse periods on subsequent stages (if so requested). The applicant's agent agreed to a five year lapse period for Stage 1. This will also include the preliminary stage, Stage A. Accordingly, Stages A and 1 of SUB-2014-91/B were given the lapse date of 27 February 2020, five years after the issuing of SUB-2014-91, and Stages 2 and 3, 27 February 2025, ten years after the issuing of the original consent. **LUC-2014-323** was given a ten year lapse period. This is considered sufficient considering it will actually address a temporary situation created at Stage A.

The revised staging of this variation does not change the above lapse periods. New **Stage 1 SUB-2014-91/D** will lapse on **27 February 2020**, and **Stage 2 SUB-2014-91/D** will lapse on **27 February 2025**.

COMPLIANCE WITH CONDITIONS

It is the consent holder's responsibility to comply with any conditions imposed on their resource consent prior to and during (as applicable) exercising the resource consent. Failure to comply with the conditions may result in prosecution, the penalties for which are outlined in section 339 of the Resource Management Act 1991.

REASONS FOR DECISION

It is considered appropriate to amend the consent decision for the following reasons:

1. The proposed variation does not fundamentally alter the layout of the subdivision except that it will reduce the number of residential lots being created, and ease the density of development accordingly. The new lots will all be larger than minimum lot size, and will have complying legal and physical access.

2. It is considered appropriate to protect and manage any overland stormwater flow paths using consent notices if necessary.

RIGHTS OF OBJECTION

In accordance with section 357 of the Resource Management Act 1991, the consent holder may object to this decision or any condition within 15 working days of the decision being received, by applying in writing to the Dunedin City Council at the following address:

The Chief Executive
Dunedin City Council
P O Box 5045
Dunedin

Attn: Senior Planner – Enquiries Plaza, Ground Floor

Yours faithfully

Lianne Darby
PLANNER

Consent Type: Section 127 Variation of Conditions

Consent Number: SUB-2014-91/D (being a variation of the subdivision of SUB-2014-91/C)
LUC-2014-323/A is included for completeness sake.

SUB-2014-91/C

That pursuant to sections 34(A) and 127(1) of the Resource Management Act 1991 and after having regard to section 104 of the Act, the Dunedin City Council ***grants*** *consent to the discretionary activity of varying SUB-2014-91/C for the subdivision of 67 & 67A Gladstone Road North, 112 Hagart Alexander Drive and Esplanade Reserve by changing the layout of the subdivision and introducing stormwater drainage provisions.*

The Amended Decision now reads:

Location of Activity: 67 & 67A Gladstone Road North, 112 Hagart-Alexander Drive, & Local Purpose Reserve (Esplanade), Mosgiel

Legal Description: Part Section 4 Block II East Taieri Survey District (CFR OT258/263 Ltd – Part Cancelled), Lot 1 Deposited Plan 18347 (CFR OT9C/1038), Lot 23 Deposited Plan 17999 (CFR OT13B/881), and part of Lot 2 Deposited Plan 18347 (CFR OT18A/955).

Lapse Date: ~~SUB 2014-91/B~~ SUB-2014-91/D: ~~Stages A and~~ Stage 1: 27 February 2020, unless the consent has been given effect to before this date.
~~SUB 2014-91/B~~ SUB-2014-91/D: ~~Stages 2 and 3~~ Stage 2: 27 February 2025, unless the consent has been given effect to before this date.
LUC-2014-323/A: 27 February 2025, unless the consent has been given effect to before this date.

Subdivision SUB-2014-91 (as varied by SUB-2014-91/B, SUB-2014-91/C & SUB-2014-91/D)

That pursuant to section 34A(1) and 104B, and after having regard to Part II matters and sections 104 and 104D of the Resource Management Act 1991, the Dunedin City Council ***grants*** *consent to a* ***non-complying*** *activity being the subdivision of 67 and 67A Gladstone Road North, Mosgiel, being the sites legally described as Part Section 4 Block II East Taieri Survey District (CFR OT258/263 Ltd – Part Cancelled) and Lot 1 DP 18347 (CFR OT9C/1038) into ~~81~~ 76 residential lots, stormwater management lot, roading and balance land, with legal access to be obtained over 112 Hagart-Alexander Drive, legally described as Lot 23 DP 17999 (CFR OT13B/881) and Local Purpose Reserve (Esplanade), legally described as Lot 2 DP 18347 (CFR OT18A/955), subject to the conditions imposed under sections 108 and 220 of the Act, as follows:*

Stage A ('Stage 1' in Council's system): Subdivision of Part Section 4 Block II East Taieri Survey District (CFR OT258/263 Ltd – Part Cancelled) and Lot 1 DP 18347 (CFR OT9C/1038) into Lots 99, 103 and 104.

[Completed]

Stage 1 ('Stage 2' in Council's system): Subdivision of Lot 99 Stage A, Lot 23 Deposited Plan 17999 (CFR OT13B/881) and Lot 2 Deposited Plan 18347 (Esplanade Reserve - CFR OT18A/955) into Lots 1 to ~~31~~ 39, Lots 100 and 101 (road to vest), Lot 102 (Stormwater Management Lot), Lot 112 (access leg-in) and balance land Lot 98:

3. *The proposal shall be given effect to generally in accordance with the revised plan prepared by Paterson Pitts Group entitled, 'Owhiro Part Subdivision Layout Plan for Consent Variation ~~– Stage 1 Subdivision Layout,~~' ~~Revision E, dated 8 May 2015~~, dated 23 February 2017, received with the application for SUB-2014-91/D, and the information submitted as part of SUB-2014-91 received by Council on 27 June 2014, and the further information received at Council on 18 December 2014 and the applicant's written right of reply received at Council on 12 February 2015, and the variation SUB-2014-91/B received at Council on 18 May 2015, and the variation SUB-2014-91/C received at Council on 6 November 2015, and the variation SUB-2014-91/D received at Council on 24 February 2017, except where modified by the following:*

4. *Prior to certification of the survey plan pursuant to section 223 of the Resource Management Act 1991, the applicant shall ensure the following:*

   a) *If a requirement for any easements for services is incurred during the survey then those easements shall be granted or reserved and included in a Memorandum of Easements on the survey plan.*

   b) *That the width of the future legal road between Hagart-Alexander Drive to the south side of the Owhiro Stream shall have a minimum width of 20.0m. This will be comprised of Local Purpose Reserve (Road) and road to vest.*

   c) *That the consent holder shall provide to the Council all documentation necessary to enable the portion of Local Purpose Reserve (Esplanade) to be reclassified as Local Purpose Reserve (Road) in order to achieve legal access to the development. This area shall be generally consistent with the land shown on the application plan as '(A) to become Local Road' except that a strip of Local Purpose Reserve (Esplanade) is to be maintained along the north-eastern edge next to 110 Hagart-Alexander Drive. This strip shall be at least 2.0m wide.*

   d) *That, if land of the present 112 Hagart-Alexander Drive is to be transferred to the owners of 114 Hagart-Alexander Drive, then an additional lot shall be shown on the plan between the present north-eastern side boundary of 114 Hagart-Alexander Drive and the new road. This lot shall be amalgamated with the land of 114 Hagart-Alexander Drive. The legal width of the new road shall not be narrower than 20.0m as a result of the transfer of land.*

   ~~e) That Right of Way C shall be duly created or reserved over new Lot 25 in favour of Lots 19, 21, 22 & 26 – 29, and shall be shown on the plan in a Memorandum of Easements. It shall have a minimum legal width of 6.0m where serving four or more residences, and a minimum legal width of 3.5m where serving three or fewer residences.~~

   f) *That Lots 100 and 101 shall be shown on the plan as vesting with Council as road.*

   g) *That an easement in gross in favour of the Dunedin City Council shall be duly created or reserved over any servicing infrastructure (water, stormwater or wastewater) to be vested with Council which is located within privately owned property, and shall be shown on the plan in a*

Memorandum of Easements in Gross. The easements shall be made in accordance with the relevant section/s of the Dunedin Code of Subdivision and Development 2010.

h) That any easements for drainage to pass over the Local Purpose Reserve (Esplanade) shall be first approved by the Group Manager, Parks, Recreation and Aquatics.

i) That Right of Way E shall be duly created or reserved over new Lot 13 in favour of Lots 12 and 103 (Stage A), and shall be shown on the plan in a Memorandum of Easements. It shall have a minimum legal width of 3.5m.

j) That Lot 112 shall be shown on the plan as being at least 4.5m wide.

k) That the following amalgamation condition shall be shown on the survey plan:

> *'That Lot 112 hereon shall be transferred to the owners of Lot 1 DP 18209 (CFR OT9A/1245), and that one computer freehold register be issued to include both parcels (See CSN Request 1292834).'*

5. *Prior to certification pursuant to section 224(c) of the Resource Management Act 1991, the applicant shall complete the following:*

a) The subdividing owner of the land shall provide a letter to the Council advising who their representative shall be for the design and execution of the engineering works required in association with this subdivision and shall confirm that this representative will be responsible for all aspects of the works covered under NZS4404:2004 "Code of Practice for Urban Land Subdivision" in relation to this development.

Pre-Construction

b) That a site specific geotechnical investigation of the entire subject site (Stages 1, and 2 ~~and 3~~) be undertaken by an appropriately qualified person to determine the potential for amplified movements and liquefaction of soils during significant seismic events. Dynamic cone testing to 10m depth is recommended to classify the potential for liquefaction for each dwelling. The report shall determine whether specifically designed ground improvements works are required. These shall be addressed through the earthworks phase of the project which will require additional resource consent.

c) The consent holder shall provide detailed engineering plans and associated calculations of how the subdivision is to be serviced for water, stormwater and wastewater to the Asset Planning Engineer, Water and Waste Services Business Unit, for approval prior to any works commencing on-site. The engineering plans and associated calculations shall meet the requirements of the Construction Plan Check List.

d) Prior to the commencement of any construction on site, the consent holder shall submit for the approval of the Parks Officer a detailed landscape plan for the southern bank of the Owhiro Stream (local purpose esplanade reserve). This plan shall include plant species and the proposed construction details for the walking track.

Construction Period

e) That the property owners of 110 and 114 Hagart-Alexander Drive shall be notified in writing at least 10 days prior to construction works commencing

on the removal of the house of 112 Hagart-Alexander Drive and again prior to the construction commencing of the new road between Hagart-Alexander Drive and the Owhiro Stream. The letters shall contain information on the general time frames expected for the works.

f) All construction work on the site shall be designed and conducted to ensure that construction noise does not exceed the noise limits in the following table.

Time of Week	*Time Period*	*Leq (dBA)*	*L max(dBA)*
Weekdays	*0730-1800*	*75*	*90*
	1800-2000	*70*	*85*
	2000-0730	*45*	*75*
Saturdays	*0730-1800*	*75*	*90*
	1800-2000	*45*	*75*
	2000-0730	*45*	*75*
Sundays and public holidays	*0730-1800*	*55*	*85*
	1800-2000	*45*	*75*

Sound levels shall be measured and assessed in accordance with the provisions of NZS 6803: 1999 Acoustics – Construction noise. Please Note: the lower noise limits on Sundays and Public Holidays may mean that no construction work can occur on these days.

Water Supply

g) An "Application for Water Supply – New Service" shall be submitted to the Water and Waste Services Business Unit for approval to establish new water connections to each unserviced residential lot. Details of how each new lot is to be serviced for water shall accompany the application.

h) Upon approval by the Water and Waste Services Business Unit, water service connections shall be installed in accordance with the requirements of Section 6.6.2 of the Dunedin Code of Subdivision and Development 2010.

Stormwater Services

i) A Stormwater Management Plan for the entire subdivision (Stages 1, and 2 ~~and 3~~) shall be provided to the Water and Waste Services Manager for approval prior to works commencing. The Stormwater Management Plan shall outline how stormwater from the subdivision will be managed to ensure post-development flows do not exceed pre-development flows, and identify and address any downstream effects of the stormwater generated by the development, including any mitigation required.

j) The stormwater management for Stage 1 of the subdivision shall be undertaken in accordance with the approved Stormwater Management Plan. Either:

- *a consent notice shall be prepared requiring on-site retention tanks to be installed on each new lot. The consent notice shall read as follows in condition 5(k); or*
- *A stormwater retention system which caters for all the lots shall be built on Lot 102. This could be in the form of a retention pond or similar. The details of any combined stormwater retention system shall be approved by the Water and Waste Services Business Unit.*

k) That, if using individual on-site stormwater retention, a consent notice shall be prepared for registration on the residential lots for the following on-going condition:

> *'Prior to residential activity being established on this site, a stormwater retention tank, to retain all stormwater run-off from roof and any hard stand area surface, shall be installed. The tank shall have a minimum storage capacity of 3000 litres, or another volume as agreed with the Water and Waste Services Business Unit at the Dunedin City Council. Primary discharge shall be through a restricted aperture located near the invert of the tank, which shall be specifically designed to pass 0.5 litres per second. Secondary discharge shall be by way of a standard 100mm diameter drain installed at the top of the tank which shall provide an escape route for water during extreme rainfall events.'*

Foul Sewer Services

l) That all wastewater infrastructure for Stage 1 shall be installed in accordance with Section 5 of the Dunedin Code of Subdivision and Development 2010, unless specifically authorised by the Network Engineer, Water and Waste Services Business Unit.

Erosion and Sediment Control

m) That all practicable measures shall be used to mitigate erosion and to control and contain sediment-laden stormwater run-off from the site during any stages of site disturbance that may be associated with this subdivision.

Transportation

n) Detailed engineering plans, including cross sections, showing the details of the construction of the new road (Design A, as submitted in the further information received at Council on 18 December 2014) shall be submitted to, and approved by, the Group Manager Transportation, in consultation with the Group Manager Parks, Recreation and Aquatics, prior to construction.

o) If the property owners of 114 Hagart-Alexander Drive desire to relocate their vehicle entrance to the new road, the consent holder shall install a compliant access between the carriageway of the new road and the existing property boundary of 114 Hagart-Alexander Drive at the consent holder's expense. The existing Hagart-Alexander Drive access to the property shall also be reinstated as kerb and channel and grass up to the edge of the footpath, at the consent holder's expense. The consent holder is not responsible for internal alterations to the layout of the property which might be undertaken.

p) Detailed design of the road intersection of Hagart-Alexander Drive and the new road shall be carried out by a suitably qualified engineer, and shall ensure all safety and efficiency matters are adequately addressed.

q) The proposed bridge or culvert shall be designed so that routine maintenance is able to be undertaken on it without impeding the two-way vehicular road operating conditions.

r) Vegetation with a maximum height of 2.0m shall be established within the new legal road between 110 and 114 Hagart-Alexander Drive. Details of the proposed vegetation shall be submitted to the Resource Consents Manager for approval prior to planting commencing.

s) Upon completion of construction of the new road, all works shall be tested to demonstrate that they meet the acceptance requirements of the Dunedin Code of Subdivision and Development 2010.

t) ~~Right of Way C shall be formed in accordance with the widths specified in Rule 20.5.7(v)(b) of the District Plan, and be hard surfaced and adequately drained for its duration~~. Right of Way E shall be formed to a minimum width of 3.0m, and be hard surfaced and adequately drained for its duration.

Urban Landscape Conservation Area Development

u) That the enhancement of the urban landscape conservation area shall be undertaken in accordance with the approved plans of condition 5(d) above.

v) Any physical works within the reserve area, except for work required to install the new access road shall be undertaken after the completion of the bulk earthworks. This is to ensure the existing vegetation within the reserve is available as a means of sediment control to protect the stream. (Note: the vegetation should not be relied upon as the significant form of sediment control during the earthworks).

w) Prior to the construction of the access road, the consent holder shall submit for the approval of the Parks Officer a landscape and maintenance plan for vegetation on each side of the new road. All landscaping shall be implemented in accordance with the approved plan. The consent holder is expected to maintain the vegetation for a period of five years.

x) The consent holder shall pay Council a $2000 bond for the on-going maintenance over a five year period of the roadside vegetation of condition 5(r) above. The bond will also cover any requirement to replace sick or dying plants.

y) Prior to the commencement of any works on site the consent holder shall submit for the approval of the Parks Officer an erosion and sediment control plan. The plan should demonstrate how the esplanade reserve shall be protected during the earthworks for the project. (Note: this condition is specific to the protection of the esplanade reserve. A more complete plan may be required for other aspects of the development).

z) Prior to the construction of the access road from Hagart-Alexander Drive to the proposed development the consent holder shall submit a plan for the approval of the parks officer showing the access points to all four areas of local purpose esplanade reserve adjoining the access road. The access points shall be a minimum of 2.0m in width and the design shall be suitable for maintenance vehicles and pedestrians.

aa) Prior to the submission of any drainage plans the consent holder must seek the approval of the Parks, Recreation and Aquatics Department for any drains that are proposed to cross the adjacent reserve. Appropriate legal instruments will be required for any drains that cross the reserve. The consent holder shall be responsible for all costs associated with the preparation of the documentation.

General

bb) That prior to construction works commencing on the new road to the development, acoustic fencing shall be attached to the outer side of the existing fencing of 110 and 114 Hagart-Alexander Drive. The fencing shall

be at least as high as the existing fence, but shall be no higher than 2.0m unless the property owners seek a higher fence and resource consent is obtained. Alternatively, if the property owners want a fence of a different design along their boundaries, the consent holder shall contribute to the cost of a new fence of any design up to the value of the acoustic fencing which it is replacing.

cc) That vehicle access shall be formed between Lot 100 (road to vest) and Brooklands Village, to be utilised only in emergencies. A removable barrier or gate shall be erected to prevent casual through-traffic.

dd) That a consent notice shall be registered on the titles of those lots affected by the access of condition ~~5(dd)~~ 5(cc) above, for the following on-going condition:

> *'Vehicle access through this property shall be made available for emergency services and all residents of Brooklands Village and/or the residential lots of [insert name of new road of subdivision] if either Balmoral Avenue or [insert name of new road to subdivision] is blocked because of a natural hazard (such as flooding) or an emergency. This access is only to be used during the period of the blockage.'*

ee) That a consent notice shall be registered on the titles of those lots abutting the esplanade reserve for the following on-going conditions:

> *'All stormwater from the site shall be captured and disposed of to an approved drain. No stormwater is to be drained onto the Council reserve.'*
>
> *'The costs of fencing on any boundary shared with Council shall be met by the property owner.'*
>
> *'All fencing on the reserve boundary shall be restricted to a maximum of 1.2 metres in height or 1.8 metres in height with 40% permeability.'*

ff) The subdivider shall provide to Council 'as-built' plans and information detailing all engineering works completed in relation to or in association with this subdivision.

Such "as-built" plans of:

(i) the water reticulation pipes laid within the subdivision shall include the locations of hydrants, valves, pipelines, service connections and manifold box installations and details of the pipeline materials and depth of cover over the pipelines. Written confirmation shall also be given that only approved materials have been used in the construction of the water reticulation in the subdivision.

(ii) the foul and stormwater system shall show laterals for each lot.

gg) That a 1.8m high fence shall be constructed along the railway boundary of Lots 13 to 21, and including Lot 111 (i.e. there shall be no gap in fencing along the full length of the railway boundary of the entire subdivision), to prevent pedestrians crossing the railway line. The fence shall also extend along the southwest boundary of Lot 13 up to the right of way to Lot 103.

hh) *That a consent notice be prepared for registration on the titles of Lots 13 to 21 for the following on-going condition:*

'All buildings, balconies and decks on this site shall be set back from the boundary with the railway corridor by a minimum of 10.0m.'

'Buildings shall be designed, constructed and maintained to ensure the following internal design noise limits are not exceeded, and shall take into account future use of the Main South Railway Line by the addition of 3dB to existing measured or calculated sound levels.'

Receiving Environment (New, relocated or altered)	***Criterion***
Residential - Bedrooms	*35 $dB_{LAeq,\ 1\ hour}$*
Residential – Habitable Spaces	*40 $dB_{LAeq,\ 1\ hour}$*
Primary Outdoor Amenity Areas	*60 $dB_{LAeq,\ 1\ hour}$*

'Where it is necessary to have windows closed to achieve the acoustic design requirements above, an alternative ventilation system shall be installed to provide thermal comfort. To achieve thermal comfort, the following requirements for a ventilation system are recommended:

- *A quantity of air shall be provided to achieve the requirements of Clause G4 of the New Zealand Building Code. At the same time as meeting this requirement, the sound of the system shall not exceed 30dB LAeq(30s) when measured 1.0m away from any grille or diffuser.*
- *Either: air conditioning shall be provided; or a high air flow rate setting shall provide at least 15 air changes per hour (ACH) in the principal living space and at least 5 CH in all other habitable spaces.*
- *At the same time as meeting the above requirement in b), the sound of the system shall not exceed 40dB LA31(30s) in the principal living space and 35dB LAeq(e0s) in all other habitable spaces, when measured 1.0m away from any grille or diffuser.*
- *The internal air pressure shall be no more than 10 Pa above ambient air pressure due to the mechanical ventilation.*
- *Where a high air flow rate setting is provided, the system shall be controllable by the occupants to be able to alter the ventilation rate with at least three equal stages up to the high setting.*

'Any new building developed for a noise sensitive activity within these sites shall comply with Class C vibration limits in NS 8176E:2005.'

'These conditions specified in this consent notice do not apply to non-residential, unattached structures (such as garages and sheds) which may be erected within the stated set back area.'

'The property owner shall recognise that the property is located adjacent to the Main South Line. The lawful operation of this railway line may result in the occupier experiencing noise and vibration effects. The owners of the land acknowledge that these effects are typical of living near the Main South Line and will not therefore make complaints to the Dunedin City Council or any

other party concerning such effects arising from the lawful operation of the Main South Line.'

hh) That a plan shall be prepared for any lot having a stormwater overland flow path requiring on-going protection and management showing the position of the stormwater overland flow path in relation to the property boundary. The plan shall be attached to the consent notice of condition 5(ii) below:

(ii) That a consent notice shall be prepared for registration on any lot having a constructed stormwater overland flow path passing through its boundaries for the following on-going condition:

> *'This site has a constructed stormwater overland flow path in the location shown on the attached plan. It is the property owner's responsibility to maintain this facility and ensure that this flow path is kept clear of any structures or features which will impede the flow of stormwater through this location.'*

Stage 2 ('Stage 3' in Council's system): Subdivision of Lot 98 Stage 1 into Lots ~~32 to 56~~ 40 to 76, Lot 105, Lot 106 (road to vest), Lots 108, 110 and 111 (pedestrian walkway), Lot 109 (cul-de-sac island~~), and balance land Lot 97~~:

6. *The proposal shall be given effect to generally in accordance with the revised plan prepared by Paterson Pitts Group entitled, 'Owhiro Part Subdivision Layout Plan for Consent Variation' ~~Stage 2 Subdivision Layout,' dated 8 May 2015~~, dated 23 February 2017, received with the application for SUB-2014-91/D, and the information submitted as part of SUB-2014-91 received by Council on 27 June 2014, and the further information received at Council on 18 December 2014 and the applicant's written right of reply received at Council on 12 February 2015, and the variation SUB-2014-91/B received at Council on 18 May 2015, and the variation SUB-2014-91/C received at Council on 6 November 2015, and the variation SUB-2014-91/D received at Council on 24 February 2017, except where modified by the following:*

7. *Prior to certification of the survey plan pursuant to section 223 of the Resource Management Act 1991, the applicant shall ensure the following:*

   a) If a requirement for any easements for services is incurred during the survey then those easements shall be granted or reserved and included in a Memorandum of Easements on the survey plan.

   ~~*b) That Right of Way D shall be duly created or reserved over Lot 53 in favour of Lots 54 and 55, and shall be shown on the survey plan in a Memorandum of Easements. Right of Way D shall have a minimum legal width of 3.5m.*~~

   c) That Right of Way F shall be duly created or reserved over ~~Lot 37~~ Lot 69 in favour of ~~Lot 36~~ Lot 70, and shall be shown on the survey plan in a Memorandum of Easements. Right of Way F shall have a minimum legal width of 3.5m.

   d) That Lot 106 shall be shown on the plan as vesting with Council as road. It shall have a minimum width of 16.0m.

   e) That Lot 108, Lot 110, and Lot 111 shall vest with Council as accessway. ~~Its~~ Their widths shall be determined in consultation with Transportation.

   f) [deleted]

   g) That a right of way in gross shall be created over Lot 105 in favour of the Dunedin City Council, and shall be shown on the survey plan in a

Memorandum of Easements in Gross. The easement in gross shall cover the entire extent of Lot 105.

h) <u>That Right of Way C shall be duly created or reserved over Lot 43 in favour of Lots 40 to 42 and 44 to 47, and shall be shown on the plan in a Memorandum of Easements. It shall have a minimum legal width of 6.0m where serving four or more residences, and a minimum legal width of 3.5m where serving three or fewer residences.</u>

8. *Prior to certification pursuant to section 224(c) of the Resource Management Act 1991, the applicant shall complete the following:*

a) The subdividing owner of the land shall provide a letter to the Council advising who their representative shall be for the design and execution of the engineering works required in association with this subdivision and shall confirm that this representative will be responsible for all aspects of the works covered under NZS4404:2004 "Code of Practice for Urban Land Subdivision" in relation to this development.

Construction Period

b) All construction work on the site shall be designed and conducted to ensure that construction noise does not exceed the noise limits in the following table.

Time of Week	*Time Period*	*Leq (dBA)*	*L max(dBA)*
Weekdays	*0730-1800*	*75*	*90*
	1800-2000	*70*	*85*
	2000-0730	*45*	*75*
Saturdays	*0730-1800*	*75*	*90*
	1800-2000	*45*	*75*
	2000-0730	*45*	*75*
Sundays and public holidays	*0730-1800*	*55*	*85*
	1800-2000	*45*	*75*

Sound levels shall be measured and assessed in accordance with the provisions of NZS 6803: 1999 Acoustics – Construction noise. Please Note: the lower noise limits on Sundays and Public Holidays may mean that no construction work can occur on these days.

Water Supply

c) An "Application for Water Supply – New Service" shall be submitted to the Water and Waste Services Business Unit for approval to establish new water connections to each unserviced residential lot. Details of how each new lot is to be serviced for water shall accompany the application.

d) Upon approval by the Water and Waste Services Business Unit, water service connections shall be installed in accordance with the requirements of Section 6.6.2 of the Dunedin Code of Subdivision and Development 2010.

Stormwater Services

e) The stormwater management for Stage 2 of the subdivision shall be undertaken in accordance with the approved Stormwater Management Plan of condition 5(i) above. If individual on-site stormwater retention is to be installed on each new lot, a consent notice shall be prepared for

registration on the title of Lots ~~32 to 56~~ 40 to 76 for the following on-going condition:

> *'Prior to residential activity being established on this site, a stormwater retention tank, to retain all stormwater run-off from roof and any hard stand area surface, shall be installed. The tank shall have a minimum storage capacity of 3000 litres, or another volume as agreed with the Water and Waste Services Business Unit at the Dunedin City Council. Primary discharge shall be through a restricted aperture located near the invert of the tank, which shall be specifically designed to pass 0.5 litres per second. Secondary discharge shall be by way of a standard 100mm diameter drain installed at the top of the tank which shall provide an escape route for water during extreme rainfall events.'*

Foul Sewer Services

f) That all wastewater infrastructure for Stage 2 shall be installed in accordance with Section 5 of the Dunedin Code of Subdivision and Development 2010, unless specifically authorised by the Network Engineer, Water and Waste Services Business Unit.

Erosion and Sediment Control

g) That all practicable measures shall be used to mitigate erosion and to control and contain sediment-laden stormwater run-off from the site during any stages of site disturbance that may be associated with this subdivision.

Transportation

h) Detailed engineering plans, including cross sections, showing the details of the construction of the new roading within Lot 106 shall be submitted to, and approved by, the Group Manager Transportation, in consultation with the Group Manager Parks, Recreation and Aquatics, prior to construction.

i) Upon completion of construction of the new road, all works shall be tested to demonstrate that they meet the acceptance requirements of the Dunedin Code of Subdivision and Development 2010.

j) Right~~s~~ of Way ~~D and~~ F shall be formed to a minimum width of 3.0m, and be hard surfaced and adequately drained for ~~their~~ its duration; and Right of Way C shall be formed in accordance with the widths specified in Rule 20.5.7(v)(b) of the District Plan, and be hard surfaced and adequately drained for its duration.

k) Lot 108 and Lot 110 shall be formed in accordance with the widths specified in Rule 20.5.7(v)(b) of the District Plan, and be hard surfaced and adequately drained.

l) That detailed design of the landscaping for Lot 109 and an implementation plan shall be submitted to the Council for approval prior to works on Lot 109 commencing. The landscaping shall incorporate the following features:

- *The entire lot, excepting hard surfaced areas, shall be planted in shrubbery or small trees;*
- *There shall be no chain link fencing or any other barrier erected;*
- *There shall be no grass lawn;*
- *Pathways within Lot 109 shall be hard surfaced.*

m) The landscaping of Lot 109 shall be established in accordance with the approved design and implementation plan of condition 8(l) above at the consent holder's expense.

n) A bond of $5000 shall be paid to Council to cover a 12 month maintenance period for the landscaping of Lot 109, commencing from the signing of s224(c) for this stage.

General

o) That a 1.8m high fence shall be constructed along the railway boundary of ~~Lots 53 to 56~~ Lots 13 to 21 and 56 to 58 to prevent pedestrians crossing the railway line. The fence shall also extend along the northeast boundary of ~~Lot 53~~ Lot 56 for at least 50.0m.

p) That a consent notice be prepared for registration on the titles of ~~Lots 53 to 56~~ Lots 56 to 58 for the following on-going condition:

> *'All buildings, balconies and decks on this site shall be set back from the boundary with the railway corridor by a minimum of 10.0m.'*
>
> *'Buildings shall be designed, constructed and maintained to ensure the following internal design noise limits are not exceeded, and shall take into account future use of the Main South Railway Line by the addition of 3dB to existing measured or calculated sound levels.'*

Receiving Environment (New, relocated or altered)	***Criterion***
Residential - Bedrooms	*35 $dB_{LAeq,\ 1\ hour}$*
Residential – Habitable Spaces	*40 $dB_{LAeq,\ 1\ hour}$*
Primary Outdoor Amenity Areas	*60 $dB_{LAeq,\ 1\ hour}$*

> *'Where it is necessary to have windows closed to achieve the acoustic design requirements above, an alternative ventilation system shall be installed to provide thermal comfort. To achieve thermal comfort, the following requirements for a ventilation system are recommended:*

- *A quantity of air shall be provided to achieve the requirements of Clause G4 of the New Zealand Building Code. At the same time as meeting this requirement, the sound of the system shall not exceed 30dB LAeq(30s) when measured 1.0m away from any grille or diffuser.*
- *Either: air conditioning shall be provided; or a high air flow rate setting shall provide at least 15 air changes per hour (ACH) in the principal living space and at least 5 CH in all other habitable spaces.*
- *At the same time as meeting the above requirement in b), the sound of the system shall not exceed 40dB LA31(30s) in the principal living space and 35dB LAeq(e0s) in all other habitable spaces, when measured 1.0m away from any grille or diffuser.*
- *The internal air pressure shall be no more than 10 Pa above ambient air pressure due to the mechanical ventilation.*
- *Where a high air flow rate setting is provided, the system shall be controllable by the occupants to be able to alter the ventilation rate with at least three equal stages up to the high setting.*

'Any new building developed for a noise sensitive activity within these sites shall comply with Class C vibration limits in NS 8176E:2005.'

'These conditions specified in this consent notice do not apply to non-residential, unattached structures (such as garages and sheds) which may be erected within the stated set back area.'

'The property owner shall recognise that the property is located adjacent to the Main South Line. The lawful operation of this railway line may result in the occupier experiencing noise and vibration effects. The owners of the land acknowledge that these effects are typical of living near the Main South Line and will not therefore make complaints to the Dunedin City Council or any other party concerning such effects arising from the lawful operation of the Main South Line.'

q) That a consent notice shall be prepared for registration on the title of Lot 105 for the following on-going conditions:

'That this site shall be owned by the developer of the Owhiro Park subdivision (issued resource consent SUB-2014-91 on 27 February 2015, and taking into account any subsequent variations of consent), or the Council, or shall be held in common ownership with an immediately adjacent property.'

'That the purpose of this lot is for use as legal access to Lot 9 DP 254 (CFR OT14D/242), or more generally speaking, the land to the east of the Owhiro Park residential subdivision. The full extent of this lot may be vested as legal road in the future if needed to serve development to the east, and shall be formed to the normal road standard at that time at the expense of the subdivider or developer. The Council shall decide if Lot 105 is to be vested as legal road at the time of resource consent for any development proposal for Lot 9 DP 254 or part thereof.'

'The owner of Lot 105 shall not require the Dunedin City Council to share in the responsibility or expense of maintaining the land or any infrastructure, including fences, within the lot. The full share of any expenses relating to this lot shall be the responsibility of the land owner.'

'That, until the Council requires Lot 105 to be actively utilised as access to the land to the east, the land of Lot 105 can be used by the landowner for gardening, landscaping, amenity, and/or any other residential land use activity that does not include the establishment of permanent structures on the site. It may also be used for private access to Lot 9 DP 254 for any permitted or consented activity occurring on this neighbouring land.'

r) The subdivider shall provide to Council 'as-built' plans and information detailing all engineering works completed in relation to or in association with this subdivision.

Such "as-built" plans of:

(i) the water reticulation pipes laid within the subdivision shall include the locations of hydrants, valves, pipelines, service connections and manifold box installations and details of the pipeline materials and depth of cover over the pipelines. Written confirmation shall also be given that only approved

materials have been used in the construction of the water reticulation in the subdivision.

(ii) the foul and stormwater system shall show laterals for each lot.

s) That a plan shall be prepared for any lot having a stormwater overland flow path requiring on-going protection and management showing the position of the stormwater overland flow path in relation to the property boundary. The plan shall be attached to the consent notice of condition 8(t) below:

t) That a consent notice shall be prepared for registration on any lot having a constructed stormwater overland flow path passing through its boundaries for the following on-going condition:

> *'This site has a constructed stormwater overland flow path in the location shown on the attached plan. It is the property owner's responsibility to maintain this facility and ensure that this flow path is kept clear of any structures or features which will impede the flow of stormwater through this location.'*

~~Stage 3 ('Stage 4' in Council's system): Subdivision of Lot 97 Stage 2 into Lots 57 to 81, Lot 107 (road to vest), Lots 110 & 111 (pedestrian walkway) and Lot 112 (access leg-in):~~

~~9. *The proposal shall be given effect to generally in accordance with the revised plan prepared by Paterson Pitts Group entitled, 'Owhiro Part Subdivision Layout Plan for Consent Variation – Stage 3 Subdivision Layout,' dated 8 May 2015, and the information submitted as part of SUB-2014-91 received by Council on 27 June 2014, and the further information received at Council on 18 December 2014 and the applicant's written right of reply received at Council on 12 February 2015, and the variation SUB-2014-91/B received at Council on 18 May 2015, except where modified by the following:*~~

~~10. *Prior to certification of the survey plan pursuant to section 223 of the Resource Management Act 1991, the applicant shall ensure the following:*~~

~~*a) If a requirement for any easements for services is incurred during the survey then those easements shall be granted or reserved and included in a Memorandum of Easements on the survey plan.*~~

~~*b) That Right of Way E shall be duly created or reserved over new Lot 65 in favour of Lots 64, 66 and 103 (Stage A), and shall be shown on the plan in a Memorandum of Easements. It shall have a minimum legal width of 6.0m where serving four or more residences, and a minimum legal width of 3.5m where serving three or fewer residences.*~~

~~*c) That Lot 107 shall be shown on the plan as vesting with Council as road. It shall have a minimum legal width of 16.0m.*~~

~~*d) That Lots 110 and 111 shall be shown on the plan as access ways. Their legal widths shall be determined in consultation with Transportation.*~~

~~*e) That Lot 112 shall be shown on the plan as being at least 4.5m wide.*~~

~~*f) That the following amalgamation condition shall be shown on the survey plan:*~~

> ~~*'That Lot 112 hereon shall be transferred to the owners of Lot 1 DP 18209 (CFR OT9A/1245), and that one computer freehold register be issued to include both parcels (See CSN Request 1292834).'*~~

~~11. Prior to certification pursuant to section 224(c) of the Resource Management Act 1991, the applicant shall complete the following:~~

~~a) The subdividing owner of the land shall provide a letter to the Council advising who their representative shall be for the design and execution of the engineering works required in association with this subdivision and shall confirm that this representative will be responsible for all aspects of the works covered under NZS4404:2004 "Code of Practice for Urban Land Subdivision" in relation to this development.~~

~~Construction Period~~

~~b) All construction work on the site shall be designed and conducted to ensure that construction noise does not exceed the noise limits in the following table.~~

~~Time of Week~~	~~Time Period~~	~~Leq (dBA)~~	~~L max(dBA)~~
~~Weekdays~~	~~0730-1800~~	~~75~~	~~90~~
	~~1800-2000~~	~~70~~	~~85~~
	~~2000-0730~~	~~45~~	~~75~~
~~Saturdays~~	~~0730-1800~~	~~75~~	~~90~~
	~~1800-2000~~	~~45~~	~~75~~
	~~2000-0730~~	~~45~~	~~75~~
~~Sundays and public holidays~~	~~0730-1800~~	~~55~~	~~85~~
	~~1800-2000~~	~~45~~	~~75~~

~~Sound levels shall be measured and assessed in accordance with the provisions of NZS 6803: 1999 Acoustics – Construction noise. Please Note: the lower noise limits on Sundays and Public Holidays may mean that no construction work can occur on these days.~~

~~Water Supply~~

~~c) An "Application for Water Supply – New Service" shall be submitted to the Water and Waste Services Business Unit for approval to establish new water connections to each unserviced residential lot. Details of how each new lot is to be serviced for water shall accompany the application.~~

~~d) Upon approval by the Water and Waste Services Business Unit, water service connections shall be installed in accordance with the requirements of Section 6.6.2 of the Dunedin Code of Subdivision and Development 2010.~~

~~e) The stormwater management for Stage 3 of the subdivision shall be undertaken in accordance with the approved Stormwater Management Plan of condition 5(i) above. If individual on-site stormwater retention is to be installed on each new lot, a consent notice shall be prepared for registration on the title of Lots 57 to 81 for the following on-going condition:~~

> ~~'Prior to residential activity being established on this site, a stormwater retention tank, to retain all stormwater run-off from roof and any hard stand area surface, shall be installed. The tank shall have a minimum storage capacity of 3000 litres, or another volume as agreed with the Water and Waste Services Business Unit at the Dunedin City Council. Primary discharge shall be through a restricted aperture located near the invert of the tank, which shall be specifically designed to~~

~~pass 0.5 litres per second. Secondary discharge shall be by way of a standard 100mm diameter drain installed at the top of the tank which shall provide an escape route for water during extreme rainfall events.'~~

~~Foul Sewer Services~~

~~f) That all wastewater infrastructure for Stage 3 shall be installed in accordance with Section 5 of the Dunedin Code of Subdivision and Development 2010, unless specifically authorised by the Network Engineer, Water and Waste Services Business Unit.~~

~~Erosion and Sediment Control~~

~~g) That all practicable measures shall be used to mitigate erosion and to control and contain sediment-laden stormwater run-off from the site during any stages of site disturbance that may be associated with this subdivision.~~

~~Transportation~~

~~h) Detailed engineering plans, including cross sections, showing the details of the construction of the new roading within Lot 107 shall be submitted to, and approved by, the Group Manager Transportation, in consultation with the Group Manager Parks, Recreation and Aquatics, prior to construction.~~

~~i) Upon completion of construction of the new road, all works shall be tested to demonstrate that they meet the acceptance requirements of the Dunedin Code of Subdivision and Development 2010.~~

~~j) Right of Way E shall be formed to a minimum width of 4.5m where serving four or more residential units, and 3.0m where serving three or fewer residential units, and be hard surfaced and adequately drained for its duration.~~

~~k) Lot 110 shall be formed in accordance with the widths specified in Rule 20.5.7(v)(b) of the District Plan, and be hard surfaced and adequately drained.~~

~~General~~

~~l) That a 1.8m high fence shall be constructed along the railway boundary of Lots 57 to 65, and including Lot 111 (i.e. there shall be no gap in fencing along the full length of the railway boundary of the entire subdivision), to prevent pedestrians crossing the railway line. The fence shall also extend along the southwest boundary of Lot 65 up to the right of way to Lot 103.~~

~~m) That a consent notice be prepared for registration on the titles of Lots 57 to 65 for the following on-going condition:~~

~~'All buildings, balconies and decks on this site shall be set back from the boundary with the railway corridor by a minimum of 10.0m.'~~

~~'Buildings shall be designed, constructed and maintained to ensure the following internal design noise limits are not exceeded, and shall take into account future use of the Main South Railway Line by the addition of 3dB to existing measured or calculated sound levels.'~~

~~**Receiving Environment (New, relocated or altered)**~~	~~**Criterion**~~

~~Residential – Bedrooms~~	~~35 dB$_{LAeq, 1 hour}$~~
~~Residential – Habitable Spaces~~	~~40 dB$_{LAeq, 1 hour}$~~
~~Primary Outdoor Amenity Areas~~	~~60 dB$_{LAeq, 1 hour}$~~

~~'Where it is necessary to have windows closed to achieve the acoustic design requirements above, an alternative ventilation system shall be installed to provide thermal comfort. To achieve thermal comfort, the following requirements for a ventilation system are recommended:~~

- ~~A quantity of air shall be provided to achieve the requirements of Clause G4 of the New Zealand Building Code. At the same time as meeting this requirement, the sound of the system shall not exceed 30dB LAeq(30s) when measured 1.0m away from any grille or diffuser.~~
- ~~Either: air conditioning shall be provided; or a high air flow rate setting shall provide at least 15 air changes per hour (ACH) in the principal living space and at least 5 CH in all other habitable spaces.~~
- ~~At the same time as meeting the above requirement in b), the sound of the system shall not exceed 40dB LA31(30s) in the principal living space and 35dB LAeq(e0s) in all other habitable spaces, when measured 1.0m away from any grille or diffuser.~~
- ~~The internal air pressure shall be no more than 10 Pa above ambient air pressure due to the mechanical ventilation.~~
- ~~Where a high air flow rate setting is provided, the system shall be controllable by the occupants to be able to alter the ventilation rate with at least three equal stages up to the high setting.~~

~~'Any new building developed for a noise sensitive activity within these sites shall comply with Class C vibration limits in NS 8176E:2005.'~~

~~'These conditions specified in this consent notice do not apply to non-residential, unattached structures (such as garages and sheds) which may be erected within the stated set back area.'~~

~~'The property owner shall recognise that the property is located adjacent to the Main South Line. The lawful operation of this railway line may result in the occupier experiencing noise and vibration effects. The owners of the land acknowledge that these effects are typical of living near the Main South Line and will not therefore make complaints to the Dunedin City Council or any other party concerning such effects arising from the lawful operation of the Main South Line.'~~

~~n) The subdivider shall provide to Council 'as-built' plans and information detailing all engineering works completed in relation to or in association with this subdivision.~~

~~Such "as-built" plans of:~~

~~(i) the water reticulation pipes laid within the subdivision shall include the locations of hydrants, valves, pipelines, service connections and manifold box installations and details of the pipeline materials and depth of cover over the pipelines. Written confirmation shall also be given that only approved materials have been used in the construction of the water reticulation in the subdivision.~~

~~(ii) the foul and stormwater system shall show laterals for each lot.~~

Land Use LUC-2014-323 (as varied by LUC-2014-323/A)

That pursuant to section 34A(1) and 104C and after having regard to section 104 of the Resource Management Act 1991, the Dunedin City Council ***grants*** *consent to a* ***restricted discretionary*** *activity being the creation of ~~a~~ new lots with no access or frontage to legal road at Lots 99, 103 and 104 SUB-2014-91/B, at 67 and 67A Gladstone Road North, Mosgiel, subject to conditions imposed under section 108 of the Act as follows:*

a) The proposal shall be given effect to generally in accordance with the revised plan prepared by Paterson Pitts Group entitled, 'Owhiro Park Subdivision Layout Plan Overall Subdivision Layout,' and the information submitted as part of LUC-2014-323 received by Council on 17 June 2014, and the information submitted as part of the variation LUC-2014-323/A received by Council on 18 May 2015, except where modified by the following:

b) That a covenant holding Lot 104 with an adjoining title having physical and legal access shall be entered into between the developer and the Council prior to the completion of Stage 1 of SUB-2014-91/B.

c) That compliant legal vehicle access shall be provided for Lot 103 to Lot 107 at the time of Stage 3 SUB-2014-91/B.

d) Lot 99 shall not be used for residential purposes until such time as either legal and practical access is established to this lot, or Lot 99 is held with an adjoining property having legal and practical access, and until such time as Lot 99 is provided with adequate water supply and drainage.

Advice Notes

1. In addition to the conditions of a resource consent, the Resource Management Act establishes through sections 16 and 17 a duty for all persons to avoid unreasonable noise, and to avoid, remedy or mitigate any adverse effect created from an activity they undertake. A similar responsibility exists under the Health Act 1956.

2. The lapse period specified above may be extended on application to the Council pursuant to section 125 of the Resource Management Act 1991.

3. It is the consent holder's responsibility to comply with any conditions imposed on their resource consent prior to and during (as applicable) exercising the resource consent. Failure to comply with the conditions may result in prosecution, the penalties for which are outlined in section 339 of the Resource Management Act 1991.

4. This is resource consent. Please contact the Building Control Office, Development Services, about the need for building consent for any construction work as part of the subdivision.

5. The Water and Waste Services Business Unit require that the installation and connection of new water reticulation to the existing public water system shall be carried out after the consent holder has completed and submitted an 'Application for Water Supply' form to the Council and following the consent holder's acceptance of the quote for the required work (as per the Dunedin City Council's Terms and Conditions for the Supply of Water and the Dunedin City Council Code of Subdivision (Part 4)). A quote for the required work must be obtained from an approved water supply connection installer (AWSCI). The list of AWSCI's, application form and the full process can be found here http://www.dunedin.govt.nz/services/water-supply/new-water-connections.

6. The consent holder is to ensure that all practicable measures are used to mitigate erosion and to control and contain sediment-laden stormwater run-off from the site during any stages of site disturbance that may be associated with this subdivision.

7. The following documentation is recommended as best practice guidelines for managing erosion and sediment –laden run-off and for the design and construction of erosion and sediment control measures for small sites:

   - ARC Technical Publication No. 90 Erosion and Sediment Control Guidelines for Land Disturbing Activities in the Auckland Region, March 1999.
   - Environment Canterbury, 2007 'Erosion and Sediment Control Guidelines for the Canterbury Region" Report No. CRCR06/23.
   - Environment Canterbury, 2007 "Erosion and Sediment Control Guidelines for Small Sites."

8. All aspects relating to the availability of the water for fire-fighting should be in accordance with SNZ PAS 4509:2008, being the Fire Service Code of Practice for Fire Fighting Water Supplies, unless otherwise approved by the New Zealand Fire Service. Any new development must be within 135m of a fire hydrant, otherwise the proposal will be non-compliant with fire-fighting requirements.

9. Parts 4, 5 and 6 (Stormwater Drainage, Wastewater and Water Supply) of the Dunedin Code of Subdivision and Development 2010 must be complied with.

10. It is advised that any drainage issues and requirements (including the necessary works) will be addressed via the building consent process.

11. Certain requirements for building on this land may be stipulated via the building consent process, and are likely to include the following points:
    - For sites level with or above the road, the finished floor level of any building is to be a minimum of 150mm above the crown of the road.
    - For sites below the road, the finished floor level is to be no less than 150mm above the lowest point on the site boundary. Surface water is not to create a nuisance on any adjoining properties.
    - For secondary flow paths, the finished floor level shall be set at the height of the secondary flow plus an allowance for free board.
    - As required by the New Zealand Building Code E1.3.2, surface water resulting from an event having a 2% probability of occurring annually, shall not enter buildings. The finished floor level shall be set accordingly.

12. This consent does not address any earthworks for this subdivision associated with the development of the new roads, access lots, new lots, or the formation of any new access, manoeuvring areas, or retaining walls. Should earthworks on-site breach the performance standards of Section 17 of the District Plan, further consent will be required. Land use consent may also be required for any structures, such as retaining walls supporting fill or surcharge, near to boundaries.

13. Parking and on-site manoeuvring will be assessed for development on each new lot at the time of building consent or resource consent application.

14. It is recommended that a formal agreement be drawn up between the owners and users of the access lots to clarify the responsibilities for the maintenance of the access lots.

15. It is advised that the vehicle access from the carriageway to the property boundary is over road reserve and is therefore required to be constructed in accordance with the Dunedin City Council Vehicle Entrance Specification (available from Transportation Operations).

16. It is recommended that, if the property owners of 110 and/or 114 Hagart-Alexander Drive have concerns about possible damage to their properties during the construction phase of the subdivision works, they take the opportunity to meet with the developer on their sites prior to construction works commencing with a view to recording the present state of the properties. The developer should also be able to initiate an inspection of their properties prior to works commencing. Council is prepared to hold these records, but will not be involved in any subsequent agreement or dispute that may result between the parties.

17. It is advised that the Council does not share responsibility for the maintenance of fences on front boundaries or reserve land. The developer has offered to pay 50% of the maintenance costs of the new fencing for 110 and 114 Hagart-Alexander Drive during the period of subdivision works only (i.e. up to the signing of the s224(c) certificate of Stage 3 of SUB-2014-91/B or any subsequent variation of this consent). This offer does not extend to the period of development of the new lots. The Council will not be involved in administering this work or in any dispute that may result between the parties.

~~Issued at Dunedin this 27 February 2015.~~
~~Re-issued at Dunedin pursuant to section 127 this 16 June 2015.~~
~~Re-issued at Dunedin pursuant to section 127 this 27 November 2015.~~
Re-issued at Dunedin pursuant to section 127 this 9 March 2017.

Lianne Darby
Planner

COPY OF PLAN: Not to Scale

NOTES:

ALLOTMENT PURPOSES:

Lots 1-76 are for normal residential sites.

Lots 100, 101 & 105 are for Legal Road (public).

Lots 102 & 106-111 are for Reserve (public).

Lot 103 is a large residual residential site (to be retained by the existing landowner).

Lot 104 is a large residential site to be transferred to an adjoining owner (Brooklands Village).

Lot 105 is to be transferred to an adjoining landowner (Lot 8 DP 254) and shall be subject to a right-of-way in gross in favour of Dunedin City Council.

Lot 112 is a leg-in access corridor to be transferred to an adjoining owner (#69 Gladstone Road North).

EASEMENT AND RESTRICTION PURPOSES:

Easements 'B1' and 'B2' are existing access and service easements over new Lots 103 and 104 respectively. These are dominant to #69 Gladstone Road North.

Easement 'C' is a new access and service easement over new Lot 43. This is dominant to Lots 40-42 and 44-47.

Easement 'E' is a new access and service easement over new Lot 13. This is dominant to Lots 12 & 103.

Easement 'F' is a new access and service easement over new Lot 69. This is dominant to Lot 70.

Easement 'G' is a service easement over the adjoining DCC Reserve land. This is dominant in gross to DCC.

Easements 'H'-'Y' are service easements over the various new sites for drainage and services (but not right-of-way).

Easement 'Z' is a new access easement over the whole of new Lot 105. This is dominant in gross to DCC.

Areas marked with the reference 'SW' are to be subject to a requirement for the maintenance of stormwater overland flow paths.

GENERAL NOTES:

ALL BOUNDARIES, DIMENSIONS AND AREAS ARE SUBJECT TO FINAL SURVEY.

ADDITIONAL EASEMENTS, COVENANTS, CONSENT NOTICES, AND OTHER RESTRICTIONS MAY BE INCLUDED OVER THE NEW SITES AS NECESSARY TO SUPPORT THE SUBDIVISION.

LOTS 1-76, 100-105 AND 106-112 BEING A PROPOSED SUBDIVISION OF LOT 1 DP 16047, LOT 20 DP 17969 AND PT SEC 4 BLOCK I EAST TAIERI SURVEY DISTRICT

SUBDIVISION LAYOUT

PATERSONPITTSGROUP
Surveying • Planning • Engineering

MINARET RESOURCES LIMITED
OWHIRO RIVER LIMITED
HAGART-ALEXANDER DRIVE

OWHIRO PARK
SUBDIVISION LAYOUT PLAN
FOR CONSENT VARIATION

A3 | 1:2,000 | DWHRO - 01 | 1 of 1 | F | 23/02/2017

30 September 2015

Owhiro River Limited
C/O Paterson Pitts Group
Attn: Andrew Robinson
PO Box 5933
Dunedin 9058

Dear Andrew,

RESOURCE CONSENT APPLICATION: LUC-2015-389
67 & 67A GLADESTONE ROAD NORTH
MOSGIEL

Your application for land use consent to undertake earthworks at the above site was processed on a non-notified basis in accordance with Sections 95A to 95G of the Resource Management Act 1991. In considering Sections 95A to 95G, it was determined that any adverse effects would be no more than minor, there were no potentially affected parties to the application and that there were no special circumstances in relation to the proposal. Therefore, public notification of the application was not required. The application was considered by a Senior Planner – Consents, under delegated authority, on 30 September 2015.

Please note that the processing of this application could not be completed within the 20 working day time limit prescribed under section 115 of the Resource Management Act 1991. The time limits for the processing of this consent have been extended pursuant to section 37A(4)(b)(ii) of the Resource Management Act 1991 on 28 September 2015 by Senior Planner – Consents, under delegated authority.

I advise that the Council has **granted** consent to the application. The decision is outlined below, and the decision certificate is attached to this letter.

DESCRIPTION OF ACTIVITY
Resource consent is sought for earthworks at 67 and 67A Gladstone Road North. The proposed earthworks follow a subdivision which was granted in February (SUB-2014-91 & LUC-2014-323) which is to create 81 buildable residential lots. The proposed earthworks are necessary in order for the subdivision to be given effect and completed.

The site consists mainly of undeveloped pasture; the existing structures and adjacent land will be separated from the development block as part of the subdivision and no bulk earthworks are anticipated for the area around the existing buildings.

The subject site is bordered by the Owhiro Stream, Brooklands Retirement Village and the South Island Main Trunk Railway. The new development will be accessed via a new legal road that will branch out from Hagart-Alexander Drive, with part of the new road being located on the site now occupied by a house at No 112.

A volume of 36,939m^3 of cut to fill earthworks is anticipated, 2000m^3 of fill to be brought on site and 4,955m^3 will be removed from the site. The application states that all earthworks will be certified by a qualified geotechnical engineer.

A culvert is also required. The concrete structure is, according to the applicant, "relatively benign". Plans for the structure are included with the application. A resource consent to the ORC has been made in relation to this culvert.

Further information received by email from the applicant's agent on the 29 September confirmed that the no earthworks will extend beyond the boundary of the subject sites. This confirmation was in response to Sheet 3 of 5 of the plans showing shading onto Lot 1 DP 18209. The applicant's agent clarified that the shading evident on Lot 1 DP 18209 was incorrect and no earthworks will extend past the boundary.

The site is legally described as

- 67 Gladstone Road North, legally described as Part Section 4 Block II East Taieri Survey District (CFR OT258/263 Ltd – Part Cancelled). The title shows the area to be 20.3582ha, but the part-cancellation of this title removed 15.7170ha from the site in 1974 leaving an area of 4.6412ha. Council's cadastral layer of GIS shows it to have an area of 4.733ha;
- 67A Gladstone Road North, legally described as Lot 1 Deposited Plan 18347 (CFR OT9C/1038), with an area of 2.8443ha;
- 112 Hagart-Alexander Drive, legally described as Lot 23 Deposited Plan 17999 (CFR OT13B/881), with an area of 696m2;
- Esplanade Reserve, legally described as Lot 2 Deposited Plan 18347 (CFR OT18A/955), having an area of 9279m2; and
- Lot 6 Balmoral Avenue, legally described as Lot 5-6 DP 21347 (CFR 97094 and OT17A/806).

REASONS FOR APPLICATION

Dunedin City District Plan

The subject site is zoned **Residential 1** in the Dunedin City District Plan. The esplanade reserve lot is part of the urban landscape conservation area **ULCA08 – Owhiro Stream, Mosgiel**. The railway line is designated D419 – Main South Railway. The general area is shown on the Hazards Register as **10100 – Flood (urban stormwater)**, **10106 – Land Stability (land movement)**, **10111 – Seismic (intensified shaking)** and **11407 – Seismic (liquefaction)**.

Landscape

Rule 13.8.1 lists the erection of any structure more than 20m^2 in area or 5m in height in an urban landscape conservation area as being a controlled activity. The culvert will have an area greater than 20m^2, and will therefore be a **Controlled Activity** as it is located in an urban landscape conservation area.

Earthworks

The earthworks are greater than the permitted and controlled threshold, therefore are considered a **Restricted Discretionary Activity** pursuant to 17.7.5(ii). The Councils discretion under this rule is restricted to:

a) Adverse effects on the amenity if neighbouring properties
b) Effects on visual amenity and landscape
c) Effects on any archaeological site and/or any cultural sites
d) Effects on the transportation network, cause by the transport of excavated material or fill
e) Effects from the release of sediment beyond site boundaries, including transport of sediment by storm water systems.
f) Cumulative effects relating to any of those matters.
g) Design and engineering of retaining structures and earthworks.
h) Effects on the stability of land and buildings.
i) Effects on the surface flow of water and on flood risk.

j) Effects on underground utilities.

NES Soil Contamination Considerations:
The Resource Management (National Environmental Standard for Assessing and Managing Contaminants in Soil to Protect Human Health) Regulations 2011 came into effect on 1 January 2012. The National Environmental Standard applies to any piece of land on which an activity or industry described in the current edition of the Hazardous Activities and Industries List (HAIL) is being undertaken, has been undertaken or is more likely than not to have been undertaken. Activities on HAIL sites may need to comply with permitted activity conditions specified in the National Environmental Standard and/or might require resource consent.

SUB-2014-91 refers to the HAIL activity:

> *"The applicant's agent has undertaken a search of the Otago Regional Council and Dunedin City Council records. The Otago Regional Council did not identify land use or site contamination information associated with the development of the site. The Dunedin City Council records show two potential HAIL activities on the 2009 aerial photograph. These are possible fill material in the southwest corner of the site (HAIL G5), and possible horticultural use (HAIL A10). The fill material has been observed on-site to be a vegetable garden. The owner of the site has commented on the horticultural use stating, 'No problem with agricultural chemicals; I use very little. They are used at recommended doses and stored in safe areas from the land [Minaret] is purchasing.'*
>
> *The applicant's agent advises in a letter dated 22 July 2014 submits that, based on the above statement, the land has not been used for '… persistent pesticide bulk storage or use including … market gardens, orchards, glass houses …' (A10). The applicant's agent concludes that there is no evidence of activities or industries on the site that would potentially have lead to contamination of the property, and feel that unless further information or evidence is discovered, there should be no impediment to the proposed development from a site contamination perspective."*

No further evidence has been provided to Council to date, to indicate differently from the above comments; consequently, it is considered that the above comments are still relevant. In summary, the subject site is not considered to be a HAIL site and the NES does not apply to this proposal.

Proposed Second Generation Dunedin City District Plan ("Proposed 2GP")
The Proposed 2GP was notified on 26 September 2015. Section 88A of the Resource Management Act determines that the activity status of the application (discussed above) remains unaltered.

PLANNING ASSESSMENT

Affected Persons

No affected persons forms were submitted with the application. No person or party is considered to be adversely affected by the activity. The prior subdivision was processed on a limited notified basis. In respect of the current application affected parties and the submitters for the subdivision were not considered to be affected parties for the reasons outlined under the heading titled 'Effects on the Environment'.

Effects on the Environment

The following assessment of effects on the environment has been carried out in accordance with Section 104(1) of the Resource Management Act 1991. It addresses those assessment matters listed in Rules 17.8 and 14.7 of the Dunedin City District Plan considered relevant to the proposed activity, and is carried out on the basis that the environment is characterised residential dwellings situated to the north, a retirement village and two existing residential dwelling to the west and undeveloped farmland to the eat. The railway line passes along the southern margin of the site.

Any actual or potential effects on the environment of allowing this proposal to proceed will be no more than minor for the following reasons:

<u>Dunedin City District Plan</u>

1 Effects on Stability and Sedimentation Effects and Effects on the surface flow of water and on flood risk (Assessment Matter 17.8.1 and 17.8.6)

The application has been assessed by the Council's Consultant Engineer who considers ….

We have assessed the application in relation to the hazard register, street files and available aerial photography. We have not visited the site.
We have the following comments to make regarding the application.

Proposal
The proposed activity is to undertake earthworks on the site to complete the subdivision development. Site investigation reports have been provided from Geosolve, ref 140576, assessing the potential of liquefaction under serviceable and ultimate seismic events.
Plans for the proposal are provided within the application

Hazards
The site is recorded on the GNS Assessment of Liquefaction hazards in Dunedin City, dated May 2014, as within: Domain B. The ground is predominantly underlain by poorly consolidated river or stream sediments with a shallow groundwater table. There is considered to be a low to moderate likelihood of liquefaction-susceptible materials being present in some parts of the areas classified as Domain B;

Global Setting
The site is on flat alluvial plains pasture.

Earthworks / Excavations / Retaining Structures
The proposed earth moving includes significant cut and fill, with 30,000 cu m of topsoil movement, and 40-50,000 cu m of cut and fill operation

Previous Communications
Previous advice on this subdivision stated:
· The application proposes a significant interruption of overland storm water flow paths; and a high density of proposed subdivision; which does not allow for a significant alternative over-land flow path. The layout as indicated has a significant potential to displace this risk onto other parts of this, or others' property. The space required to be gazetted for overland flow paths should be confirmed prior to approving this density of subdivision.
· The liquefaction / lateral spread risk is significant, and the entire property is within 300m of the Owhiro stream, as well as several other storm drains. This risk would be much more efficiently quantified whilst under sole ownership. Should the seismic risk assessment indicate a high risk of liquefaction and/or lateral spread, then remedial ground improvement works would also only be an option whilst the property is under sole title.

Discussion
Liquefaction
Geosolve has undertaken a site-specific geotechnical assessment of the liquefaction hazard including dynamic cone testing to 15m depth to quantify the potential for liquefaction for each dwelling.

The Geosolve report concludes:

·Some liquefaction is predicted under Ultimate Load State loading that may cause local disruption to the surface of the site, which could reach damaging levels in the lower part of the site.
· The current earth works proposed in the low-lying areas will provide a non-liquefiable crust that will likely mitigate the effects of liquefaction on structures
· There is no reason to refuse the subdivision consent of this site based on the liquefaction hazard provided the assessment in this report is taken into account in the subdivision and dwelling design at the site.
· Additional geotechnical investigations are recommended to better define the areas of soft ground in the lower parts of the site. Lots -specific investigations are also recommended at the building consent stage to assess shallow bearing capacity.

Flooding / Overland Flow
We understand that the Otago Regional Council is being consulted on appropriate management of the stream into culverts.
We understand that there was no significant ponding on the site in the June 2015 rainfall event, and that alternative flow paths are to be maintained in the event of overtopping / blockage of the proposed culverts.

Provided these two risks are appropriately engineered out, the proposal will not create or exacerbate instabilities on this or adjacent properties

Advice
We see no reason to refuse the subdivision consent of this site based on the liquefaction hazard provided the assessment report in the application is taken into account in the subdivision and dwelling design at the site.

Based on the assessment above and assuming compliance with the conditions of consent, I consider that the earthworks will have a no more than minor effect on site stability nor will result in sedimentation beyond the property boundary. In addition, I consider that the effect of the earthworks on the watercourse will be no more than minor.

2 Effects on Water and Waste Infrastructure 17.8.8.

The application was referred to the Consents and Compliance Officer of Water and Waste Services for comment, she has provided the following comments and recommendations:

A review of the Council's GIS records shows 450 mm diameter distribution main and 100 mm diameter water reticulation main in Hagart-Alexander Drive, along with a 225 mm diameter foul sewer. There is a 200 mm diameter water distribution main and a 100 mm diameter water reticulation main in Gladstone Road North. There are two 150 mm diameter wastewater pipes in Gladstone Road North – one is a gravity main and the other is a trunk main. A river runs along the boundary of 67A Gladstone Road North, this is under ORC jurisdiction.

<u>Stormwater and Erosion Control During Development</u>
The Consent Holder is to ensure that all practicable measures are used to mitigate erosion and to control and contain sediment-laden stormwater run-off from the site during any stages of site disturbance.

As there is an open watercourse running behind the property, Otago Regional Council permitted rules apply. It is advised that the consent applicant consider rule 2.1.2 - Sediment discharge to waterways of the Otago Water Plan Change 6A:

"Sediment discharges should not result in a conspicuous change to colour or visual clarity, nor noticeable local sedimentation, in the receiving water. That means you should not be able to see a dirty plume in the river at any time.

Work that exposes soil, such as tree harvesting, site development earthworks, ploughing, or using sacrificial or fallow paddocks, can result in sediment loss to

waterways. Discharge from such activities is prohibited where no measures have been taken to control sediment."

Please contact the Otago Regional Council with any questions or concerns associated with rules for construction works close to waterways.

The above advice is accepted and conditions and advice notes have been formulated to reflect the above advice. Subject to compliance with conditions of consent and advice notes followed, it is considered that the proposal will have less than minor effects on the

3 Effects on Neighbours (Assessment Matter 17.8.2)

The proposed earthworks are associated with residential activity and are, therefore, anticipated within this zone. The scale of the earthworks is commensurate with the scale of the approved subdivision. The earthworks will be contained within the subject site. Apart from the property at 69 Gladstone Road North the earthworks are separated by the Owhiro Stream Channel from neighbouring residential activity. The earthworks will result in overall in a levelling of the slope of the site with fill used to build up low lying ground within the site. The proposal will not be elevating ground levels in proximity to neighbouring properties. Proposed storm-water management works required for the site development are expected to reduce the effect of the development on the neighbours rather than increasing the impact. Potential effects on the neighbours will be managed through conditions of consent. Effects that may arise as a result of the earthworks are considered to be temporary and will be controlled through conditions.

It is expected that there will be noise effects associated with the construction of any development. In regard to the proposed construction activity, this shall be limited to the times set out below and shall comply with the following noise limits as per New Zealand Standard NZS 6803:1999:

Time of Week	Time Period	Leq (dBA)	L max(dBA)
Weekdays	0730-1800	75	90
	1800-2000	70	85
	2000-0630	45	75
Saturdays	0730-1800	75	90
	1800-2000	45	75
	2000-0630	45	75
Sundays and public Holidays	0730-1800	55	85
	1800-2000	45	75
	2000-0630	45	75

The discharge of dust is not permitted to cause a nuisance and falls under the jurisdiction of the Otago Regional Council. An advice note has been attached to this consent instructing the developer to dampen any loose soil to prevent dust escaping from the property boundary. In regard to vibration, the applicant is advised to inform his neighbours of the timing and scale of the proposed works, prior to any works being undertaken.

Overall, I consider that the development of the site is associated with residential activity and is to be expected within this zone. Provided conditions of consent are adhered to and advice notes followed, I consider that the effects on the neighbours will be no more than minor. In addition, it is my opinion that the design and appearance of the activity will not affect the general scale or character of the area and will not have an adverse effect on the neighbourhood.

4 Effects on Visual Amenity and Landscape (Assessment Matter 17.8.3, 14.7.3 and 14.7.4)

The proposal was forwarded to the Landscape Designer for comment, who has provided the following notes:

In terms of landscape values for the earthworks associated with this subdivision activity, I consider maintaining the integrity and visual amenity of Owhiro Stream is very important (as is its water quality, even although this is primarily an Otago Regional Council matter).

The application has detailed design for a box culvert for Owhiro Stream, which from my somewhat limited knowledge of such structures appears to provide a suitable crossing for the stream. I assume the application, if recommended for approval, will have a condition which will require this structure to be "substantially in accordance with" the designs submitted, or whatever is the current wording for such a condition.

With regard to erosion and sediment control, the application addresses this matter in some detail, providing a Sediment Control Plan and some important details in a section called "Sequence of Construction", with important pointers on how the work will ensure that a minimum of runoff damage should occur.

I appreciate that if the consent is approved there will be a number of conditions. From the landscape effects perspective, I consider that re-establishing vegetation as soon as possible after the earthworks is very important. The following (or similar) condition is recommended:

"Topsoil is to replaced on newly positioned fill and sown in grass as soon as practicable, and in no more than two days following completion of fill placement."

I accept the above advice and have formulated conditions of consent to reflect the Landscape Designers recommendations. Provided the above consent conditions are complied with, the proposal anticipated to create no more than minor adverse effects on the subject landscape management area.

5 Effects on Archaeological and Cultural Sites (Assessment Matter 17.8.4)

There is no indication that the site has any archaeological and cultural significance. That said it is considered prudent to attach an accidental discovery advice note to the consent to ensure that should an item of interest be uncovered during the works, proper protocol will be followed.

6 Effects on the Transportation Network (Assessment Matter 17.8.5)

The proposed earthworks are to be contained within the site. While there will be a number of truck movements associated with the earthworks, these are to be expected with any building project and given the scale and duration of the earthworks, it is unlikely to have a more than minor effect on the transportation network, however conditions of consent have been applied to the decision certificate to ensure mitigation measures are in place in respect to the earthworks.

Proposed 2GP

In this instance, there are no applicable assessment rules.

CONSENT DECISION

That, having taken into account:

- *the interests of any person who may be adversely affected by the time extension;*
- *the interests of the community in achieving an adequate assessment of effects of a proposal , policy statement or plan, and*
- *its duty under Section 21 to avoid reasonable delay*

the Council has, pursuant to section 37A(4)(b)(ii) of the Resource Management Act 1991, extended the requirement outlined in section 115 regarding the time in which notification of a decision must be given after the date the application was first lodged with the Council.

That, pursuant to Sections 34A(1), 104 and 104C of the Resource Management Act 1991 and the provisions of the Dunedin City District Plan, the Dunedin City Council ***grants*** *consent to a* ***discretionary (restricted)*** *activity to undertake earthworks and establish a culvert within a Landscape Conservation Area on the site at 67 and 67A Gladstone Road North and Lot 6 Balmoral Avenue, Mosgiel, legally described as Part Section 4 Block II East Taieri Survey District, Lot 1 Deposited Plan 18347, Lot 23 Deposited Plan 17999, Lot 2 Deposited Plan 18347, LOT 5-6 DP 2134 (Computer Freehold Register OT258/263, OT9C/1038, OT13B/881, OT18A/955, 97094 and OT 17A/806) subject to the conditions imposed under Section 108 of the Act, as shown on the attached certificate.*

REASONS

Effects

In accordance with Section 104(1)(a) of the Resource Management Act 1991, the actual and potential adverse effects associated with the proposed activities have been assessed and outlined above. It is considered that the proposal will have no more than minor adverse effects on the environment.

District Plan – Objectives and Policies

In accordance with Section 104(1)(b) of the Resource Management Act 1991, the objectives and policies of the Dunedin City District Plan were taken into account when assessing the application. The proposal is considered to be consistent with the following objectives and policies:

- **Objective 4.2.1 and Policy 4.3.1 (Sustainability Section)** that seek to enhance and maintain the amenity values of the Dunedin area.
- **Objective 8.2.1 and Policy 8.3.1 (Residential Section)** that seek to ensure the adverse effects on the amenity values and character of residential areas are avoided remedied or mitigated.
- **Objective 17.2.3 and Policy 17.3.9 (Earthworks Section)** that seek to control the location and scale of earthworks and to ensure that earthworks are undertaken in a manner that is safe and in a manner that minimises adverse effects on the environment.

<u>Proposed 2GP</u>

The objectives and policies of the 2GP must be considered alongside the objectives and policies of the current district plan. The proposal is considered to be consistent with the following 2GP objectives and policies:

- **Objective 15.2.2 and Policy 15.2.2.1 (Residential Zones),** which seek to ensure that residential activities, development, and subdivision activities provide high quality on-site amenity for residents
- **Objective 15.2.3 and Policy 15.2.3.1 (Residential Zones),** which seek to ensure that activities in residential zones maintain a good level of amenity on surrounding residential properties and public spaces.
- **Objective 15.2.5 and Policy 15.2.5.1 (Earthworks)** which seek to ensure earthworks are enabled and appropriately designed while avoiding or mitigating any adverse effects on visual amenity, stability or land, buildings and structures and neighbours.

The proposal is also considered to be consistent with the anticipated environmental results of Section 17.9 and Sections 14.7, for the reasons outlined under the heading 'Effects on the Environment' above.

RIGHTS OF OBJECTION

In accordance with Section 357A of the Resource Management Act 1991, the consent holder may object to this decision or any condition within 15 working days of the decision being received, by applying in writing to the Dunedin City Council at the following address:

The Chief Executive
Dunedin City Council
PO Box 5045
Moray Place
Dunedin 9058

Attention: Senior Planner - Enquiries 1st Floor

Monitoring

Section 35(2)(d) of the RMA requires every council to monitor resource consents that have effect in its region or district. The scale and nature of the activity, the complexity and number of the conditions needed to address the environmental effects and whether the conditions have been complied with determines the number of monitoring inspections required. Given the nature of your intended works, this consent will require at least one inspection.

The City Planning Department sets out the fixed fees charged for monitoring in its schedule of fees. The fee for your scheduled inspection will be included in the invoice for your application.

It should be noted that if additional inspections are required, beyond those scheduled at the time the consent is issued, then there is the ability to apply additional charges to cover the costs of these extra inspections. Often you can reduce the need for additional inspections by complying with the conditions of consent in a timely manner and by ensuring on-going compliance with those conditions. Please ensure that you read the conditions of your consent carefully to establish your obligations when exercising your consents.

Yours faithfully

Sophie Lord
Planner

Consent Type: Land Use Consent

Consent Number: LUC-2015-389

Pursuant to Sections 34A(1), 104 and 104C of the Resource Management Act 1991 and the provisions of the Dunedin City District Plan, the Dunedin City Council **grants** consent to a **discretionary (restricted)** activity to undertake earthworks and establish a culvert within a Landscape Conservation Area, subject to the conditions imposed under Section 108 of the Act.

Location of Activity: 67 and 67A Gladstone Road North and Lot 6 Balmoral Avenue, Mosgiel

Legal Description: Part Section 4 Block II East Taieri Survey District, Lot 1 Deposited Plan 18347, Lot 23 Deposited Plan 17999, Lot 2 Deposited Plan 18347, LOT 5-6 DP 2134 (Computer Freehold Register OT258/263, OT9C/1038, OT13B/881, OT18A/955, 97094 and OT 17A/806)

Lapse Date: 30 September 2020, unless the consent has been given effect to before this date.

Conditions:

1 *The proposed activity shall be undertaken in general accordance with the plans and supporting information provided with the resource consent application, received by the Council on 31 August 2015 and further information received 29 September 2015, except where modified by the following conditions of consent.*

2 *The applicant shall take all practicable steps to ensure that loose material (e.g. mud, debris) does not migrate from the site onto Hagart-Alexander Drive.*

3 *The Consent Holder is to ensure that all practicable measures are used to mitigate erosion and to control and contain sediment-laden stormwater run-off from the site during any stages of site disturbance.*

4 *Topsoil is to replaced on newly positioned fill and sown in grass as soon as practicable, and in no more than two days following completion of fill placement."*

5 *The consent holder shall provide notice to the Resource Consent Monitoring team by email to rcmonitoring@dcc.govt.nz of the start date of the works. This notice shall be provided at least five (5) working days before the works are to commence.*

6 *Any earth fill supporting foundations shall be specified and supervised by a suitably qualified person in accordance with NZS 4431-1989 Code of Practice for Earthfill for Residential Development. If cut material is used on site for fill purposes then moisture controls may be required to meet this standard.*

7 *If fill is to be reused on the site it is to be deposited in accordance with best practice and keyed into any slopes. Any batter slopes constructed on the site shall comply with the setback requirements of Section 17.7 of the District Plan or a further land use consent will be required.*

8 *Any change in ground levels is not to cause a ponding or drainage nuisance to neighbouring properties.*

9 *Cartage of surplus excavated soil from the site should be to an approved clean fill site being a site where dumping of fill is permitted or authorised by a resource consent. The Contractor shall be advised accordingly.*

10 *Should the consent holder cease, abandon, or stop work on site for a period longer than 6 weeks, the consent holder shall first take adequate preventative and remedial measures to*

control sediment discharge/run-off and dust emissions, and shall thereafter maintain these measures for so long as necessary to prevent sediment discharge or dust emission from the site. All such measures shall be of a type and to a standard which are to the satisfaction of the Resource Consent Manager.

11 If at the completion of the earthworks operations, any public road, footpath, landscaped areas or service structures that have been affected/damaged by vehicles and machineries used in relation to earthworks and construction works, the consent holder shall ensure the damaged feature is reinstated to the satisfaction of Council at the expense of the consent holder.

Advice Notes:

1 In addition to the conditions of a resource consent, the Resource Management Act 1991 establishes through Sections 16 and 17 a duty for all persons to avoid unreasonable noise, and to avoid, remedy or mitigate any adverse effect created from an activity they undertake.

2 Resource consents are not personal property. This consent attaches to the land to which it relates, and consequently the ability to exercise this consent is not restricted to the party who applied and/or paid for the consent application.

3 The lapse period specified above may be extended on application to the Council pursuant to Section 125 of the Resource Management Act 1991.

4 It is the responsibility of any party exercising this consent to comply with any conditions imposed on the resource consent prior to and during (as applicable) exercising the resource consent. Failure to comply with the conditions may result in prosecution, the penalties for which are outlined in Section 339 of the Resource Management Act 1991.

5 Specific engineering design of foundations may be required, and this must be undertaken by a suitably qualified specialist.

6 Lot-specific investigations are also recommended at the building consent stage to assess shallow bearing capacity.

7 Additional geotechnical investigations are recommended by the applicant's geotechnical specialist to better define the areas of soft ground in the lower parts of the site.

8 It is recommended that a Traffic Management Plan be produced by the consent-holder in respect to the vehicle movements during construction. Council's Transportation Operations department can support the applicant in developing this

9 This is a resource consent. Please contact the Council's Building Control Office, Development Services, about the building consent requirements for the work.

10 Parts 4, 5 and 6 (Stormwater Drainage, Wastewater and Water Supply) of the Dunedin Code of Subdivision and Development 2010 must be complied with.

11 The Consent Holder is to ensure that all practicable measures are used to mitigate erosion and to control and contain sediment-laden stormwater run-off from the site during any stages of site disturbance that may be associated with this subdivision.

12 The following documentation is recommended as best practice guidelines for managing erosion and sediment-laden run-off and for the design and construction of erosion and sediment control measures for small sites:
- ARC Technical Publication No. 90 Erosion and Sediment Control Guidelines for Land Disturbing Activities in the Auckland Region, March 1999.
- Environment Canterbury, 2007 "Erosion and Sediment Control Guidelines for the Canterbury Region" Report No. CRCR06/23.
- Environment Canterbury, 2007 "Erosion and Sediment Control Guidelines for Small Sites"

13 Unless otherwise specified all conditions should be complied with within 12 months of the consent having been given effect to.

14 Neighbouring property owners should be advised of the proposed works at least seven days prior to the works commencing.

15 All measures (including dampening of loose soil) should be undertaken to ensure that dust, resulting from the proposed earthworks, does not escape the property boundary.

16 Where there is a risk that sediment may enter a watercourse at any stage during the earthworks, it is advised that the Otago Regional Council be consulted before works commence, to determine if the discharge of sediment will enter any watercourse and what level of treatment and/or discharge permit, if any, may be required.

17 All construction noise should comply with the following noise limits as per New Zealand Standard NZS 6803:1999:

Time of Week	Time Period	Leq (dBA)	L max(dBA)
Weekdays	0730-1800	75	90
	1800-2000	70	85
	2000-0630	45	75
Saturdays	0730-1800	75	90
	1800-2000	45	75
	2000-0630	45	75
Sundays and public Holidays	0730-1800	55	85
	1800-2000	45	75
	2000-0630	45	75

18 If the consent holder:

(a) discovers koiwi tangata (human skeletal remains), waahi taoka (resources of importance), waahi tapu (places or features of special significance) or other Maori artefact material, the consent holder shall without delay:

(i) notify the Consent Authority, Tangata whenua and Heritage New Zealand and in the case of skeletal remains, the New Zealand Police.

(ii) stop work within the immediate vicinity of the discovery to allow a site inspection by the Heritage New Zealand and the appropriate runanga and their advisors, who shall determine whether the discovery is likely to be extensive, if a thorough site investigation is required, and whether an Archaeological Authority is required.

Any koiwi tangata discovered shall be handled and removed by tribal elders responsible for the tikanga (custom) appropriate to its removal or preservation.

Site work shall recommence following consultation with the Consent Authority, the New Heritage New Zealand, Tangata whenua, and in the case of skeletal remains, the New Zealand Police, provided that any relevant statutory permissions have been obtained.

(b) discovers any feature or archaeological material that predates 1900, or heritage material, or disturbs a previously unidentified archaeological or heritage site, the consent holder shall without delay:

(i) stop work within the immediate vicinity of the discovery or disturbance; and

(ii) advise the Consent Authority, the Heritage New Zealand, and in the case of Maori features or materials, the Tangata whenua, and if required, shall make an application for an Archaeological Authority pursuant to the Heritage New Zealand Pouhere Taonga Act 2014; and

(iii) arrange for a suitably qualified archaeologist to undertake a survey of the site.

Site work shall recommence following consultation with the Consent Authority.

Issued at Dunedin this 30th day of September 2015

Sophie Lord
Planner

Appendix One - Approved plan for LUC-2015-389
[Scanned image –Not to Scale]

DUNEDIN CITY COUNCIL | kaunihera a-rohe o Ōtepoti

1 April 2020

Gee Jay Cee Enterprises Limited
PO Box 594
Dunedin 9054

Via email: jcrooks@tridenthomes.co.nz

Dear Gee Jay Cee Enterprises Limited

RESOURCE CONSENT APPLICATION: **LUC-2020-105**
31 OWHIRO AVENUE
MOSGIEL

Your application for resource consent was processed on a non-notified basis in accordance with sections 95A to 95G of the Resource Management Act 1991. The application was considered by a Senior Planner, under delegated authority, on 1 April 2020.

The Council has granted consent to the application with a condition. The assessment of the application, including the reasons for the decision, is set out in the report attached to this letter. The consent certificate is attached to the rear of this letter.

The consent certificate outlines the conditions that apply to your proposal. Please ensure that you have read and understand all of the consent conditions.

You may object to this decision or any condition within 15 working days of the decision being received, by applying in writing to the Dunedin City Council at the following address:

Senior Planner - Enquiries
Dunedin City Council
PO Box 5045
Dunedin 9054

You may request that the objection be considered by a hearings commissioner. The Council will then delegate its functions, powers and duties to an independent hearings commissioner to consider and decide the objection. Please note that you may be required to pay for the full costs of the independent hearings commissioner.

Alternatively, there may be appeal rights to the Environment Court. Please refer to section 120 of the Resource Management Act 1991. It is recommended that you consult a lawyer if you are considering this option.

You will be contacted in due course if you are due a partial refund or you have to pay additional costs for the processing of your application.

Please feel free to contact me if you have any questions.

Yours faithfully

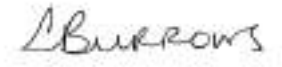

Lily Burrows
Planner

APPLICATION LUC-2020-105: 31 OWHIRO AVENUE, MOSGIEL

Department: Resource Consents

BACKGROUND

A deemed permitted boundary activity for an eaves breach was granted on 29 May 2019 (BACT-2019-32). A building consent for the dwelling (with attached garage) was granted on 5 June 2019 (ABA-2019-851). The application at the time of the building consent had a batter slope design for the earthworks and no retaining walls were proposed.

DESCRIPTION OF ACTIVITY

Resource consent is sought for a retaining wall supporting an existing cut along the boundary of the site at 31 Owhiro Avenue, Mosgiel. The proposed retaining wall will reach a maximum height of 1200mm, located almost directly on the eastern, southern and western boundaries. Note that the retaining wall was not authorised under ABA-2019-851. I also note that building consent may not be required for the wall if it is not surcharged as it is under 1.5m in height.

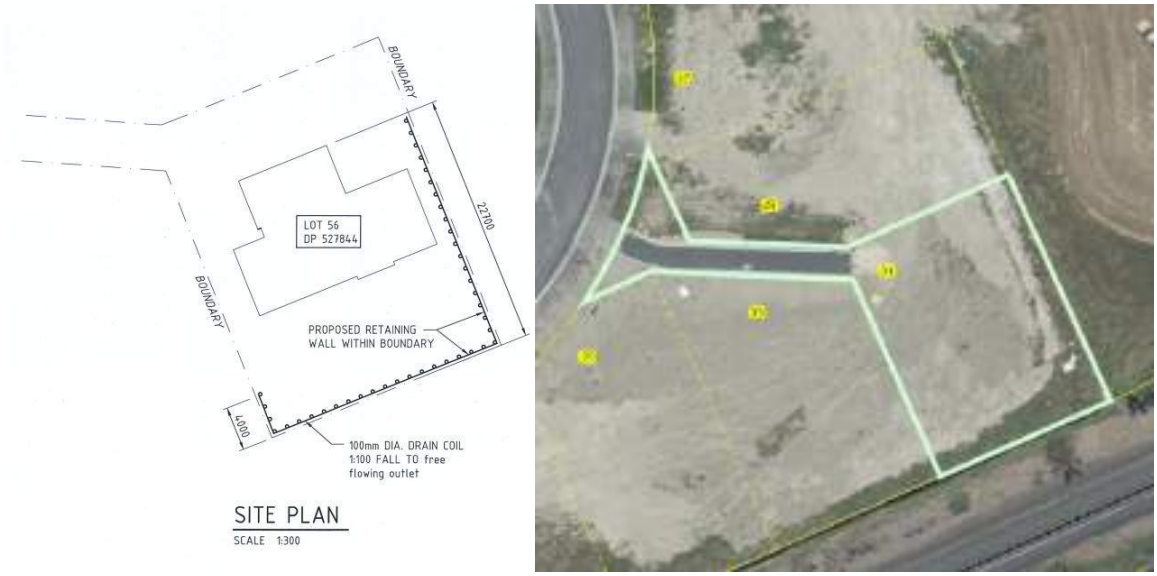

Figure 1: Site plan (left) 2018 aerial photograph of the site (right)

There are two consent notices registered against the property, these are attached to Appendix 2 of the report. The consent notices are not relevant to this current application.

The subject site is 840m^2 in area and generally flat but steepens towards the rear of the site where it adjoins the railway corridor. The site is legally described as LOT 56 DP 527844 (held in Record of Title 854588).

REASONS FOR APPLICATION

Dunedin currently has two district plans: the Operative Dunedin City District Plan 2006 (the "Operative District Plan", and the Proposed Second Generation Dunedin City District Plan (the "Proposed 2GP"). Until the Proposed 2GP is made fully operative, both district plans need to be considered in determining the activity status and deciding what aspects of the activity require resource consent.

The activity status of the application is fixed by the provisions in place when the application was first lodged, pursuant to section 88A of the Resource Management Act 1991. However, it is the provisions of both district plans in force at the time of the decision that must be had regard to when assessing the application.

Operative District Plan

The site is zoned as **General Residential 1** in the 2006 District Plan. The site adjoins a designation, being D419: Main South Railway - "Railway Purposes". The 2006 District Plan is **inoperative** for the assessment of this proposal.

Proposed 2GP

The subject site is zoned as **General Residential 1** and is associated with the following overlays:

- Hazard 3 (flood) overlay zone
- Hazard 3 (alluvial fan) overlay zone
- Dunedin Airport Flight Fan (Plan ID: D274)

The site also adjoins a designation, being D419: Main South Railway - "Railway Purposes".

The Proposed 2GP was notified on 26 September 2015, and some Proposed 2GP rules had immediate legal effect from this date. Some rules became fully operative following the close of submissions, where no submissions were received. Additional rules came into legal effect upon the release of decisions. Those additional rules become fully operative if no appeals are lodged or once any appeals have been resolved.

The proposal is defined as 'earthworks' which is a city-wide activity. As a result, only the City-wide Activities rules in the Proposed 2GP need consideration.

<u>Earthworks</u>
proposal breaches the following scale threshold:

- Rule 8A.5.4(1)(b); Earthworks that are over 600mm in height or depth must be set back from property boundaries by a distance at least equal to 1.5 times the maximum depth of cut, plus 300mm, as measured from the toe of the cut. The proposal breaches this rule by 2.7m to the boundary.

Activities that contravene this standard are **restricted discretionary activities.**

Council's discretion is restricted to the following matter(s):

- Effects on the stability of land, buildings and structures (Assessment Matter 8A.5.6.3(2)(a)). Earthworks and associated retaining structures are designed and located to avoid or minimise, as far as practicable, adverse effects on the stability of land, buildings and structures by being set back an adequate distance from property boundaries, buildings and cliffs.

National Environmental Standards

There are no National Environmental Standards relevant to this application.

Overall Status

Where an activity requires resource consent under more than one rule, and the effects of the activity are inextricably linked, the general principle from case law is that the different components should be bundled and the most restrictive activity classification applied to the whole proposal.

In this case, there is only one rule triggered. The proposal is therefore a **restricted discretionary activity.**

WRITTEN APPROVALS AND EFFECTS ASSESSMENT

Affected Persons

No affected persons forms were submitted with the application. No person or party is considered to be adversely affected by the activity. This is because the environmental effects of the proposal are limited to effects on parties that are less than minor.

Effects on the Environment

Permitted Baseline

Under sections 95D(b) and 104(2) of the Resource Management Act 1991, the Council may disregard an adverse effect of the activity on the environment if the district plan or a national environmental standard permits an activity with that effect.

In this situation, the permitted baseline comprises of:

1. A retaining wall supporting cut on the boundary that has been granted building consent, or
2. A retaining wall that is set back from the boundary by a distance at least equal to the height of the retaining walls, or
3. A retaining wall supporting cut with a change in ground level of 600mm or less.

It is considered that this is the appropriate baseline against which the activity should be considered. As a result, it is the effects arising from the proposal, beyond the permitted baseline, that are the crucial elements for consideration.

Receiving Environment

The existing and reasonably foreseeable receiving environment is made up of:

- The existing environment and associated effects from lawfully established activities;
- Effects from any consents on the subject site (not impacted by proposal) that are likely to be implemented;
- The existing environment as modified by any resource consents granted and likely to be implemented; and
- The environment as likely to be modified by activities permitted in the district plan.

For the subject site and surrounding area, the existing and reasonably foreseeable receiving environment comprises of low to medium density residential activity in a newly developing suburb of Mosgiel. The surrounding area is bound by the Main South Railway to the south, and Owhiro stream to the north. The neighbourhood is accessed off Hagart-Alexander Drive.

2018 Aerial photograph showing surrounding area, with subject site highlighted to bottom right.

It is against these that the effects of the activity, beyond the permitted baseline, must be measured.

Assessment Matters/Rules

Consideration is required of the relevant assessment matters in the Operative District Plan and the relevant assessment rules in the Proposed 2GP, along with the matters in any relevant national environmental standard. This assessment is limited to the matters to which the Council's discretion has been restricted. No regard has been given to any trade competition or any effects of trade competition.

1. *Effects on the stability of land, buildings and structures (Assessment Matter 8A.5.6.3(2)(a)).*
   Council's consultant engineer from Stantec has stated the following regarding the proposal:

> *'We have assessed the application in relation to the hazard register, street files and available aerial photography. We have not visited the site.*
> *We have the following comments to make regarding the application.*
>
> ***Proposal***
> *The proposed activity is to construct a retaining wall supporting a cut along the boundary with the adjacent lot.*
> *Site investigation reports have not been provided.*
> *Plans for the proposal are provided within the application.*
>
> ***Hazards***
> *From the Hazard Register, street files, and previously sent emails ; for both this title and nearby properties*
> - *Hazard ID 10111: Seismic – Intensified Shaking (Earthquake likely amplification)*
> - *Hazard ID 10106: Land Stability – Land Movement (active floodwater dominated)*
> - *Hazard ID 11582: Overland Flow Path (Flood Hazard Area 22)*
> - *Hazard ID 12074: Flood – Overland Flow Path (Upper Taieri Flood Level including 500mm Freeboard)*

The ORC Lower Taieri Floodplain hazards (September 2006) identify the property within zone I – where "Existing protection is provided to a 100 year (1% AEP) flood level, and floors are to be set 200mm above flood level."
This 200mm flooding relates to local ponding, and the dwelling should be set 200mm above any known local ponding levels.

This report was revised and updated by the Otago Regional Council Report on Natural Hazards on the Taieri Plains, Otago, Engineering and Hazards Committee, July 2012. Figure 4.10 of this report places the property within Area 20 – Mosgiel, with the flood hazard characteristics defined for this area as follows.

> *The flood hazards in this area are derived from the Owhiro Stream and the hill tributaries on its southern side. Flood hazard is primarily associated with overland flow, and in some places, the presence of an active, floodwater dominant alluvial fan (refer to Chapter 5). This area is sufficiently elevated to not be affected by the Taieri River or the Silver Stream.*

Global Setting
The underlying geology consists of alluvial material and is sloping by less than 12 degrees.

Earthworks / Excavations / Retaining Structures
The proposed works consists of a retaining wall against the neighboring lot boundary up to 1200mm high. The proximity to the boundary requires a specific design which has already been provided. The cuts to create the retaining wall have already been made.

Discussion
The engineering design provided appears to suggest that the site is good ground and provides a structural design for the wall on the boundary. Any hazards as a result of this may be controlled by conditions of consent and specific engineering design which has already been sought. The existing cuts that will be supported by a retaining wall have already been made and appear to be failing along the full width of the cut. This work should be undertaken asap to avoid undermining the neighboring lots if further instability is to occur.

The flood hazards at the site will not affect the proposed works, and no new dwellings are proposed.

We recommend that the application not be declined on the ground of known natural hazards.
There are no general potential instabilities of concern
The proposal will not create or exacerbate instabilities on this or adjacent properties

Advice
The proposed activity includes significant earthworks on a contained property, with other land and dwellings relatively close to the proposed works:

- *Temporary stability may be a concern on this project, and remains the responsibility of the developer.*
- *No earthworks may be undertaken until building consent has been granted.*
- *The works are close to the boundary, and the planner may wish to consider whether the neighbour is affected by the proposal.*
- *Prior to undertaking the work, a professional must assess the potential for instability on adjacent properties, as a result of the works.*
- *All temporary slopes shall be inspected and signed off by a suitably qualified individual.*
- *The excavations slopes shall be supported within 1 month of commencing the earthworks.*

Conditions
The following conditions are standard conditions, some of which are generic in order to address a potential of work that whilst not indicated, could conceivable occur at the site. We recommend that the following conditions be required:-

- *All walls retaining over 1.5m, or supporting a surcharge / slope, including terracing, require design, specification and supervision by appropriately qualified person/s*
- *Where the long-term stability of other's land or structures may rely upon the continued stability of retaining works, the designer must confirm that the retaining structure can be safely demolished following a complete design life without creating hazards for neighbouring properties.*
- *Slopes may not be cut steeper than 1:1 (45°) or two metres high without specific engineering design and construction*
- *Slopes may not be filled steeper than 2h:1v (27°) or two metres high without specific engineering design and construction*
- *Any modifications to stormwater flow or new culverts shall be designed by appropriately qualified person/s and ensure that overland stormwater flows are not interrupted and not increase any adverse effects from local ponding during storm rainfall events.'*

I have relied on the consultant engineer's comments to consider that the effects of the proposal will be less than minor on structure, building and slope stability. Due to the minor nature of the effects, and the permitted baseline that allows a cut to the boundary if a building consent is obtained there are not considered to be any affected parties to the proposal. Some of the recommended conditions and advice notes are not included within the consent certificate of this report, because they are not considered to be within the scope of the proposal and are not necessary to manage the effects. The wall is engineer designed, and the key effects issue is the already failing cut slopes. A condition is imposed promoting prompt completion of the wall but factoring in that delays may occur as a result of restrictions imposed by Covid 19.

2. *Cumulative Effects*
The effects from this proposal are not considered to add to the existing effects on the subject site or on adjoining sites such that the cumulative effects are more than minor.

NOTIFICATION ASSESSMENT

Public Notification

Section 95A of the Resource Management Act 1991 sets out a step-by-step process for determining public notification. Each step is considered in turn below.

Step 1: Mandatory public notification in certain circumstances

- Public notification has not been requested.
- There has been no failure or refusal to provide further information.
- There has been no failure to respond or refusal to a report commissioning request.
- The application does not involve the exchange of recreation reserve land.

Step 2: If not required by Step 1, public notification precluded in certain circumstances

- There are no rules or national environmental standards precluding public notification.
- The application does not involve: a controlled activity; a restricted discretionary or discretionary subdivision; a restricted discretionary or discretionary residential activity; a boundary activity; nor, an activity prescribed in regulations as being precluded from public notification. As a result, public notification is not precluded under Step 2.

Step 3: If not precluded by Step 2, public notification required in certain circumstances

- There are no rules or national environmental standards requiring public notification.
- The activity will not have, or be likely to have, adverse effects on the environment that are more than minor.

Step 4: Public notification in special circumstances

- There are no special circumstances that warrant the application being publicly notified. There is nothing exceptional or unusual about the application that makes public notification desirable.

Limited Notification

Section 95B of the Resource Management Act 1991 sets out a step-by-step process for determining limited notification. Each step is considered in turn below.

Step 1: Certain affected groups and affected persons must be notified

- The activity is not in a protected customary rights area; the activity is not an accommodated activity in a customary marine title area; and, the activity is not on or adjacent to, or might affect, land that is the subject of a statutory acknowledgement.

Step 2: If not required by Step 1, limited notification precluded in certain circumstances

- There are no rules or national environmental standards precluding limited notification.
- The application does not involve: a controlled activity that is not a subdivision; nor an activity prescribed in regulations as being precluded from limited notification.

Step 3: If not precluded by Step 2, certain other affected persons must be notified

- The application does not involve: a boundary activity; nor, an activity prescribed in regulations that prescribe who is an affected person.
- There are no persons where the activity's adverse effects on the person are minor or more than minor (but are not less than minor).

Step 4: Further notification in special circumstances

- There are no special circumstances that warrant the application being limited notified. There is nothing exceptional or unusual about the application that makes limited notification to any other persons desirable.

SUBSTANTIVE DECISION ASSESSMENT

Effects

In accordance with section 104(1)(a) of the Resource Management Act 1991, the actual and potential adverse effects associated with the proposed activity have been assessed and outlined above. It is considered that the adverse effects on the environment arising from the proposal are no more than minor.

Offsetting or Compensation Measures

In accordance with section 104(1)(ab) of the Resource Management Act 1991, there are no offsetting or compensation measures proposed or agreed to by the applicant that need consideration.

Objectives and Policies

In accordance with section 104(1)(b) of the Resource Management Act 1991, the objectives and policies of the Operative District Plan and the Proposed 2GP were taken into account when assessing the application.

Operative District Plan

The proposal is considered to be consistent with the following objectives and policies:

- **Objective 4.2.1 and Policy 4.3.1 (Sustainability Section)**
  These seek to enhance and maintain the amenity values of the Dunedin area.
- **Objective 8.2.1 and Policy 8.3.1 (Residential Section)**
  These seek to ensure that the adverse effects on the amenity values and character of residential areas are avoided remedied or mitigated.
- **Objective 17.2.3 and Policy 17.3.9 (Earthworks Section)**
  These seek to ensure that earthworks in Dunedin are undertaken in a manner that does not put the safety of people or property at risk and that minimises adverse effects on the environment.

Proposed 2GP

The proposal is considered to be consistent with the following Proposed 2GP objectives and policies:

- **Objective 15.2.2 and Policy 15.2.2.1 (Residential Zones)**
  These seek to ensure that residential activities, development, and subdivision activities provide high quality on-site amenity for residents.
- **Objective 15.2.3 and Policy 15.2.3.1 (Residential Zones)**
  These seek to ensure that activities in residential zones maintain a good level of amenity on surrounding residential properties and public spaces.
- **Objective 8A.2.1 and Policy 8A.2.1.1 (Earthworks)**
  These seek to ensure that earthworks are enabled while avoiding, or adequately mitigating, adverse effects on a) visual amenity and character; b) the stability of land, buildings and structures, and c) surrounding properties.

Objectives and Policies Assessment

Greater weight has been given to the 2GP in the assessment of this proposal, because there have not been any relevant appeals and the 2GP is fully operative.

Other Matters

Having regard to section 104(1)(c) of the Resource Management Act 1991, no other matters are considered relevant.

Part 2

Based on the findings above, it is evident that the proposal would satisfy Part 2 of the Resource Management Act 1991. Granting of consent would promote the sustainable management of Dunedin's natural and physical resources.

RECOMMENDATION

After having regard to the above planning assessment, I recommend that:

1. This application be processed on a non-notified basis, pursuant to sections 95A and 95B of the Resource Management Act 1991.

2. The Council grant consent to the proposed activity under delegated authority, in accordance with sections 104 and 104C of the Resource Management Act 1991.

Lily Burrows
Planner

Date: 1 April 2020.

DECISION

I have read both the notification assessment and substantive decision assessment in this report. I agree with both recommendations above.

Under delegated authority on behalf of the Dunedin City Council, I accordingly approve the granting of resource consent to the proposal:

Pursuant to Part 2 and sections 34A(1), 104 and 104C of the Resource Management Act 1991, and the provisions of the Operative Dunedin City District Plan 2006 and the Proposed Second Generation Dunedin City District Plan, the Dunedin City Council ***grants*** *consent to a* ***restricted discretionary activity*** *being the establishment of a retaining wall supporting cut on a boundary on the site at 31 Owhiro Avenue, Mosgiel, legally described as LOT 56 DP 527844 (Record of Title 854588), subject to the conditions imposed under section 108 of the Act, as shown on the attached certificate.*

John Sule
Senior Planner

Date: 1 April 2020.

DUNEDIN CITY COUNCIL | kaunihera a-rohe o Ōtepoti

Consent Type: Land Use Consent

Consent Number: LUC-2020-105

Purpose: The establishment of a retaining wall supporting cut on a boundary.

Location of Activity: 31 Owhiro Avenue, Mosgiel.

Legal Description: LOT 56 DP 527844 (Record of Title 854588).

Lapse Date: 1 April 2025, unless the consent has been given effect to before this date.

Conditions:

1. *The proposed activity must be undertaken in general accordance with the approved plans attached to this certificate as Appendix One, and the information provided with the resource consent application received by the Council on 27 February 2020, except where modified by the following conditions.*

2. *To ensure failing cut slopes do not deteriorate further the retaining wall is to be established as soon as is practicable but must be completed with within 1 month of any Covid 19 restriction on construction activity being uplifted.*

Advice Notes:

Earthworks

1. Temporary stability may be a concern on this project and it remains the responsibility of the site owner.

General

2. In addition to the conditions of a resource consent, the Resource Management Act 1991 establishes through sections 16 and 17 a duty for all persons to avoid unreasonable noise, and to avoid, remedy or mitigate any adverse effect created from an activity they undertake.

3. Resource consents are not personal property. The ability to exercise this consent is not restricted to the party who applied and/or paid for the consent application.

4. It is the responsibility of any party exercising this consent to comply with any conditions imposed on the resource consent prior to and during (as applicable) exercising the resource consent. Failure to comply with the conditions may result in prosecution, the penalties for which are outlined in section 339 of the Resource Management Act 1991.

5. The lapse period specified above may be extended on application to the Council pursuant to section 125 of the Resource Management Act 1991.

6. This is a resource consent. Please contact the Council's Building Services Department, about the building consent requirements for the work.

Issued at Dunedin on 1 April 2020

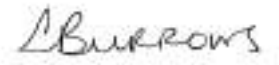

Lily Burrows
Planner

Appendix One: Approved Plan/s for LUC-2020-105 (scanned image(s), not to scale)

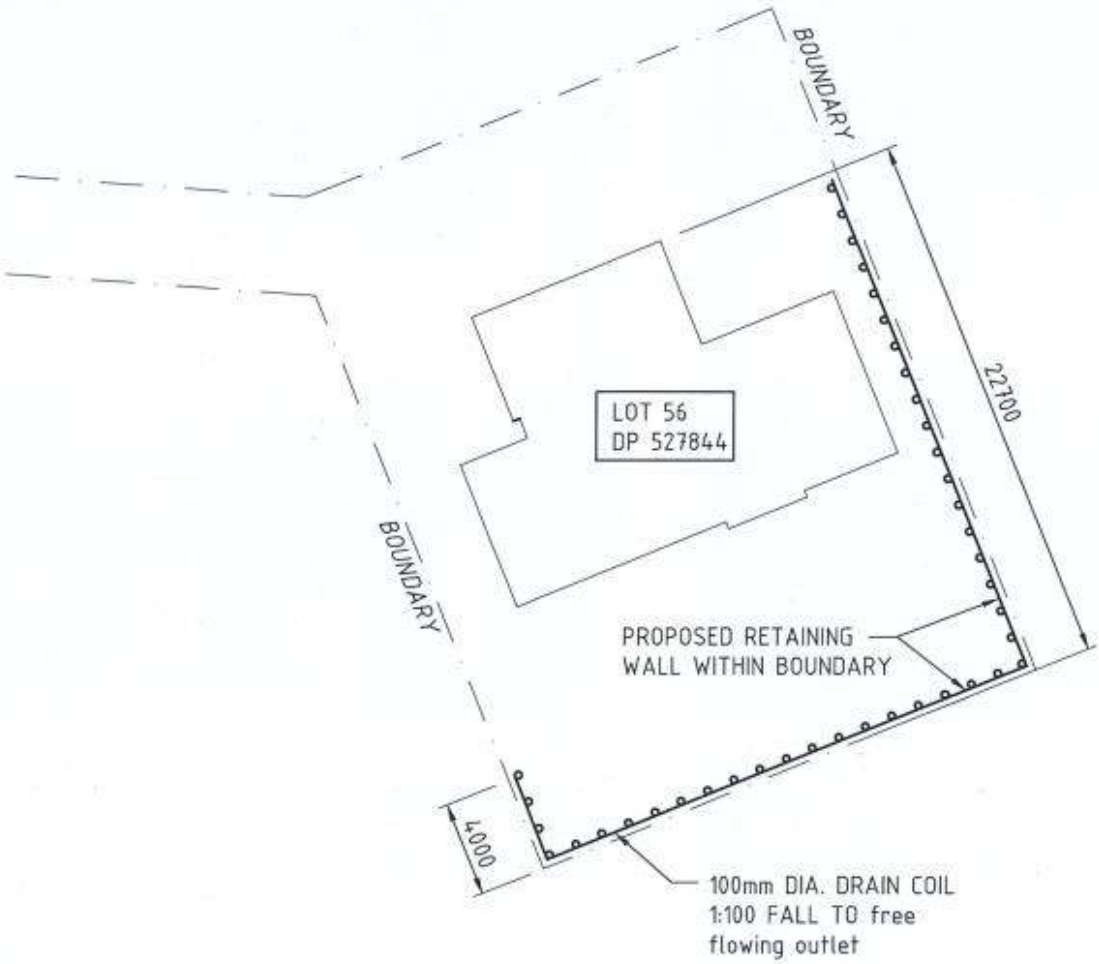

SITE PLAN

SCALE 1:300

Appendix 2: Consent Notices

CONSENT NOTICE 11281712.5

IN THE MATTER of Section 221 of the Resource Management Act 1991

AND

IN THE MATTER of Application for Subdivision Consent No SUB-2014-91/D

CONSENT NOTICE

Whereas Council has granted consent to the proposed subdivision comprised in Deposited Plan 527844 subject to the following conditions, which are required to be complied with on a continuing basis by the owners and subsequent owners of the land or part thereof being those conditions specified in the operative part.

Operative Part

This condition relates to:

Lots 56-58 DP 527844 and shall be placed on Certificates of Title 854588-854590.

The condition of this consent is as follows:

"All buildings, balconies and decks on this site shall be set back from the boundary with the railway corridor by a minimum of 10.0m.

Buildings shall be designed, constructed and maintained to ensure the following internal design noise limits are not exceeded, and shall take into account future use of the Main South Railway Line by the addition of 3dB to existing measured or calculated sound levels.

Receiving Environment (New, relocated or altered)	***Criterion***
Residential - Bedrooms	*35 $dB_{LAeq,\ 1\ hour}$*
Residential - Habitable Spaces	*40 $dB_{LAeq,\ 1\ hour}$*
Primary Outdoor Amenity Areas	*60 $dB_{LAeq,\ 1\ hour}$*

Where it is necessary to have windows closed to achieve the acoustic design requirements above, an alternative ventilation system shall be installed to provide thermal comfort. To achieve thermal comfort, the following requirements for a ventilation system are recommended:

- *A quantity of air shall be provided to achieve the requirements of Clause G4 of the New Zealand Building Code. At the same time as meeting this requirement, the sound of the system shall not exceed 30dB LAeq(30s) when measured 1.0m away from any grille or diffuser.*

- *Either: air conditioning shall be provided; or a high air flow rate setting shall provide at least 15 air changes per hour (ACH) in the principal living space and at least 5 CH in all other habitable spaces.*
- *At the same time as meeting the above requirement in b), the sound of the system shall not exceed 40dB LAeq(30s) in the principal living space and 35dB LAeq(e0s) in all other habitable spaces, when measured 1.0m away from any grille or diffuser.*
- *The internal air pressure shall be no more than 10 Pa above ambient air pressure due to the mechanical ventilation.*
- *Where a high air flow rate setting is provided, the system shall be controllable by the occupants to be able to alter the ventilation rate with at least three equal stages up to the high setting.*

Any new building developed for a noise sensitive activity within these sites shall comply with Class C vibration limits in NS 8176E:2005.

These conditions specified in this consent notice do not apply to non-residential, unattached structures (such as garages and sheds) which may be erected within the stated set back area.

The property owner shall recognise that the property is located adjacent to the Main South Line. The lawful operation of this railway line may result in the occupier experiencing noise and vibration effects. The owners of the land acknowledge that these effects are typical of living near the Main South Line and will not therefore make complaints to the Dunedin City Council or any other party concerning such effects arising from the lawful operation of the Main South Line."

DATED at Dunedin this 30th day of OCTOBER 2018

Signed for and on behalf of
Dunedin City Council
by its Authorised Officer .....

CONSENT NOTICE 11281712.8

IN THE MATTER of Section 221 of the
Resource Management Act 1991

AND

IN THE MATTER of Application for
Subdivision Consent No SUB-2014-91/D

CONSENT NOTICE

Whereas Council has granted consent to the proposed subdivision comprised in Deposited Plan 527844 subject to the following conditions, which are required to be complied with on a continuing basis by the owners and subsequent owners of the land or part thereof being those conditions specified in the operative part.

Operative Part

This condition relates to:

Lots 40-76 DP 527844 and shall be placed on Certificates of Title 854572-854608.

The condition of this consent is as follows:

"All permanent structures established on this site shall be designed and constructed to the minimum floor levels described below. The purpose of this consent notice is to support stormwater management-

Lots 40-53 and 60-76:	*121.30m Otago Datum*
Lots 54-59:	*121.40m Otago Datum."*

DATED at Dunedin this 30th day of OCTOBER 2018

Signed for and on behalf of
Dunedin City Council
by its Authorised Officer .....

View Instrument Details

Instrument No.	11281712.5
Status	Registered
Date & Time Lodged	22 Nov 2018 10:43
Lodged By	Smith, Nadine Marie
Instrument Type	Consent Notice (under s221(4)(a) Resource Management Act 1991)

Affected Records of Title	Land District
837886	Otago
837887	Otago
837891	Otago

Annexure Schedule: Contains 2 Pages.

Signature

Signed by Alistair John Moore as Territorial Authority Representative on 14/11/2018 02:35 PM

*** End of Report ***

© Crown Copyright, Land Information New Zealand

IN THE MATTER of Section 221 of the
Resource Management Act 1991

AND

IN THE MATTER of Application for
Subdivision Consent No SUB 2014 91/D

CONSENT NOTICE

Whereas Council has granted consent to the proposed subdivision comprised in Deposited Plan 527844 subject to the following conditions, which are required to be complied with on a continuing basis by the owners and subsequent owners of the land or part thereof being those conditions specified in the operative part

Operative Part

This condition relates to:

Lots 56-58 DP 527844 and shall be placed on Certificates of Title 854588-854590.

The condition of this consent is as follows:

"All buildings, balconies and decks on this site shall be set back from the boundary with the railway corridor by a minimum of 10.0m.

Buildings shall be designed, constructed and maintained to ensure the following internal design noise limits are not exceeded, and shall take into account future use of the Main South Railway Line by the addition of 3dB to existing measured or calculated sound levels.

Receiving Environment (New, relocated or altered)	***Criterion***
Residential Bedrooms	*35 $dB_{LAeq,1hour}$*
Residential - Habitable Spaces	*40 $dB_{LAeq,1hour}$*
Primary Outdoor Amenity Areas	*60 $dB_{LAeq,1hour}$*

Where it is necessary to have windows closed to achieve the acoustic design requirements above, an alternative ventilation system shall be installed to provide thermal comfort. To achieve thermal comfort, the following requirements for a ventilation system are recommended:

- *A quantity of air shall be provided to achieve the requirements of Clause G4 of the New Zealand Building Code. At the same time as meeting this requirement, the sound of the system shall not exceed 30dB LAeq(30s) when measured 1.0m away from any grille or diffuser.*

- *Either: air conditioning shall be provided, or a high air flow rate setting shall provide at least 15 air changes per hour (ACH) in the principal living space and at least 5 CH in all other habitable spaces.*
- *At the same time as meeting the above requirement in b), the sound of the system shall not exceed 40dB LAeq(30s) in the principal living space and 35dB LAeq(e0s) in all other habitable spaces. when measured 1 0m away from any grille or diffuser*
- *The internal air pressure shall be no more than 10 Pa above ambient air pressure due to the mechanical ventilation.*
- *Where a high air flow rate setting is provided. the system shall be controllable by the occupants to be able to alter the ventilation rate with at least three equal stages up to the high setting.*

Any new building developed for a noise sensitive activity within these sites shall comply with Class C vibration limits in NS 8176E:2005

These conditions specified in this consent notice do not apply to non-residential, unattached structures (such as garages and sheds) which may be erected within the stated set back area

The property owner shall recognise that the property is located adjacent to the Main South Line The lawful operation of this railway line may result in the occupier experiencing noise and vibration effects. The owners of the land acknowledge that these effects are typical of living near the Main South Line and will not therefore make complaints to the Dunedin City Council or any other party concerning such effects arising from the lawful operation of the Main South Line."

DATED at Dunedin this 30th day of October 2016

Signed for and on behalf of
Dunedin City Council
by its Authorised Officer .....

View Instrument Details

Instrument No.	112817128
Status	Registered
Date & Time Lodged	22 Nov 2018 10:43
Lodged By	Smith, Nadine Maree
Instrument Type	Consent Notice under s221(4)(a) Resource Management Act 1991

Affected Records of Title	Land District
854372	Otago
854373	Otago
854374	Otago
854375	Otago
854376	Otago
854377	Otago
854378	Otago
854379	Otago
854380	Otago
854381	Otago
854382	Otago
854383	Otago
854384	Otago
854385	Otago
854386	Otago
854387	Otago
854388	Otago
854389	Otago
854390	Otago
854391	Otago
854392	Otago
854393	Otago
854394	Otago
854395	Otago
854396	Otago
854397	Otago
854398	Otago
854399	Otago
854400	Otago
854401	Otago
854402	Otago
854403	Otago
854404	Otago
854405	Otago
854406	Otago
854407	Otago
854408	Otago

Annexure Schedule: Contains 1 Page

© Copyright for Land Information New Zealand

Signature

Signed by Alistair John Alwyn as Territorial Authority Representative on 14/11/2018 02:30 PM

***** End of Report *****

IN THE MATTER of Section 221 of the
Resource Management Act 1991

AND

IN THE MATTER of Application for
Subdivision Consent No SUB-2014-91/D

CONSENT NOTICE

Whereas Council has granted consent to the proposed subdivision comprised in Deposited Plan 527844 subject to the following conditions, which are required to be complied with on a continuing basis by the owners and subsequent owners of the land or part thereof being those conditions specified in the operative part

Operative Part

This condition relates to

Lots 40-76 DP 527844 and shall be placed on Certificates of Title 854572-854608.

The condition of this consent is as follows:

> *"All permanent structures established on this site shall be designed and constructed to the minimum floor levels described below. The purpose of this consent notice is to support stormwater management-*
>
> *Lots 40-53 and 60-76: 121.30m Otago Datum*
> *Lots 54-59: 121.40m Otago Datum."*

DATED at Dunedin this 30th day of OCTOBER 2018

Signed for and on behalf of
Dunedin City Council
by its Authorised Officer .....