GEN 5

ISAAC Nemesis 83x Series Quick Start Guide

Welcome to ISAAC Nemesis! We're excited to guide you through the setup process step by step. Please keep this document handy as your reference.

1. Connect Network Cables

- Nemesis systems come with **two Hosts** and **one Quorum Appliance**.
- Locate the ports on the back of your ISAAC units.
- Connect a network cable from **port 1 of your quorum appliance** to the **quorum port on Host 1**.
- Connect a network cable from **port 2 of your quorum appliance** to the **quorum port on Host 2**.
- Connect the two hosts to each other using the provided SFP cables. **The ports are labeled 3 and 4** on the diagram.
- Connect the **iDrac port on each host** to your network switch.
- For each host, **connect any of the 1G ports** to your network switch.

Note: In some setups, there are separate networks for operations and maintenance. Connect accordingly.

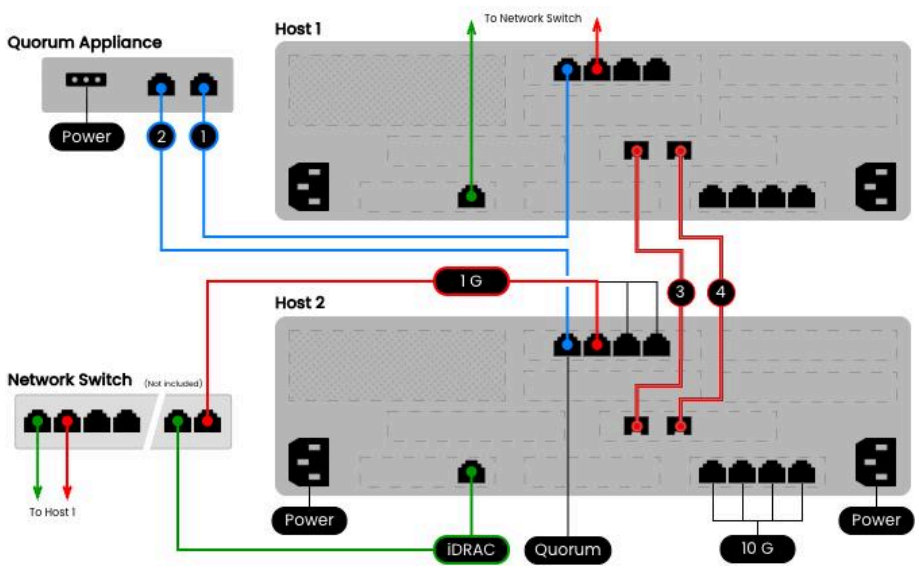

2. Power Up

- Connect both power supply cables on each Host.
- Install the red ISAAC faceplate on the two Hosts.
- Connect the power supply provided with the Quorum Appliance to the power connector of the unit (the Quorum Appliance will automatically boot-up).
- Press the power button on the front of each Host to boot up your ISAAC Nemesis.

Never unplug or cut power off your system while the system is running, as this can lead to corruption and prevent it from starting up. Always use proper graceful shutdown either using the Workspace > Infrastructure > Platform > Power-off button, or the Hypervisor shutdown command (refers to the User Manual for instructions).

Quorum Appliance Notes:

- If you want to use your own power supply, the Quorum Appliance requires 8-24VDC/max 22W (provided power supply is a 12VDC/5A) and we recommend using 22 AWG 3-conductor copper wire minimum over a maximum of 2 meters (6 1/2 feet).
- For network cabling, use Cat5e or Cat6 cables.
- Earth ground all devices in the same circuit at the power supply.

3. iDRAC Configuration

- iDRAC is configured to use DHCP by default. After connecting it to the network, an IP address will be assigned automatically. To find the assigned address, check your DHCP server if you have access to it, or use a network scanning tool to identify the iDRAC on your network.

Note: iDRAC is an out of band management interface designed by DELL - think of it as physical controls for your device, when you are unable to be physically present.

4. Accessing iDRAC

- Connect to iDRAC from another computer connected to the network switch, using the identified IP address in the step above for the first Host.
- Login using the credentials found on the **luggage tag** of the first Host or provided with this document.

Note: The luggage tag is located on the lower right side of your ISAAC Host units when looking at the front.

5. Proxmox Setup

- In iDRAC web interface, navigate through **System** > **Host OS** > **Network Interfaces**.
- List all the network interfaces and locate the one named **vmbr0** and notate the IPAddress which will be used to connect to the Proxmox management interface.

Tip: Proxmox is the Host management platform powering your ISAAC Host units. ISAAC Nemesis runs a standard version of Proxmox. If you are familiar with Proxmox, you already know the basics of using your ISAAC system. Robust Proxmox tutorials and instructions are available across the internet.

6. Accessing Proxmox

- Open a new browser window and connect to Proxmox using the Proxmox management interface IP address identified above on port **8006** and the credentials provided with your system.

7. ISAAC Virtual Machine

- The ISAAC's Virtual Machine called ISAAC Workspace, contains all of the proprietary ISAAC software on your device. This Virtual Machine must always be running to have access to any of ISAAC Workspace's services.
- To check the IP address of ISAAC Workspace expand the Datacenter menu as well as the first Host named **isaac-pve-1** menu in the left-side of Proxmox management interface.
- To open the ISAAC Virtual Machine information pane in Proxmox, find and click on the virtual machine named ISAAC. Select the Summary sub-menu, identify the tab named **isaac-workspace** and inside the tab, the section labeled **IPs** and notate the IP Address listed.

8. ISAAC Workspace

- The IP Address listed in Proxmox for the ISAAC Virtual Machine is the IP address of the ISAAC Workspace. Connect to this IP Address in a separate browser window to begin your ISAAC Workspace experience!
- Follow the prompts to name your ISAAC Workspace, choose a time zone, and set up the admin account password.

9. NTP Configuration

- Nemesis series systems require synchronized time on each host. The default host configuration uses NTP, targeting 2.debian.pool.ntp.org. This requires permanent internet access, and it is recommended to have a local NTP Server available for use by the whole system instead. Refer to the **NTP Configuration** chapter of the User Manual for further information and instruction on configuring the host(s).

Congratulations! You're all set to unleash the full power of ISAAC Workspace.