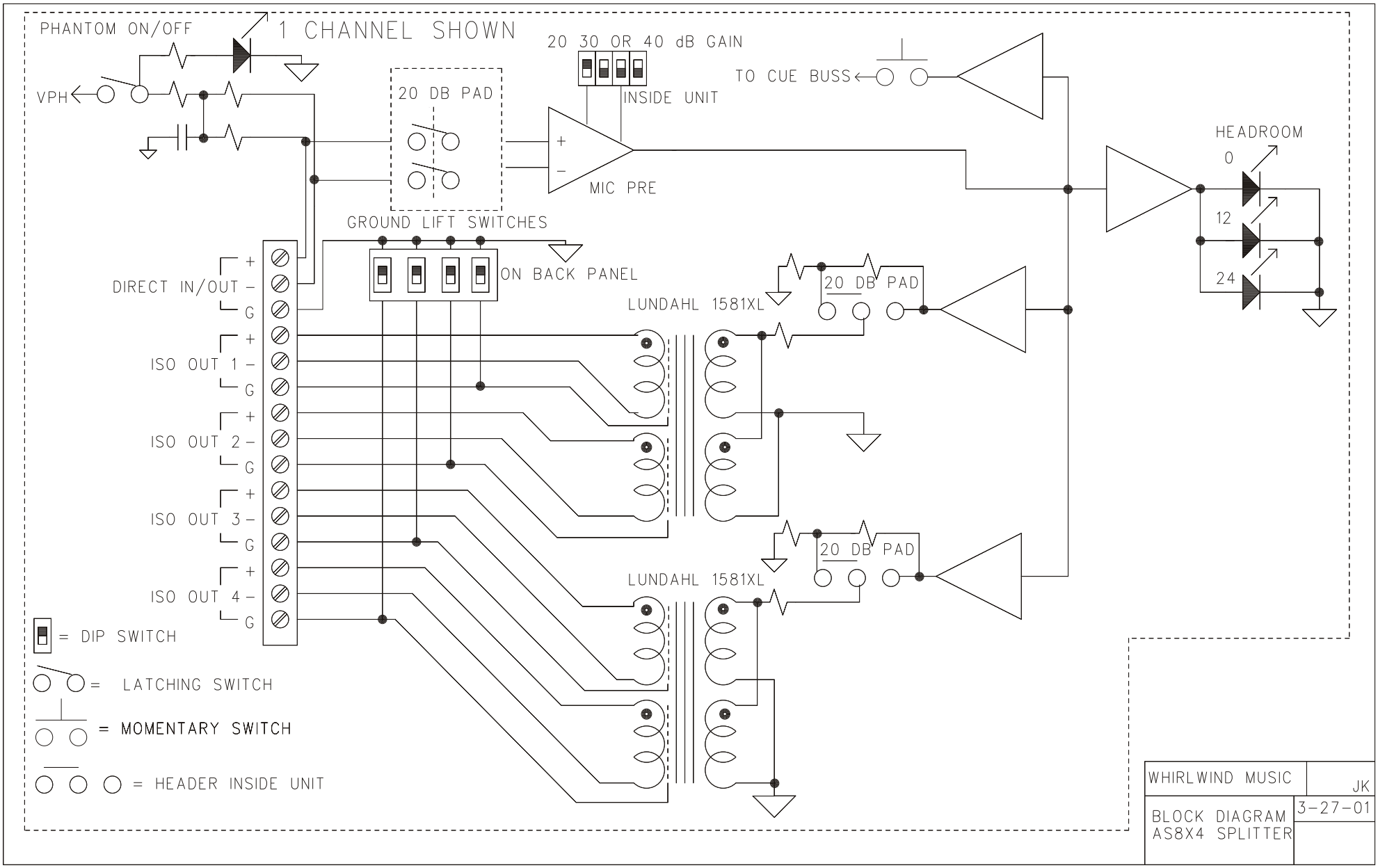
PHANTOM ON/OFF
1 CHANNEL SHOWN
VPH
20 DB PAD
20 30 OR 40 dB GAIN
INSIDE UNIT
TO CUE BUSS
MIC PRE
HEADROOM
0
12
24
GROUND LIFT SWITCHES
ON BACK PANEL
DIRECT IN/OUT
ISO OUT 1
ISO OUT 2
ISO OUT 3
ISO OUT 4
LUNDAHL 1581XL
20 DB PAD
LUNDAHL 1581XL
20 DB PAD
= DIP SWITCH
= LATCHING SWITCH
= MOMENTARY SWITCH
= HEADER INSIDE UNIT
WHIRLWIND MUSIC
JK
BLOCK DIAGRAM
AS8X4 SPLITTER
3-27-01