POCKET DOOR RACK
OVERALL HEIGHTS = "H"
8 SPACE RACK = 25.00
10 SPACE RACK = 28.50
12 SPACE RACK = 32.00
14 SPACE RACK = 35.50
16 SPACE RACK = 39.00
18 SPACE RACK = 42.50
20 SPACE RACK = 46.00
22 SPACE RACK = 49.50
24 SPACE RACK = 53.00

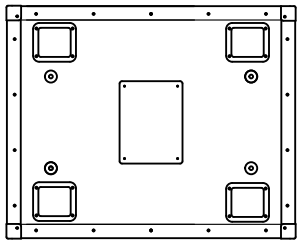

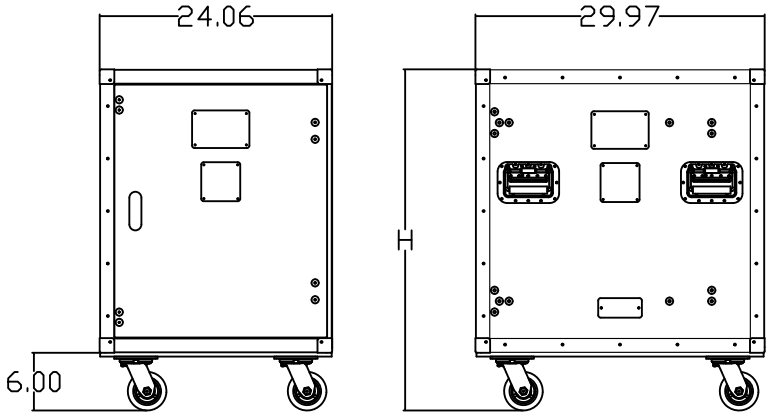

Pocket Rack Cases
6/12/2023
R&D
-

STANDARD RACK
OVERALL HEIGHTS = "H"
8 SPACE RACK = 21.50
10 SPACE RACK = 25.00
12 SPACE RACK = 28.50
14 SPACE RACK = 32.00
16 SPACE RACK = 35.50
18 SPACE RACK = 39.00
20 SPACE RACK = 42.50
22 SPACE RACK = 46.00
24 SPACE RACK = 49.50

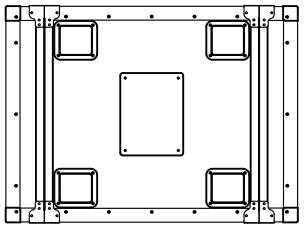

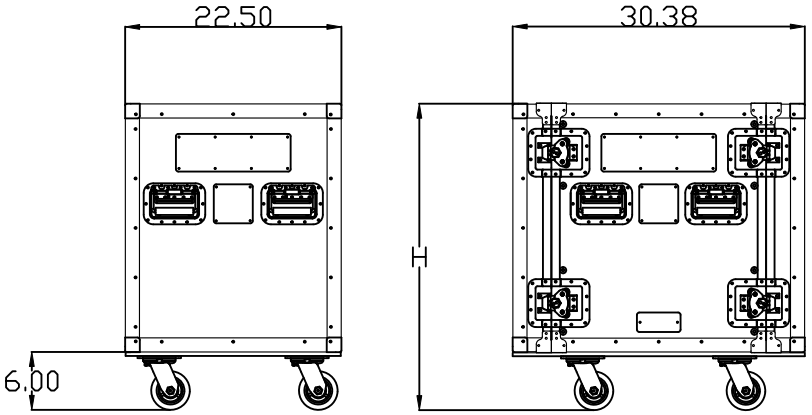

Rack Cases
6/12/2023
R&D
-
N/A
MS040417-01KS