CANZAC® GROUP

Improving the performance of concrete worldwide©



ARMOUR JOINTS

MONOPOUR / ARMOUR JOINT / TERAJOINT

INSTALLATION INSTRUCTIONS

SET-OUT & JOINT INSTALLATION

CANZAC TERAJOINT is supplied in 3 m lengths with adjustable fixing feet.

1 **Prepare the sub-base**

Prepare the sub-base as level as possible to the slab drawing. The joint is manufactured 5 mm short of finished floor level (FFL) for adjustment on site.

2 **Set out the joint line**

Set string lines to the layout, location and height shown on the slab drawing.

3 **Position the joint**

Lay the lengths along the string line with the plastic dowel sleeves all on the same side. Join the overlaps with the supplied dowel bushes, nylon bolts and nuts. Cut the final length to suit, allowing for the specified isolation at columns or walls.

CANZAC ADJUSTABLE FEET

Use the grub screws on the CANZAC adjustable feet to set the steel rails to finished floor level (FFL). Follow the connection and levelling checks on page 2.



TERAJOINT POSITIONED ON CANZAC ADJUSTABLE FEET



ARMOUR JOINTS

MONOPOUR / ARMOUR JOINT / TERAJOINT

INSTALLATION INSTRUCTIONS

Connect the 3 m lengths

Each length has a 10 × 16 mm connection slot. Use the supplied nylon bolts to connect adjacent lengths. Do not use steel bolts at these connections. Leave 1–2 mm between adjacent steel top strips to allow for movement along the joint.

Adjust to finished floor level

Use a dumpy level to check the rail height. Adjust the feet using their grub screws. Work from one end of each 3 m length to the middle, then to the other end.

Check line, level and plumb

Check that the joint is plumb and both rails are level across the joint. Recheck the string line and finished floor level before concrete placement.



ADJUSTABLE FOOT IN POSITION
Use the built-in grub screws to set the rail height.

CANZAC ADJUSTABLE-FOOT ASSEMBLY

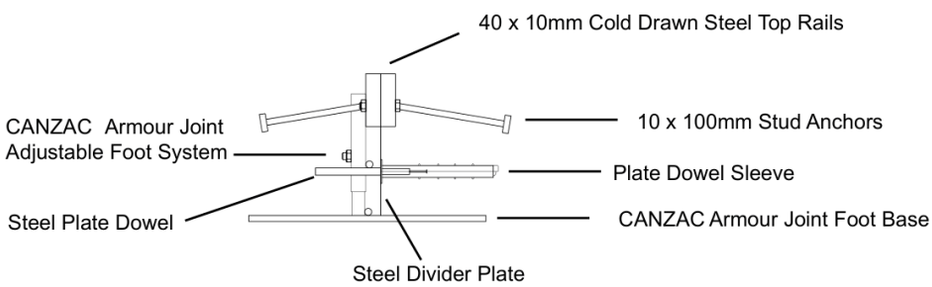



ARMOUR JOINTS

MONOPOUR / ARMOUR JOINT / TERAJOINT

INSTALLATION INSTRUCTIONS

4 **Pour and consolidate the concrete**

Once the rails are aligned, level and secure, place concrete to the top of the rails. Consolidate thoroughly along the joint with a suitable vibrating poker, paying particular attention to the plate dowels and sleeves so no air pockets are left around them. Both sides may be poured at the same time when set up for a simultaneous pour.

FINISH FLUSH WITH THE TOP RAILS

Finish the concrete at the top of the steel rails, not above or below. Remove slurry from the top of the steel during finishing.



CONCRETE PLACEMENT



ADJACENT BAY AFTER FINISHING



MONOPOUR / ARMOUR JOINT / TERAJOINT

INSTALLATION INSTRUCTIONS

FINISH LEVEL & JOINT INTERSECTIONS

The top of the steel rails is the finished floor level. Use the sections below to check the concrete finish on both sides of the joint.

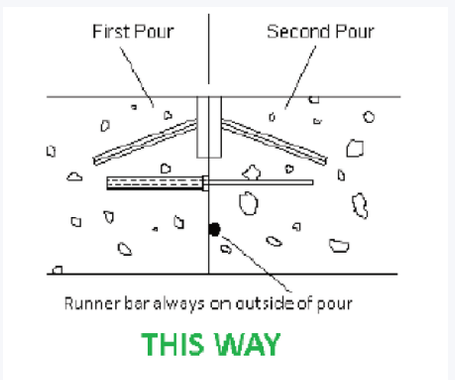

FLUSH WITH RAILS

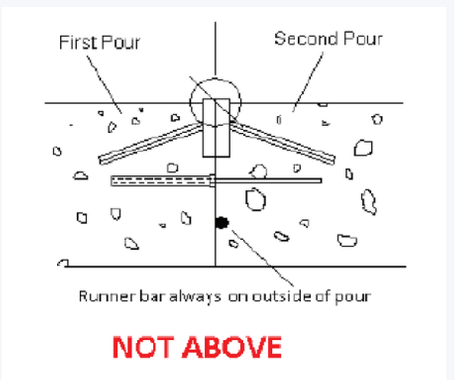

NOT ABOVE RAILS

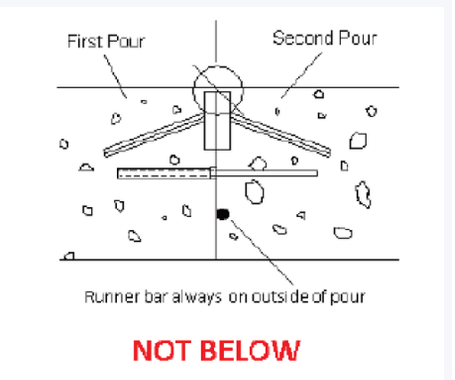

NOT BELOW RAILS

Finishing checks

- Set the steel rails to finished floor level and finish the concrete flush on both sides.
- Remove any concrete slurry from the top of the joint during finishing.
- Where a slab sawcut crosses the joint, continue the cut through the steel.
- Cut fully through the steel at each joint intersection so the adjoining lengths can move independently. See page 5 for the intersection layouts.



ARMOUR JOINTS

MONOPOUR / ARMOUR JOINT / TERAJOINT

INSTALLATION INSTRUCTIONS

INTERSECTION SAWCUT DETAILS

SLABS WITH SAWCUTS

The day after pouring, cut completely through the steel at each joint intersection and wherever a slab sawcut crosses the steel joint.

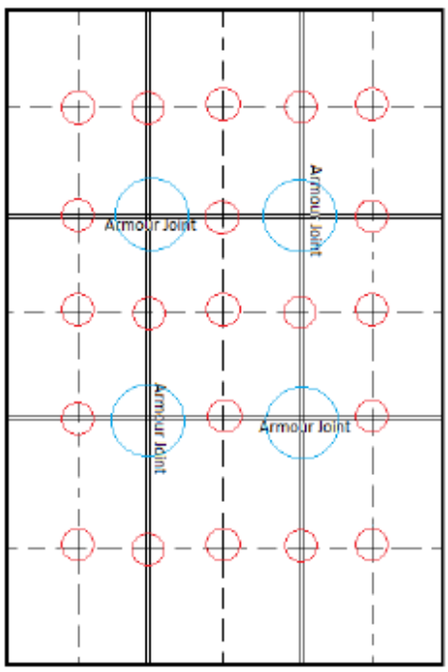

FACTORY-MADE INTERSECTIONS

Use CANZAC factory-manufactured intersections, available in 3-way and 4-way. Do not butt joint lengths together at intersections.

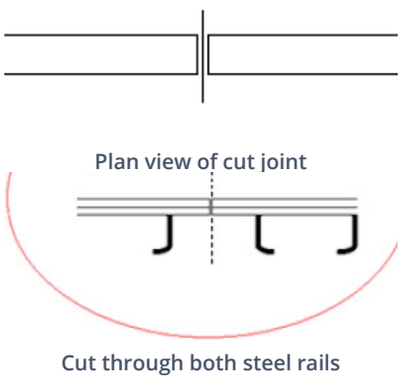

SLABS WITHOUT SAWCUTS

The detail below shows installed 4-way intersections.

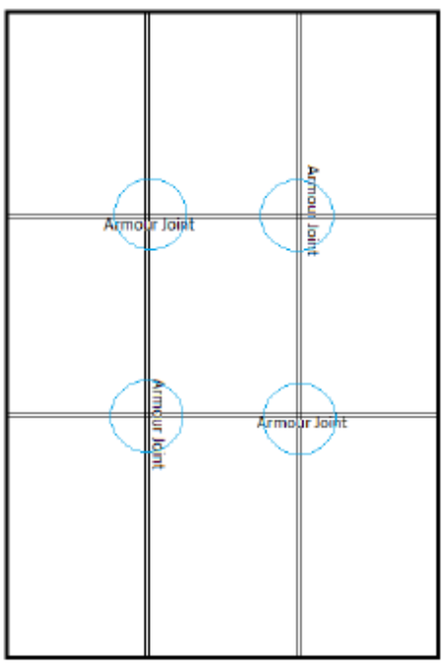

READING THE LAYOUTS

Use the slab layout to locate the cuts. Where a cut intersects the steel joint, cut through both rails.



ARMOUR JOINTS

MONOPOUR / ARMOUR JOINT / TERAJOINT

INSTALLATION INSTRUCTIONS

PEG & FOOT FIXING / SIMULTANEOUS POURS

MASONRY BOLTING PATTERN / MONOPOUR

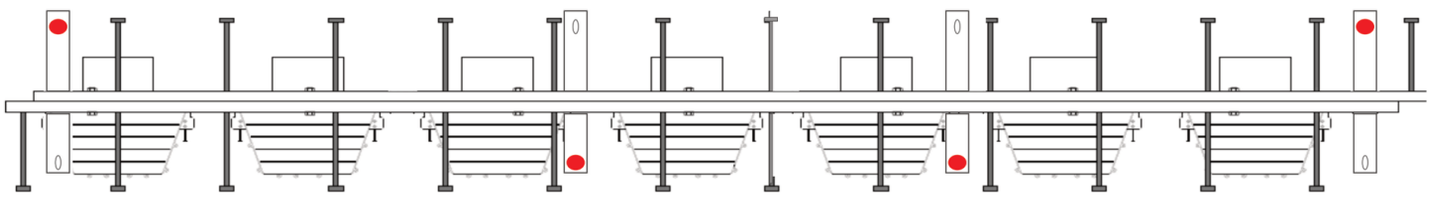

- Red dots mark the bolt locations when pouring both sides of the joint at once.

JOINT CROSS-SECTION

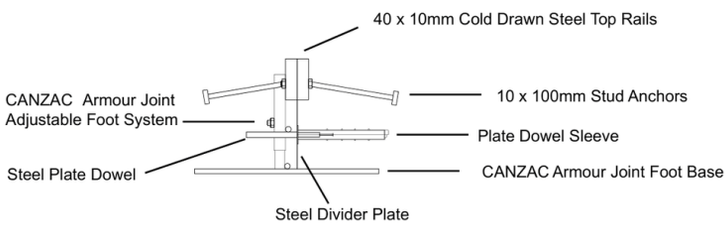

When pinning into the base, drive the fixing pin through the slot towards the outside end of the foot. When masonry-bolting into a site concrete strip, isolate the top of the foot with a smooth plastic shim supplied by CANZAC.

IMPORTANT FIXING NOTE • MONOPOUR (BOTH SIDES AT ONCE)

When fixing to a site concrete strip, stagger the masonry bolts along the joint. At each foot, bolt only on the side **WITHOUT** the welded adjuster. Do not bolt both sides of the same foot.



ARMOUR JOINTS

MONOPOUR / ARMOUR JOINT / TERAJOINT

INSTALLATION INSTRUCTIONS

When pouring one side at a time

Bolt down both sides of each foot before the first pour. Before pouring the adjacent bay, remove the bolts from the side of each foot within that bay.

Seal any penetrations through the DPM

Where a fixing pin penetrates the damp-proof membrane (DPM), seal over the pin and foot with STEGO tape.



FIXING PIN AND FOOT



SEALED WITH STEGO TAPE

FOR SITE SUPPORT 0800 422 692

info@canzac.com

Christchurch 3 Parkhouse Road, Wigram Park 8042 | Auckland 41 Andrew Baxter Drive, Mangere 1061