IRnova

# T2SL
# Oden SL

Introducing the Oden SL, a game-changing SWaP detector that sets a new standard in performance versus size. With its split linear cooler and HOT T2SL MWIR technology, Oden MW SL outshines the competition, offering a tantalizing combination of compactness, silence and longevity. Upgrade to Oden SL today and experience infrared technology at its finest.

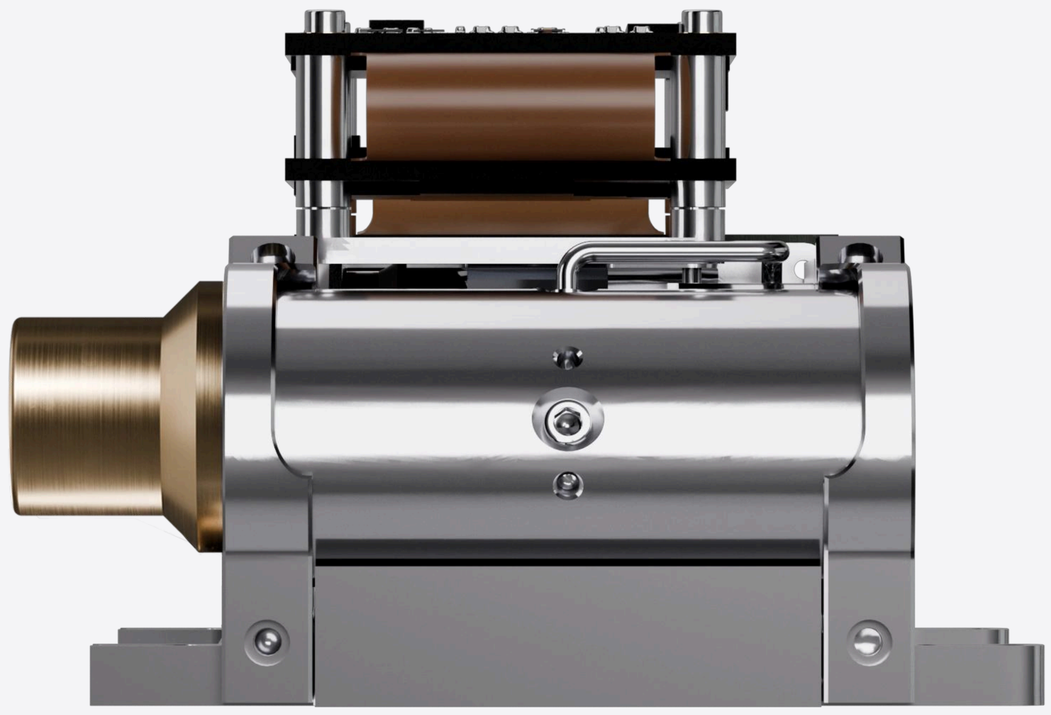

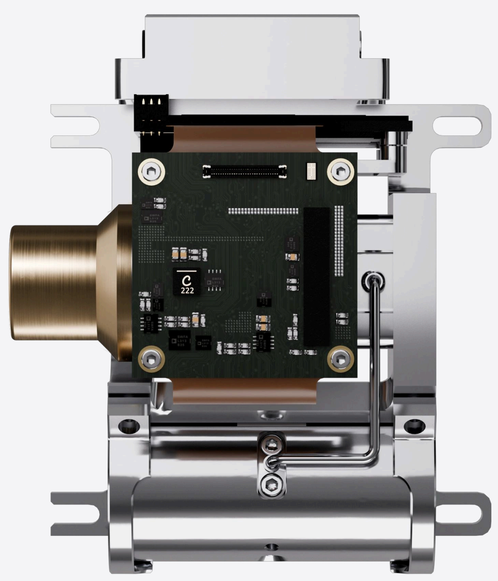

## Description

The Oden SL is a split linear cooler version of the Oden. It features the same groundbreaking HOT T2SL MWIR T2SL performance as the rotary cooler version, but its shorter length along the optical axis makes it the detector of choice for UAV gimbals and other applications where space is constrained. The inherent reliability of the split linear cooler leads to a long lifetime, and the dual opposed compressor enables whisper quiet operation with minimal vibrations, greatly reducing detectability during stealth missions.

## Applications

- Space constrained systems (UAV gimbals, compact multisensor systems)
- Handheld and battery powered systems (goggles, portable cameras)
- Mobile and stationary platforms

 Copyright © IRnova AB 

# General information

**Application:** General purpose

**Format:** 640x512

**Technology:** T2SL

**Pixel pitch:** 15 µm

# Typical detector performance

**Spectral range:** 3.7 - 5.1 µm
CO2 notch filter optional

**Pixel operability:** 99.9 %

**F number options:** F/4, F/5.5

**MTF: 62 %**
@ Nyquist frequency

**NETD:** 18 mK @ F/ 4, 60 Hz

# Proximity electronics

**Supply voltage:** 5 V

**Electrical interfaces:** Camera Link
Cooler control and proximity electronics included

**Maximum frame rate:** 60 Hz
120 Hz optional

# IDDCA Parameters

**Cooler options:** K588, SX020

**Weight:** 340 g

**Power consumption:** 2 W
Without proximity electronics

**Dimensions:** 86x70x52 mm

**Cool down time:** 3.5 min

**Cooler MTTF:** 40 000 h

**Cooler voltage:** 12 V

**Environmental conditions:** MIL-STD-810

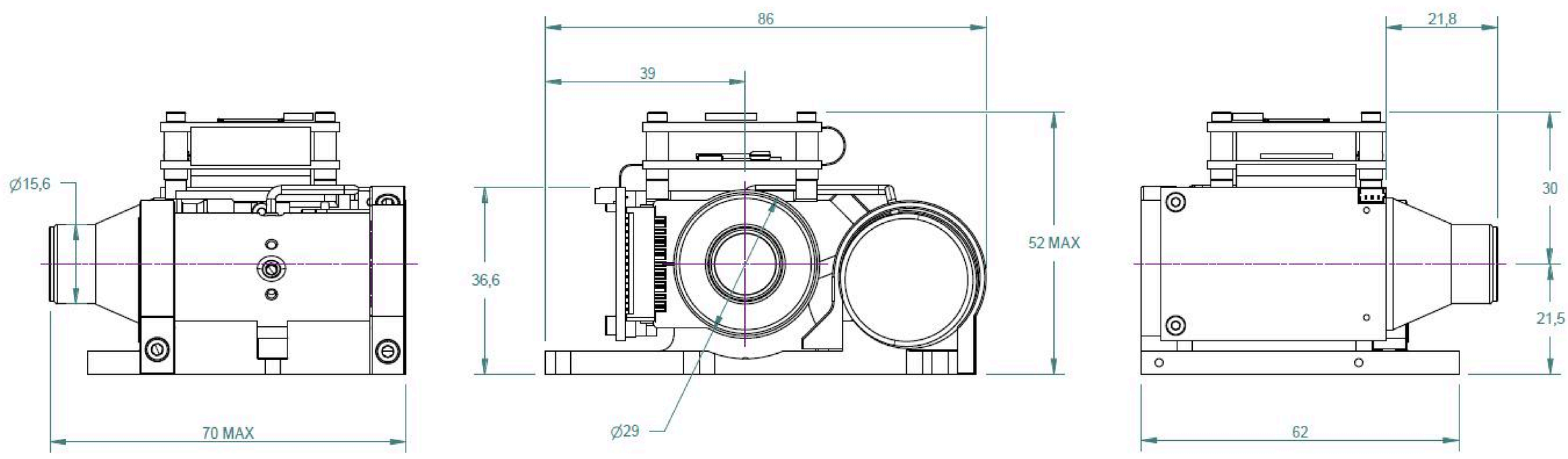


Technical characteristics described above are not contractual and may change without prior notice. This is revision 1.0


Copyright © IRnova AB