IRnova

T2SL
Skade

T2SL Skade is a 1280x1024, 7.5 µm pixel pitch SWaP MWIR detector. Its world-leading T2SL technology enables a compact form factor and low power consumption in both rotary and split linear cooler configurations.

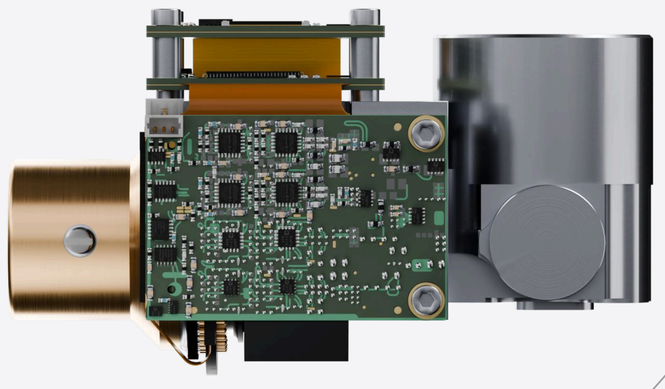

Skade RMs1

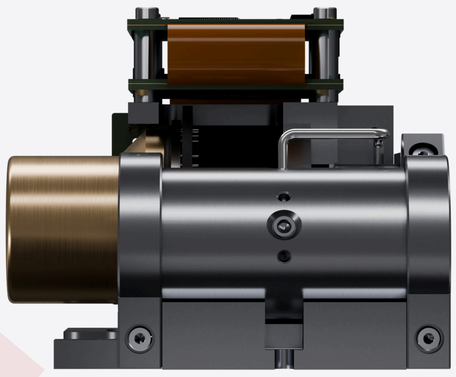

Skade SL K588

PRELIMINARY

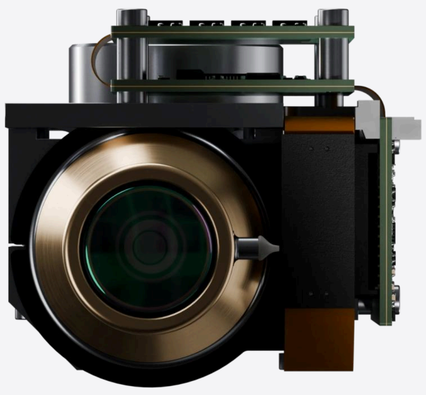

Skade RMs1

Skade SL K588

Description

The Skade is a 1280 × 1024, 7.5 µm pitch T2SL detector designed for demanding MWIR applications. Our groundbreaking T2SL technology combines high resolution, high quantum efficiency across the full 3–5 µm spectral range, low NETD, exceptional array uniformity and operability, all within an outstanding SWaP (Size, Weight and Power) footprint.

Applications

- Long range security & surveillance
- Space constrained systems (UAV gimbals, compact multisensor systems)
- High performance ISR and targeting airborne gimbals
- Handheld and battery powered systems (goggles, portable cameras)
- Mobile and stationary platforms

 Copyright © IRnova AB

General information

Application: General purpose

Format: 1280x1024

Technology: T2SL

Pixel pitch: 7.5 µm

Typical detector performance

Spectral range: 3.7 - 5.1 µm
CO2 notch filter optional

Pixel operability: 99.9 %

F number options: F/2, F/3, F/3.4

MTF: 60 %
@ Nyquist frequency

NETD: 30 mK @ F/3, 60 Hz

Proximity electronics

Supply voltage: 5 V

Maximum frame rate: 60 Hz
120 Hz optional

Electrical interfaces: Camera Link
Cooler control and proximity electronics included

IDDCA Parameters

Cooler options: RMs1, K580, K588, SX020

Weight: 260 g (RMs1)
350 g (K588)

Power consumption: 2 W
Without proximity electronics

Dimensions: 97x58x55 mm (RMs1)
87x72x58 mm (K588)

Cool down time: 4 min

Cooler MTTF: 12 500 h (RMs1)
40 000 h (K588)

Cooler voltage: 12 V

Environmental conditions: MIL-STD-810

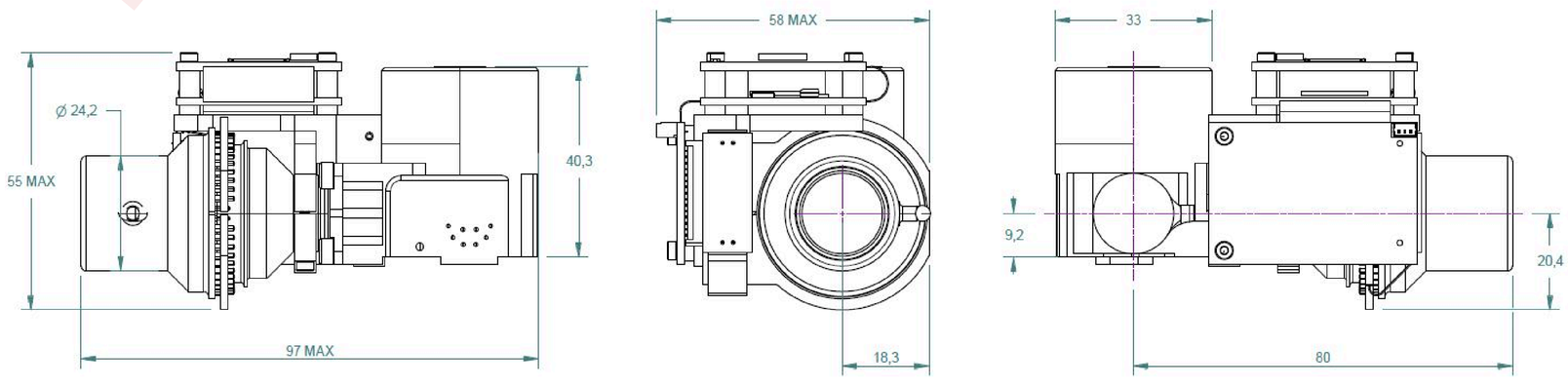

(RMs1)

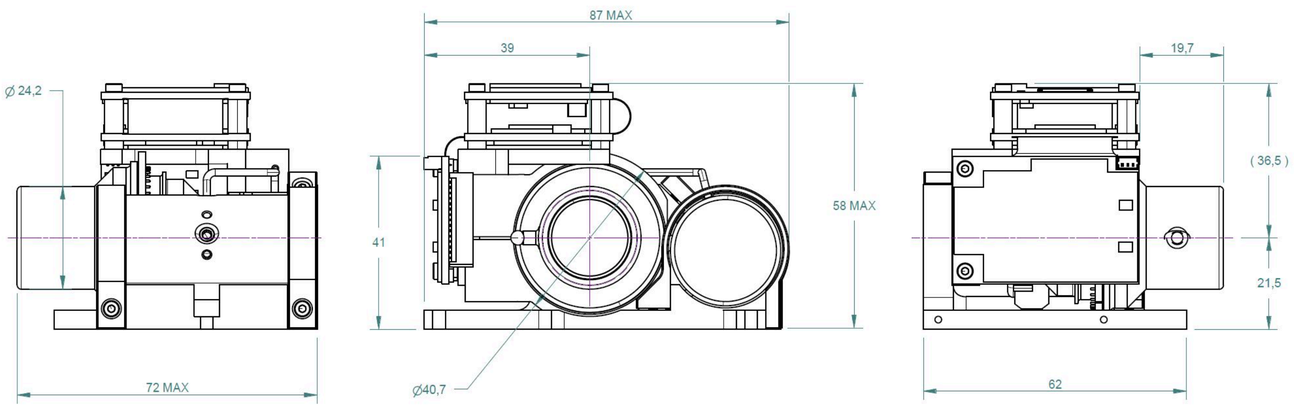

(K588)

Technical characteristics described above are not contractual and may change without prior notice. This is revision 1.0

PRELIMINARY