TECHNICAL DATA SHEET

SKU: EPX-US-175

Geodesic Climbing Dome

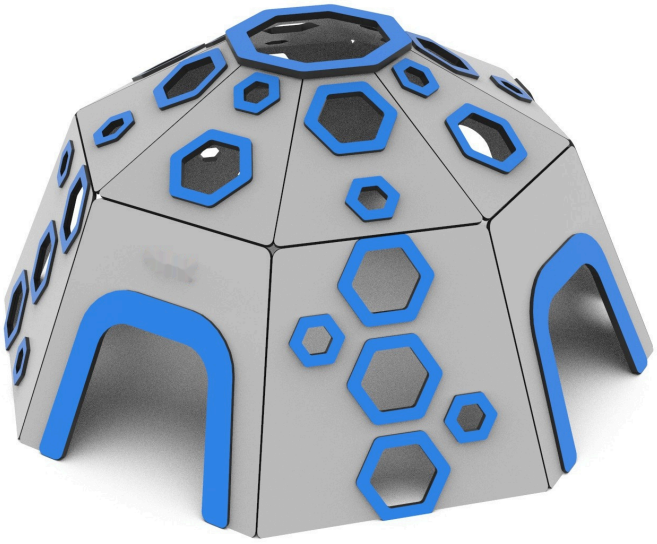

Technical Data

DIMENSIONS	HEIGHT
2.65 x 2.65 m	1.3 m

SAFETY ZONE	FREE-FALL HEIGHT
5.65 x 5.65 m	1.3 m

Conforms to: BS EN 1176-1+A1:2024

Morti Sport & Play

+44 (0)1278 741 110

info@mortisportandplay.co.uk

Morti Sport & Play reserves the right to make changes to its products without notice.

TECHNICAL DATA SHEET
SKU: EPX-US-175

Geodesic Climbing Dome

Materials & Construction

Construction: steel profiles and tubes, zinc-primed, powder-coated	
Climbing surface: coloured HDPE boards	
Holds: durable plastic climbing holds	
Fixings: anti-corrosion treated, plastic-capped bolts	

In accordance with BS EN 1176-1+A1:2024, this product requires impact-absorbing surfacing appropriate to its free-fall height.

The equipment shown is a computer visualisation only; the actual product will look similar. Colours may vary from those shown.
Construction materials can be tailored to the customer's requirements. Dimensional tolerance +/- 5cm.

Additional Views

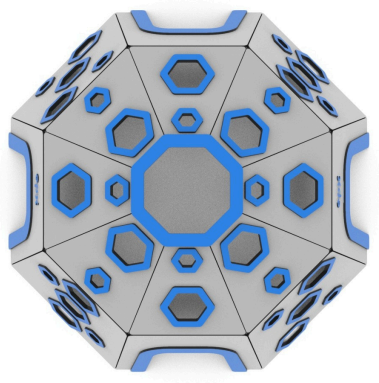

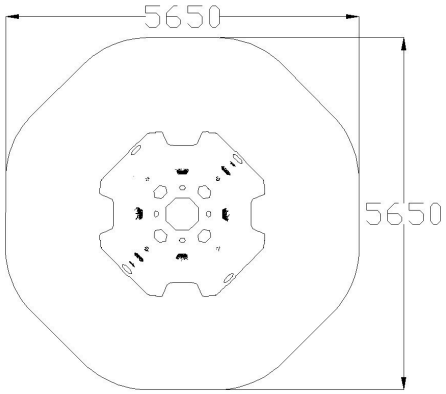

Why Choose This Product

A low, dome-shaped 'igloo' climber with hexagonal holes to clamber over and through — inclusive, low-height fun that works well for younger children.

- Rounded geodesic dome with climb-over and climb-through holes
- Low 1.3 m height suited to younger and mixed-age play areas
- Certified to BS EN 1176-1+A1:2024 for public playground safety