# Robinia Climbing Posts with Holds

Four upright Robinia posts with HPL climbing holds



## Functions

- Climbing
- Gripping
- Route finding
- Upper-body strength
- Coordination
- Confidence

## Technical Data

DIMENSIONS (L x W)

**2.06 x 1.16 m**

HEIGHT

**2.38 m**

SAFETY ZONE

**5.19 x 5.02 m (21.3 m²)**

FREE-FALL HEIGHT

**2.38 m**

Capacity: 6 users  Recommended age: 5+ years

**Conforms to: BS EN 1176-1:2017+A1:2023**

### Safety Zone Plan

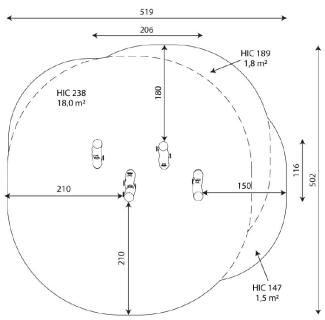


*Plan view showing the safety zone outline; dimensions in cm, not to scale.*


+44 (0)1278 741 110
info@mortisportandplay.co.uk
Morti Sport & Play reserves the right to make changes to its products without notice.

# Robinia Climbing Posts with Holds

## Materials & Construction

**Posts:** Four Robinia hardwood posts, about Ø18 cm, of different heights, with no sharp edges

**Climbing holds:** Weather-resistant HPL climbing stones with stainless steel fittings

**Fixings:** Stainless steel screws

**Foundations:** Posts anchored 1.0 m deep

**With a free-fall height of 2.38 m, impact-absorbing surfacing to EN 1177 is required across the 21.3 m² safety zone (loose fill at least 400 mm deep). We'll recommend the right finish for your site.**

*Images are computer visualisations; the installed product will look similar. Colours may vary from those shown.*

## How to Use

### Climbing posts

Children climb the posts using the holds as hand and footholds, choosing a post and route to suit their confidence.

**Benefits:**

Builds grip, upper-body strength, coordination and confidence at height.

## Inspection & Maintenance

Routine visual check weekly (daily on busy or vandal-prone sites), an operational check every 1–3 months and a main inspection once a year. Check the climbing holds and their fixings for tightness and wear, and the timber for splits around fixings. Replace worn or damaged parts promptly with genuine spares. Morti Sport & Play offers annual inspection and maintenance for school and public sites.

## Why Choose This Product

A set of four Robinia climbing posts of different heights, fitted with HPL climbing holds. Children pick their own post and route, and up to six can climb at once. Certified to BS EN 1176-1:2017+A1:2023 and recommended from age 5.

- Four posts of different heights for graded challenge
- Up to six users at once, from age 5
- Certified to BS EN 1176-1:2017+A1:2023
- Designed, supplied and installed by Morti Sport & Play's own teams


+44 (0)1278 741 110
info@mortisportandplay.co.uk
Morti Sport & Play reserves the right to make changes to its products without notice.