Dr. Thiedig

Sampling & Analysing Systems

Made in Germany

ANALYSER

Digox 602 *silica*



The determination of dissolved silicic acid (ortho-silicate) in the water-steam cycle is of great importance for the operation and plant safety in power plants. In addition to the determination of ortho-silicate in the live steam in order to avoid deposits or crystallisation inside the turbine, it is possible to detect an aperture in the anion exchanger or mixed bed ion exchanger.

The **Digox 602 *silica*** is constantly being developed and is in accordance with the physical-chemical measuring method of the new VGB guidelines S-006 for the quantitative detection of dissolved silicic acid.
A photometric procedure with a detection limit of 0.1 ppb is used which is ideally suited for the determination of silicic acid in ultra pure power plant water.

The fluidics to the analyser of silicic acid **Digox 602 *silica*** is illustrated below:

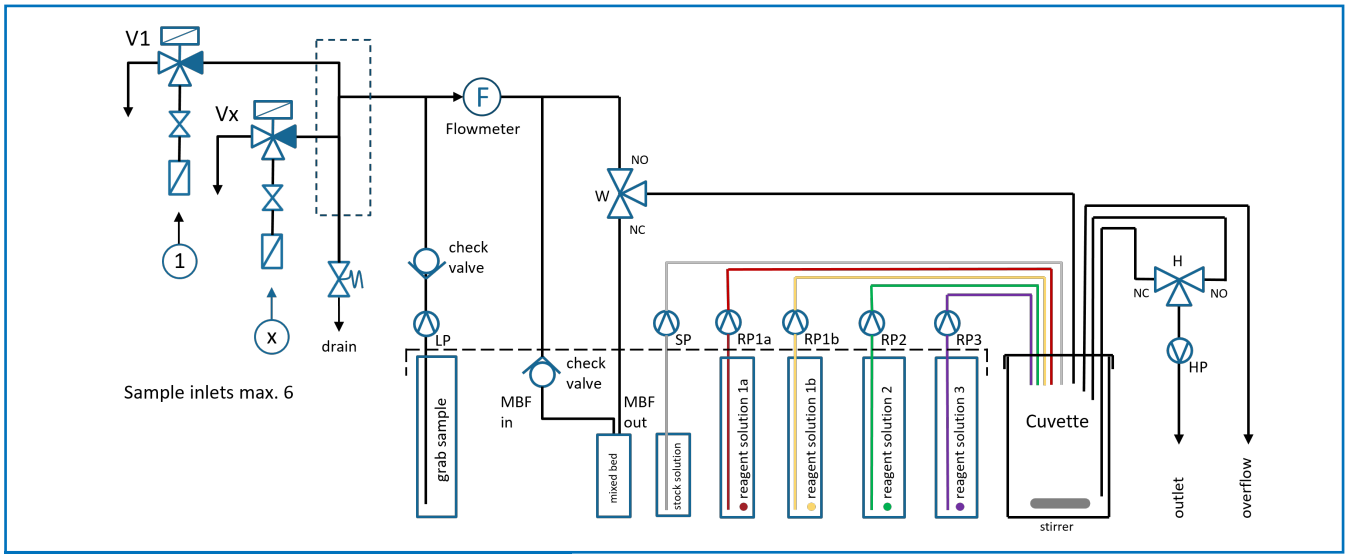

Technical features

- **Very low reagent consumption, one reagent set (approx. 6 liters) lasts for at least 3760 measurings or more than 1 month at the highest measurement frequency; the calibration solution lasts for 6 months***
- **Automatic re-calibration, adjustable measuring interval**
- **Individually selectable sequence and measuring frequency for each channel. Time frame can be adjusted from the minimum measurement time up to a measuring interval of 96 hours**
- **Short measuring sequence < 15 min. (at sample temperature of 25 – 50°C)**
- **Maintenance-free, high-precision micro-dosing pumps for chemicals and stock solution**
- **Real blank value determination of chemicals when determining the zero point**
- **Highly accurate temperature control of the sample**
- **3/2-way valve per channel for better pre-rinsing of the sample during the waiting time**
- **An efficient, easily replaceable particle filter for each channel to prevent contamination inside the device**
- **Built-in sequencer for up to 6 sample channels with an overflow control valve for pressure stabilisation**
- **Additional measurement of a grab sample in a bottle**
- **Profibus DP Interface (option)**
- **Remote control by means of 6 external binary contacts possible (calibration commands, channel selection, channel hide, grab sample)**

*** at recommended calibration every 48 hours**

TECHNICAL DATA

Device	**Digox 602 *silica***
Measuring range	0.1 – 5000 ppb SiO_2
Photometer	Precision photometer with temperature control of the sample
Display	Graphic display, measuring value for each channel with point in time and operating condition
Accuracy	Max. {± 2% of reading or ± 2 ppb} within measuring range 0 – 500 ppb ± 5% of reading within measuring range > 500 ppb
Determination limit	0.1 ppb
Repeatability	Max. {± 1% of reading or ± 0.5 ppb} within measuring range 0 – 500 ppb ± 2% of reading within measuring range > 500 ppb
Calibration	Three-point calibration using micro-dosing pumps (true zero point including all reagents, standards 500 ppb and 2000 ppb SiO_2)
Reagents	2 x 2.0 l and 2 x 1.0 l reagents, 0.25 l stock solution
Data interface	Profibus DP (optional)
Binary inputs	6x binary inputs for external (dry) contacts to hide channels and for remote control
Relay outputs	Two relays (1x for warnings and 1x for alarms), 250 VAC/3 A, max. 24 VDC/3 A, 6 relays for signalling of the channel activity 24 VDC/3 A
Operation	Password protection for two levels, entry of threshold values, communication parameters and measuring cycles
Analog outputs	Up to 6 analog outputs 4…20 mA ±<0.025 mA, max. load resistance 500 Ω; max. 2 analogue outputs if Profibus interface is installed
Duration of analysis	Max. 15 min. at a sample temperature of 25 – 50°C
Ambient temperature	10 – 50°C, storage and transport 0 – 50°C, relative humidity 10 – 95%, non-condensing
Sample conditioning	5 – 50°C, 6 – 15 l/h, 0.8 – 5.0 bar, min. 0.4 bar
Sample connections	1–6 input channels with overflow valve, additional grab sample
Power supply	100 – 240 VAC 50/60Hz, < 75 VA, battery-free parameter storage, no data loss after power failure, data is stored in a memory; Option 24 Volt version: 23.75 – 24.25 VDC
Standard conformity	CE and CB-compliant according to EN 61010-1, EN 61326 -1 and -2 -3, EN 50581
Protective system	IP 65
Weight	Max. 38 kg (6 channel device including all consumables)
Dimensions	850 x 450 x 310 mm (HxWxD)

Subject to technical alterations.

Dr. Thiedig

Sampling & Analysing Systems

Dr. Thiedig GmbH & Co KG
Prinzenallee 78-79
13357 Berlin | Germany

Phone +49(0)30/497769-0
Fax +49(0)30/497769-25

info@thiedig.com
www.thiedig.com

11/2026