Dr. Thiedig

Sampling & Analysing Systems

Made in Germany

ANALYSER

Digox 602 *phosphate*



While developing the phosphate analyser, we focused on longevity and robustness. The analyser employs the well-known vanadate method. A key feature is the on-board blank determination of the reagents used via a built-in mixed bed ion exchanger resin. All pumps of the analyser are designed for a long service life, there are no hose changes or similar maintenance required. The analyser is designed for measuring up to 6 channels. It performs automatic calibration and works in batch operation. Therefore, longer measuring breaks are no issue.

The **Digox 602 *phosphate*** measures water dissolved ortho-phosphate in the range of 0.05–60 ppm. Therefore, it can be used in a variety of applications, such as in water-steam cycles, conventional and nuclear energy generators, in chemistry and in petrochemistry.

The fluidics of the phosphate analyser **Digox 602 *phosphate*** is illustrated below:

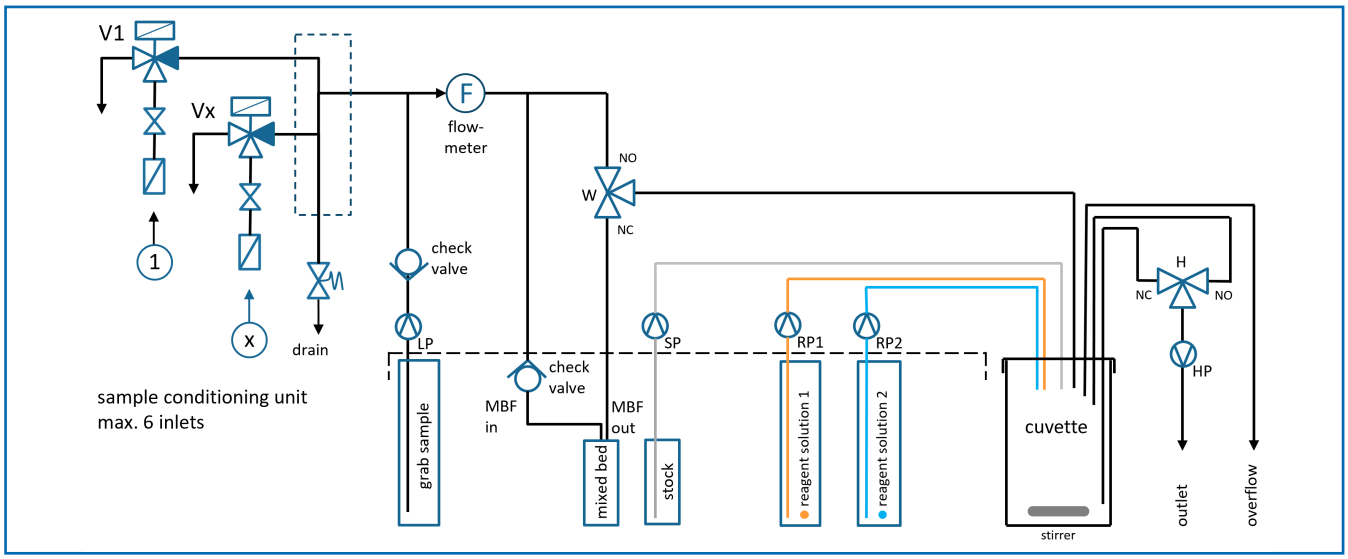

Technical features

- **Very low reagent consumption, one reagent set (approx. 4 liters) lasts for up to 4700 measurings or over one month at the highest measurement frequency; the calibration solution lasts for 6 months***
- **Automatic re-calibration, adjustable measuring interval**
- **Individually selectable sequence and measuring frequency for each channel. Time frame can be adjusted from the minimum measurement time up to a measuring interval of 96 hours**
- **Short measuring sequence < 10 min. (at sample temperature of 25 – 50°C)**
- **Maintenance-free, high-precision micro-dosing pumps for chemicals and stock solution**
- **Real blank value determination of chemicals when determining the zero point**
- **Highly accurate temperature control of the sample**
- **3/2-way valve per channel for better pre-rinsing of the sample during the waiting time**
- **Efficient, easily replaceable particle filter per channel to avoid contamination in the device**
- **Built-in sequencer for up to 6 sample channels with overflow regulator for pressure stabilization**
- **Additional measurement of a grab sample in a bottle**
- **Profibus DP Interface (optional)**
- **Remote control by means of 6 external binary contacts possible (calibration commands, channel selection, channel hide, grab sample)**

*** at recommended calibration every 48 hours**

TECHNICAL DATA

Device	**Digox 602 *phosphate***
Measuring range	0.05 – 60 ppm (mg/l) PO_4^{3-}
Photometer	Precision photometer with temperature control of the sample
Display	Graphic display, measuring value for each channel with point in time and operating condition
Accuracy	Max. {± 2% of reading or ± 0.05 ppm} within measuring range 0.05 – 10 ppm ± 5% of reading within measuring range > 10 – 60 ppm
Determination limit	0.05 ppm
Repeatability	Max. ± 2% of reading or ± 0.05 ppm
Calibration	Three-point calibration is realised using micro dosing pumps (true zero point including all reagents, standards 10 ppm and 50 ppm PO_4^{3-})
Reagents	2 x 2.0 l reagents, 0.25 l stock solution
Data interface	Profibus DP (optional)
Binary inputs	6x binary inputs for external (dry) contacts to hide channels and for remote control
Relay outputs	Two relays (1x for warnings and 1x for alarms), 250 V AC/3 A, max. 24 V DC/3 A, 6 relays outputs for signalling of the channel activity, max. 24 V DC/3 A
Operation	Password protection for two levels, entry of threshold values, communication parameters and measuring cycles
Analog outputs	Up to 6 analog outputs 4…20 mA ± < 0.025 mA, max. load resistance 500 Ω; max. 2 analogue outputs if Profibus interface is installed
Duration of analysis	Max. 10 min. at a sample temperature of 25 – 50°C
Ambient temperature	10 – 50°C, storage and transport 0 – 50°C, relative humidity 10 – 95%, non-condensing
Sample conditioning	5 – 50 °C, 6 – 15 l/h, 0.8 – 5.0 bar, min. 0.4 bar
Sample connections	1– 6 input channels with overflow valve, additional grab sample
Power supply	100 – 240 VAC 50/60Hz, < 75 VA, battery-free parameter storage, no data loss after power failure, data is stored in a memory; Option 24 Volt version: 23.75 – 24.25 VDC
Standard conformity	CE and CB-compliant according to EN 61010-1, EN 61326 -1 and -2 -3, EN 50581
Protective system	IP 65
Weight	Max. 36 kg (6 channel device including all consumables)
Dimensions	850 x 450 x 310 mm (HxWxD)

Subject to technical alterations.

Dr. Thiedig

Sampling & Analysing Systems

Dr. Thiedig GmbH & Co KG
Prinzenallee 78-79
13357 Berlin | Germany

Phone +49(0)30/497769-0
Fax +49(0)30/497769-25

info@thiedig.com
www.thiedig.com

11/2026