Barrett Homes

Welcome to the *whānau*.

CONTENTS:

	COVER SHEET
1	ELEVATIONS
2	ELEVATIONS
3	SITE PLAN
4	LANDSCAPING PLAN
5	CONCEPT PLAN
6	KITCHEN & BATHROOM
7	CROSS SECTIONS
8	JOINERY SCHEDULE

NEW DWELLING FOR:
BARRETT HOMES (NORTHLAND) LTD

ADDRESS:
LOT 13, 28 MOORING WAY
ONE TREE POINT, WHANGAREI

Y:¥GM Projects¥NORTHLAND¥Marsden Cove (One Tree Point)¥The Mooring¥MOOR13¥Concept Plans¥1.1¥MOOR13.pln

ALL PLANS ARE COPYRIGHT TO BARRETT HOMES Ltd. All rights reserved.
No part of this work covered by copyright may be reproduced or copied without written permission.

Barrett Homes

Project No:	MOOR13	Designed:	NS	Wind:	HIGH	Drawing:	COVER SHEET	Date:	14/05/2026
Plan:	New Design	Drawn:	-	EQ:	1	Client Name:	BARRETT HOMES (NORTHLAND) LTD	Rev:	
Version:	1.1	Checked:	KB	Exposure:	D	Site Address:	LOT 13, 28 MOORING WAY	Sheet:	
		design@barretthomes.co.nz		Council:	WDC		ONE TREE POINT, WHANGAREI	Scale:	

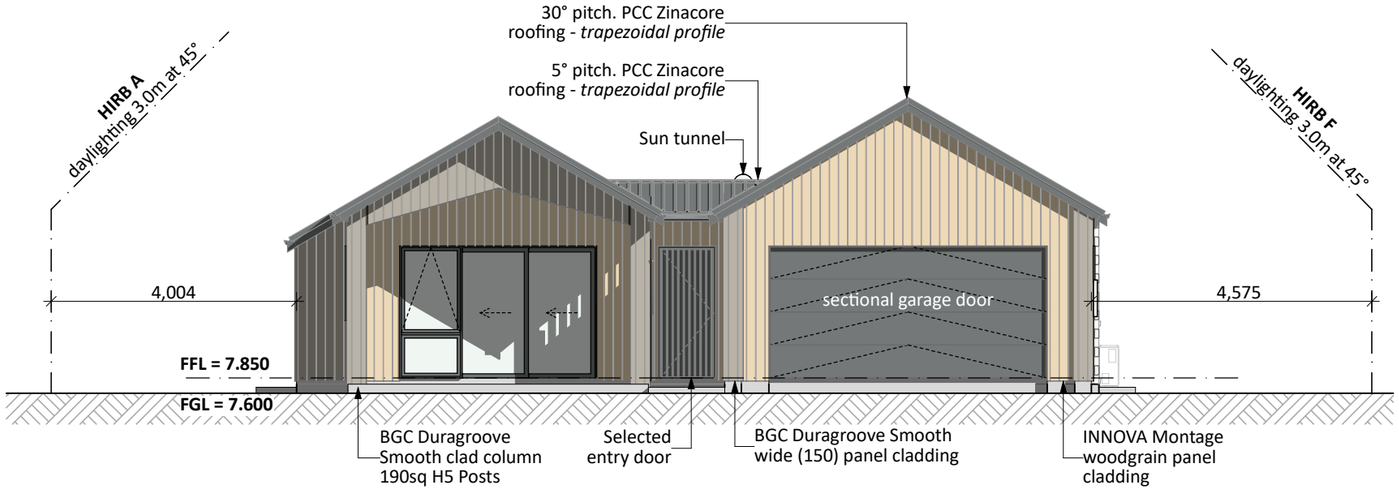

NORTH ELEVATION

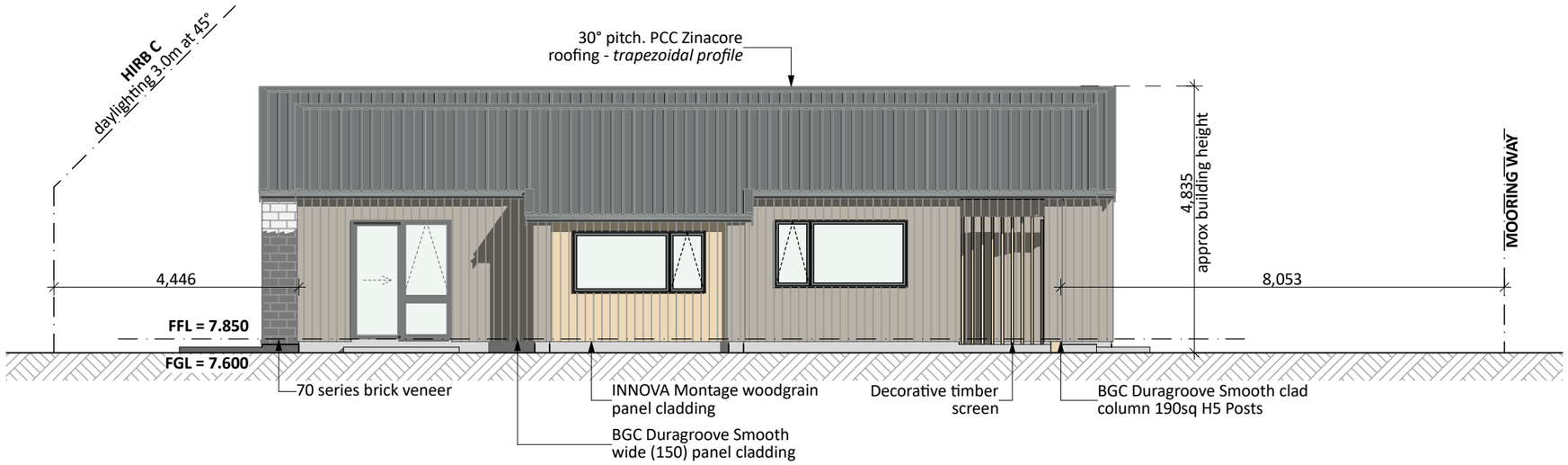

EAST ELEVATION

General Notes:

Any encroachments shown are to be confirmed by a registered surveyor prior to commencement of foundations. No liability shall be held by designer with this confirmation.

NZBC D1/AS1 Access
Minimum slip resistance to steps and landings
Concrete or H5 timber step to all access points, min. 150mm below finished floor level

Foundation:

Raft floor to engineers design (see plan notes and details)

Wall Cladding:

INNOVA Montage woodgrain panel cladding
BGC Duragroove Smooth wide (150) panel cladding
70 series brick veneer - ensure cavity and weep holes are free from excess mortar

Roof Cladding:

30° & 5° pitch. PCC Zinacore roofing - *Trapezoidal profile*

Fascia and Spouting:

COLORCOTE fascia, spouting & 80mm Ø MARLEY PVC downpipes

Joinery:

Selected powder coated aluminium joinery with thermally improved Low E double glazing

PRELIMINARY ONLY.
Elevations are subject to the following:
- Site Levels

CONCEPT PLAN APPROVAL (confirmation to consent drawings)
Signature *Date*

CONCEPT ONLY
MINOR VARIATIONS TO THE PLANS MAY BE NECESSARY DURING WORKING DRAWINGS DUE TO BRACING REQUIREMENTS, ENGINEERING AND UNFORSEEN SITE CONDITIONS

Barrett Homes

Project No:	MOOR13	Designed:	NS	Wind:	HIGH	Drawing:	ELEVATIONS	Date:	14/05/2026
Plan:	New Design	Drawn:	-	EQ:	1	Client Name:	BARRETT HOMES (NORTHLAND) LTD	Rev:	
Version:	1.1	Checked:	KB	Exposure:	D	Site Address:	LOT 13, 28 MOORING WAY	Sheet:	1
			design@barretthomes.co.nz	Council:	WDC		ONE TREE POINT, WHANGAREI	Scale:	1:100

Y:¥GM Projects¥NORTHLAND¥Marsden Cove (One Tree Point)¥The Mooring¥MOOR13¥Concept Plans¥1.1¥MOOR13.pln

ALL PLANS ARE COPYRIGHT TO BARRETT HOMES Ltd. All rights reserved.
No part of this work covered by copyright may be reproduced or copied without written permission.

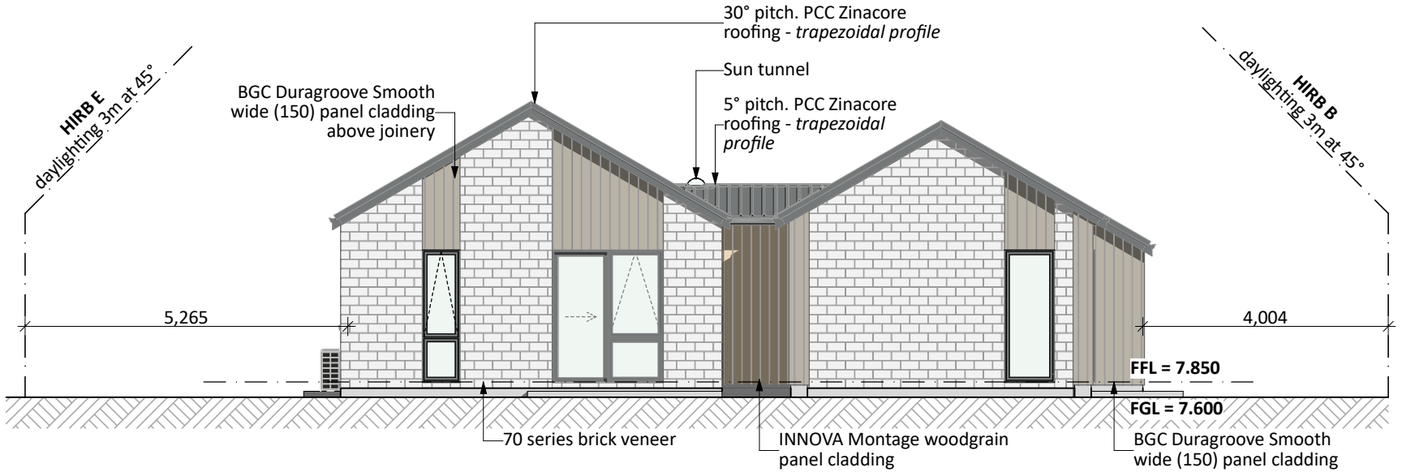

SOUTH ELEVATION

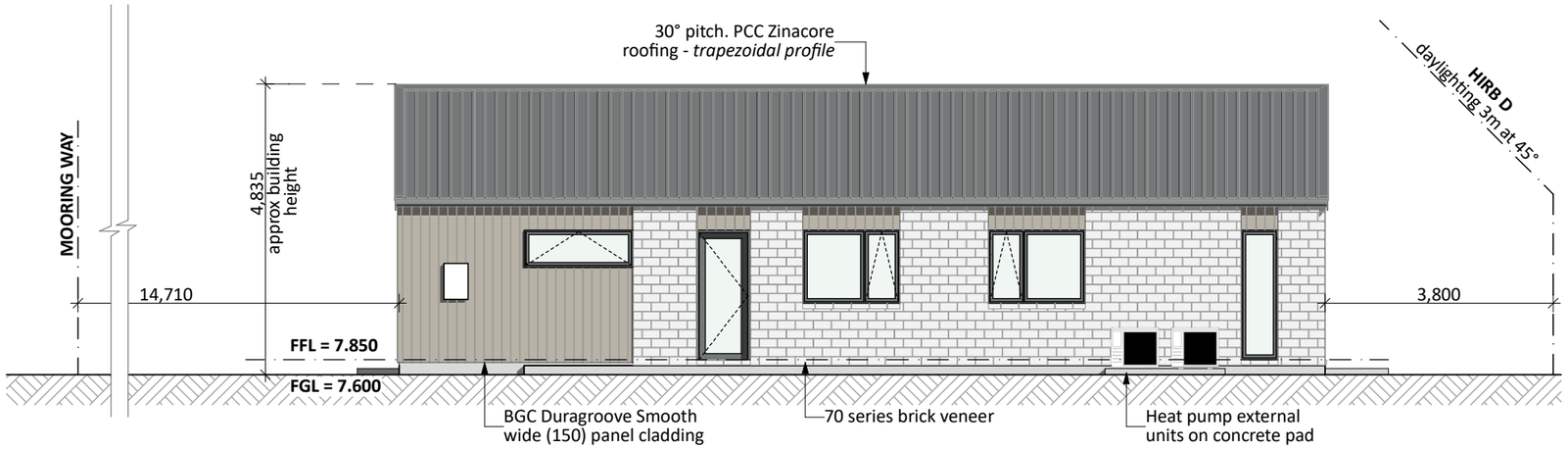

WEST ELEVATION

General Notes:

Any encroachments shown are to be confirmed by a registered surveyor prior to commencement of foundations. No liability shall be held by designer with this confirmation.

NZBC D1/AS1 Access
Minimum slip resistance to steps and landings
Concrete or H5 timber step to all access points, min. 150mm below finished floor level

Foundation:

Raft floor to engineers design (see plan notes and details)

Wall Cladding:

INNOVA Montage woodgrain panel cladding
BGC Duragroove Smooth wide (150) panel cladding
70 series brick veneer - ensure cavity and weep holes are free from excess mortar

Roof Cladding:

30° & 5° pitch. PCC Zinacore roofing - *Trapezoidal profile*

Fascia and Spouting:

COLORCOTE fascia, spouting & 80mm Ø MARLEY PVC downpipes

Joinery:

Selected powder coated aluminium joinery with thermally improved Low E double glazing

PRELIMINARY ONLY.
Elevations are subject to the following:
- Site Levels

CONCEPT PLAN APPROVAL (confirmation to consent drawings)
Signature *Date*

CONCEPT ONLY
MINOR VARIATIONS TO THE PLANS MAY BE NECESSARY DURING WORKING DRAWINGS DUE TO BRACING REQUIREMENTS, ENGINEERING AND UNFORSEEN SITE CONDITIONS

Y:¥GM Projects¥NORTHLAND¥Marsden Cove (One Tree Point)¥The Mooring¥MOOR13¥Concept Plans¥1.1¥MOOR13.pln

ALL PLANS ARE COPYRIGHT TO BARRETT HOMES Ltd. All rights reserved.
No part of this work covered by copyright may be reproduced or copied without written permission.

Barrett Homes

Project No:	MOOR13	Designed:	NS	Wind:	HIGH	Drawing:	ELEVATIONS	Date: 14/05/2026
Plan:	New Design	Drawn:	-	EQ:	1	Client Name:	BARRETT HOMES (NORTHLAND) LTD	Rev:
Version:	1.1	Checked:	KB	Exposure:	D	Site Address:	LOT 13, 28 MOORING WAY	Sheet: 2
			design@barretthomes.co.nz	Council:	WDC		ONE TREE POINT, WHANGAREI	Scale: 1:100

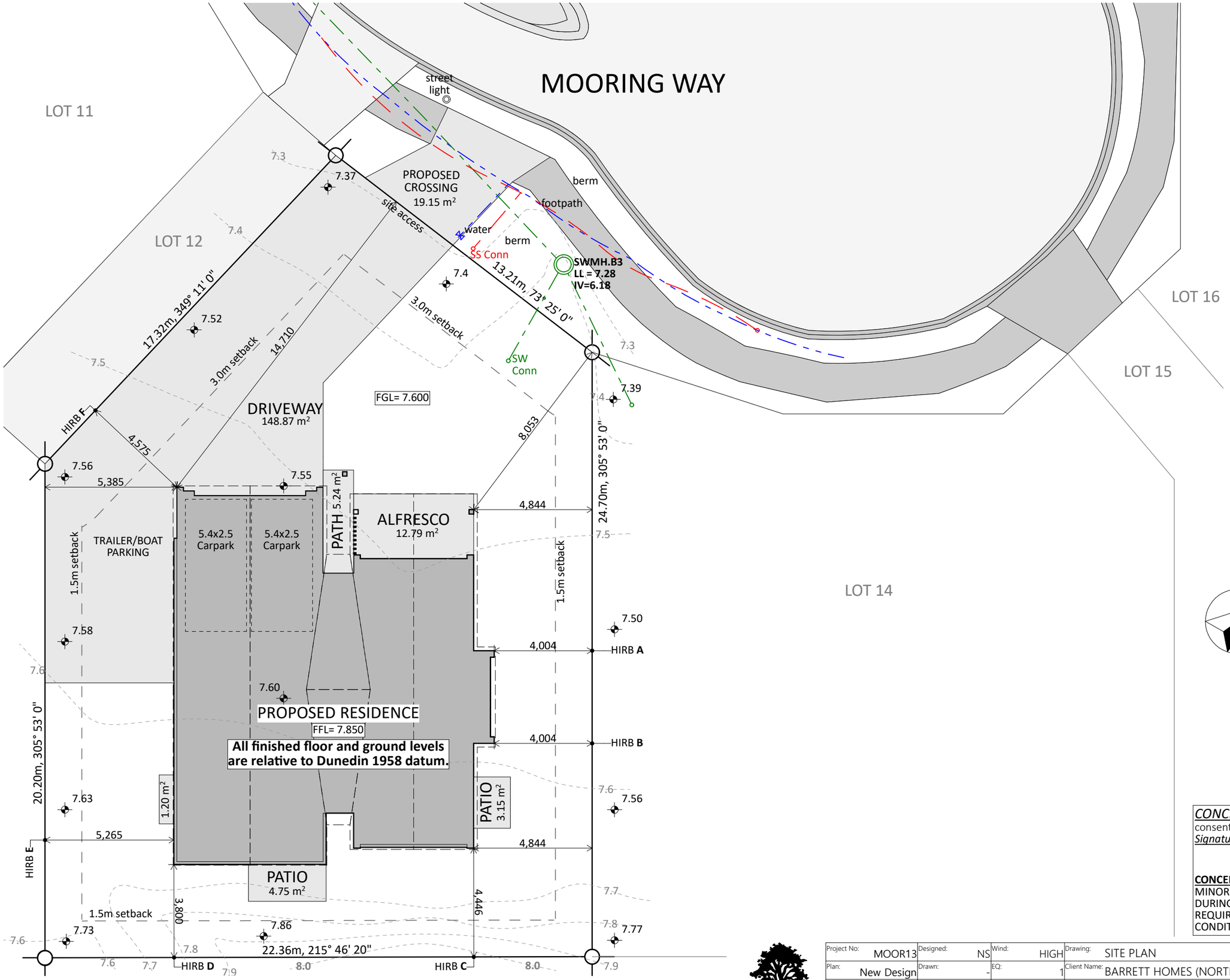

Site Info:

LOT: 13
DP: 599307
AREA: 616m²

Site Coverage:

165m² *(House area)* **+ 9.62m²** *(eaves over 800mm)* **/ 616m²** *(site area)* **= 28.4%**
Living Zone = GRZ
Max coverage = 40%
(GRZ-R8 - 40% of net site area)

Impervious areas:
263.45m² *(Impervious area)* **/ 616m²** *(site area)* **= 55.2%**
Max Impervious area = 60%
(GRZ-R7 - 60% of net site area)

CONCEPT PLAN APPROVAL (confirmation to consent drawings)
Signature *Date*

CONCEPT ONLY
MINOR VARIATIONS TO THE PLANS MAY BE NECESSARY DURING WORKING DRAWINGS DUE TO BRACING REQUIREMENTS, ENGINEERING AND UNFORSEEN SITE CONDITIONS

Barrett Homes

Project No: MOOR13	Designed: NS	Wind: HIGH	Drawing: SITE PLAN	Date: 14/05/2026
Plan: New Design	Drawn: -	EQ: 1	Client Name: BARRETT HOMES (NORTHLAND) LTD	Rev:
Version: 1.1	Checked: KB	Exposure: D	Site Address: LOT 13, 28 MOORING WAY	Sheet: 3
design@barretthomes.co.nz		Council: WDC	ONE TREE POINT, WHANGAREI	Scale: 1:150

Y:¥GM Projects¥NORTHLAND¥Marsden Cove (One Tree Point)¥The Mooring¥MOOR13¥Concept Plans¥1.1¥MOOR13.pln

ALL PLANS ARE COPYRIGHT TO BARRETT HOMES Ltd. All rights reserved.
No part of this work covered by copyright may be reproduced or copied without written permission.

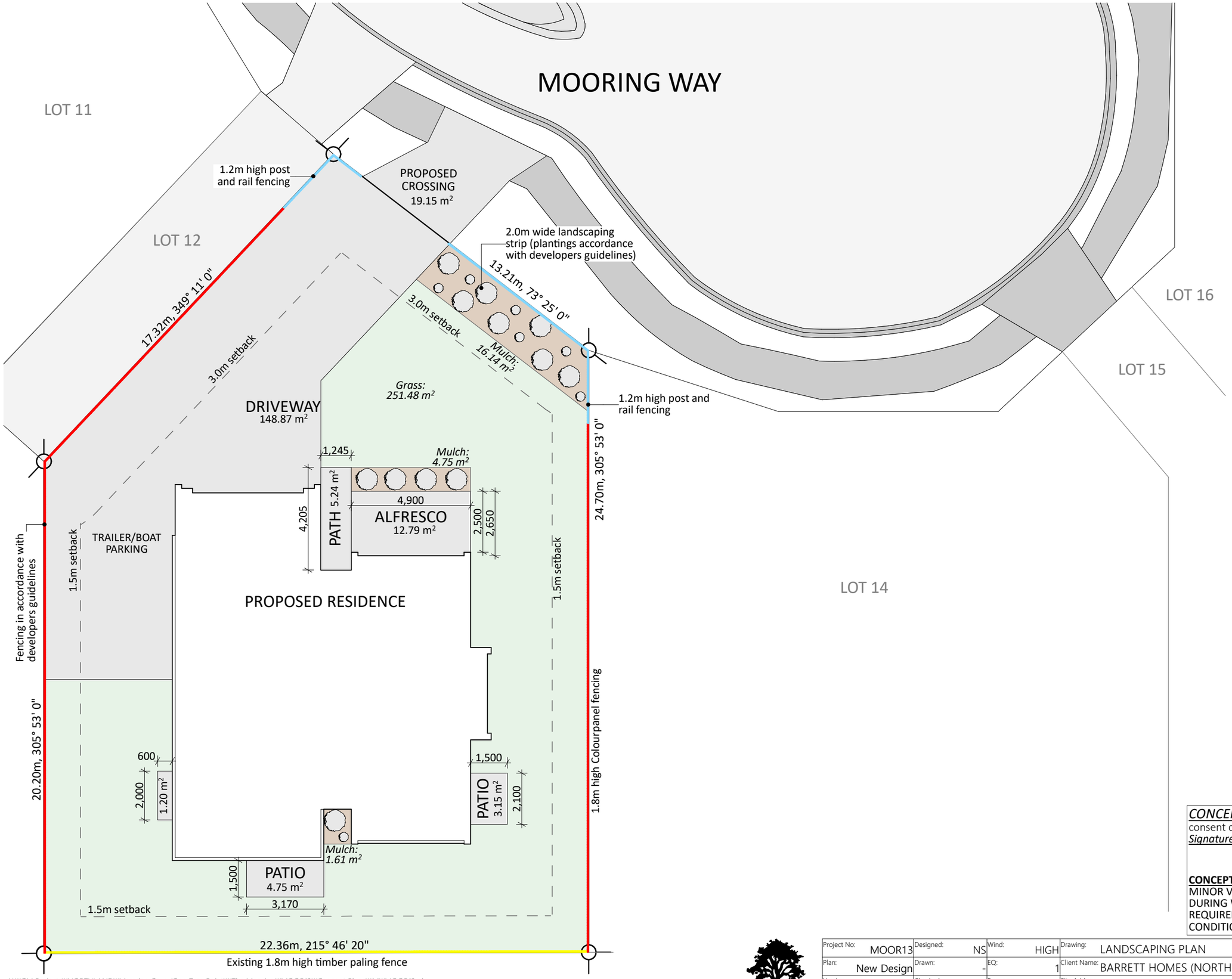

Landscape Key:

- Grass
- Mulch with Plantings
- 1.8m Colourpanel Fencing
- 1.2m Post & Rail Fencing
- 1.8m Existing Timber Paling Fencing
- Selected Grass Plantings

CONCEPT PLAN APPROVAL (confirmation to consent drawings)

Signature *Date*

CONCEPT ONLY

MINOR VARIATIONS TO THE PLANS MAY BE NECESSARY DURING WORKING DRAWINGS DUE TO BRACING REQUIREMENTS, ENGINEERING AND UNFORSEEN SITE CONDITIONS

Barrett Homes

Project No:	MOOR13	Designed:	NS	Wind:	HIGH	Drawing:	LANDSCAPING PLAN	Date: 14/05/2026
Plan:	New Design	Drawn:	-	EQ:	1	Client Name:	BARRETT HOMES (NORTHLAND) LTD	Rev:
Version:	1.1	Checked:	KB	Exposure:	D	Site Address:	LOT 13, 28 MOORING WAY	Sheet: 4
			design@barretthomes.co.nz	Council:	WDC		ONE TREE POINT, WHANGAREI	Scale: 1:150

Y:\GM Projects\NORTHLAND\Marsden Cove (One Tree Point)\The Mooring\MOOR13\Concept Plans\1.1\MOOR13.pln

ALL PLANS ARE COPYRIGHT TO BARRETT HOMES Ltd. All rights reserved.
No part of this work covered by copyright may be reproduced or copied without written permission.

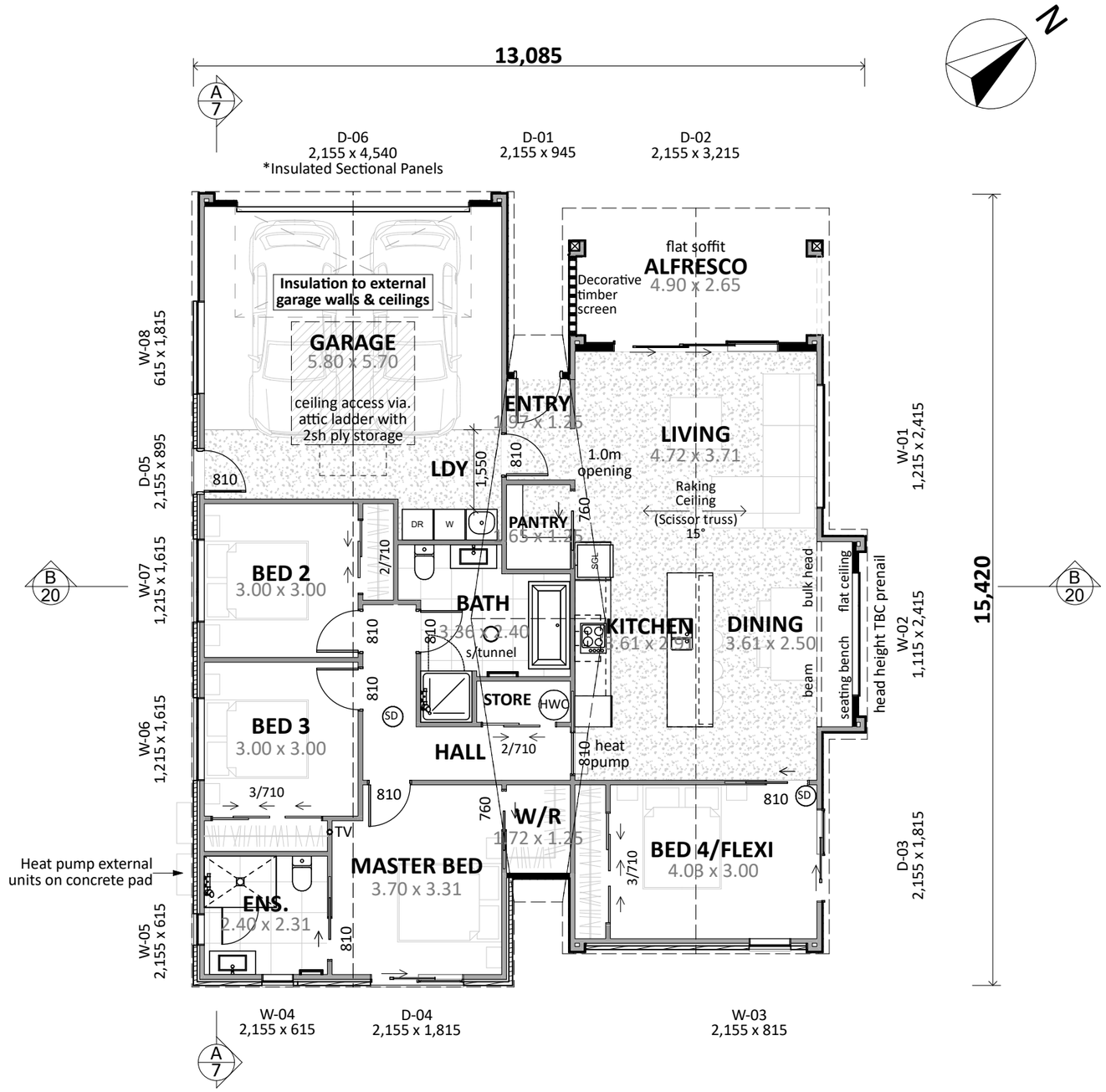

Plan Notes:
2.425 Stud height throughout
Full height joinery 2155 head height
Raking ceiling over KITCHEN/DINING/LIVING (scissor truss)
Raking soffit to Alfresco (scissor truss)

Floor Area:

Area o/frame: 162.12 m²
Area o/foundation: 165.22 m²

Cladding Key:

- **INNOVA Montage**
- **BGC Duragroove**
- **Brick Veneer**

CONCEPT PLAN APPROVAL (confirmation to consent drawings)
Signature *Date*

CONCEPT ONLY
MINOR VARIATIONS TO THE PLANS MAY BE NECESSARY DURING WORKING DRAWINGS DUE TO BRACING REQUIREMENTS, ENGINEERING AND UNFORSEEN SITE CONDITIONS

Barrett Homes

Project No:	MOOR13	Designed:	NS	Wind:	HIGH	Drawing: CONCEPT PLAN	Date: 14/05/2026
Plan:	New Design	Drawn:	-	EQ:	1	Client Name: BARRETT HOMES (NORTHLAND) LTD	Rev:
Version:	1.1	Checked:	KB	Exposure:	D	Site Address: LOT 13, 28 MOORING WAY	Sheet: 5
			design@barretthomes.co.nz	Council:	WDC	ONE TREE POINT, WHANGAREI	Scale: 1:100, 1:50

Y:¥GM Projects¥NORTHLAND¥Marsden Cove (One Tree Point)¥The Mooring¥MOOR13¥Concept Plans¥1.1¥MOOR13.pln

ALL PLANS ARE COPYRIGHT TO BARRETT HOMES Ltd. All rights reserved.
No part of this work covered by copyright may be reproduced or copied without written permission.

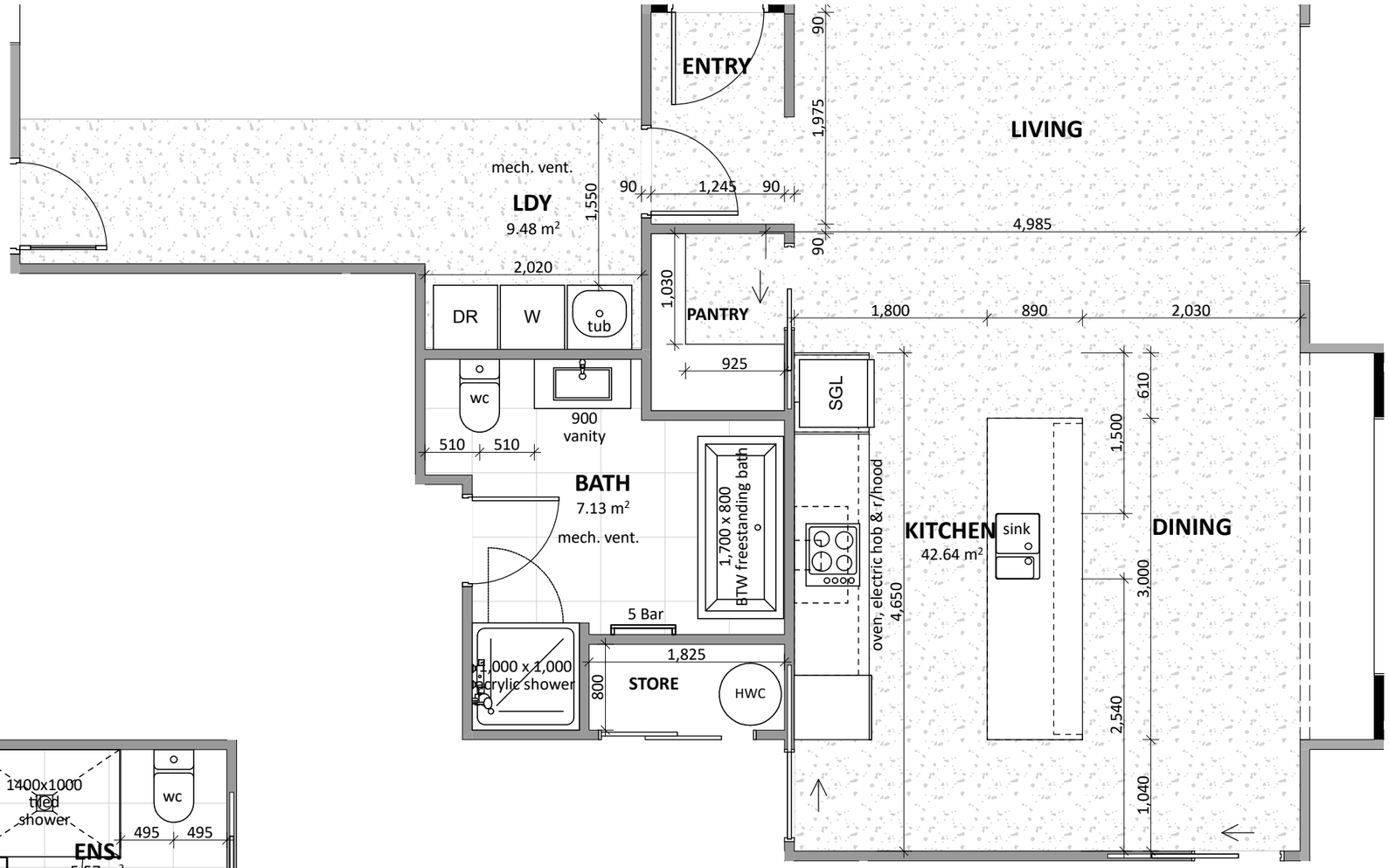

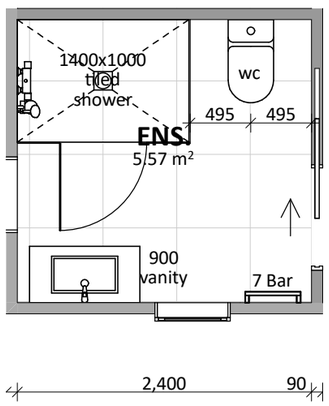

Floor Types Key:

= Tiled Floor

= Vinyl Floor

Barrett Homes

Project No: MOOR13	Designed: NS	Wind: HIGH	Drawing: KITCHEN & BATHROOM	Date: 14/05/2026
Plan: New Design	Drawn: -	EQ: 1	Client Name: BARRETT HOMES (NORTHLAND) LTD	Rev:
Version: 1.1	Checked: KB	Exposure: D	Site Address: LOT 13, 28 MOORING WAY	Sheet: 6
	design@barretthomes.co.nz	Council: WDC	ONE TREE POINT, WHANGAREI	Scale: 1:50

Y:¥GM Projects¥NORTHLAND¥Marsden Cove (One Tree Point)¥The Mooring¥MOOR13¥Concept Plans¥1.1¥MOOR13.pln

ALL PLANS ARE COPYRIGHT TO BARRETT HOMES Ltd. All rights reserved.
No part of this work covered by copyright may be reproduced or copied without written permission.

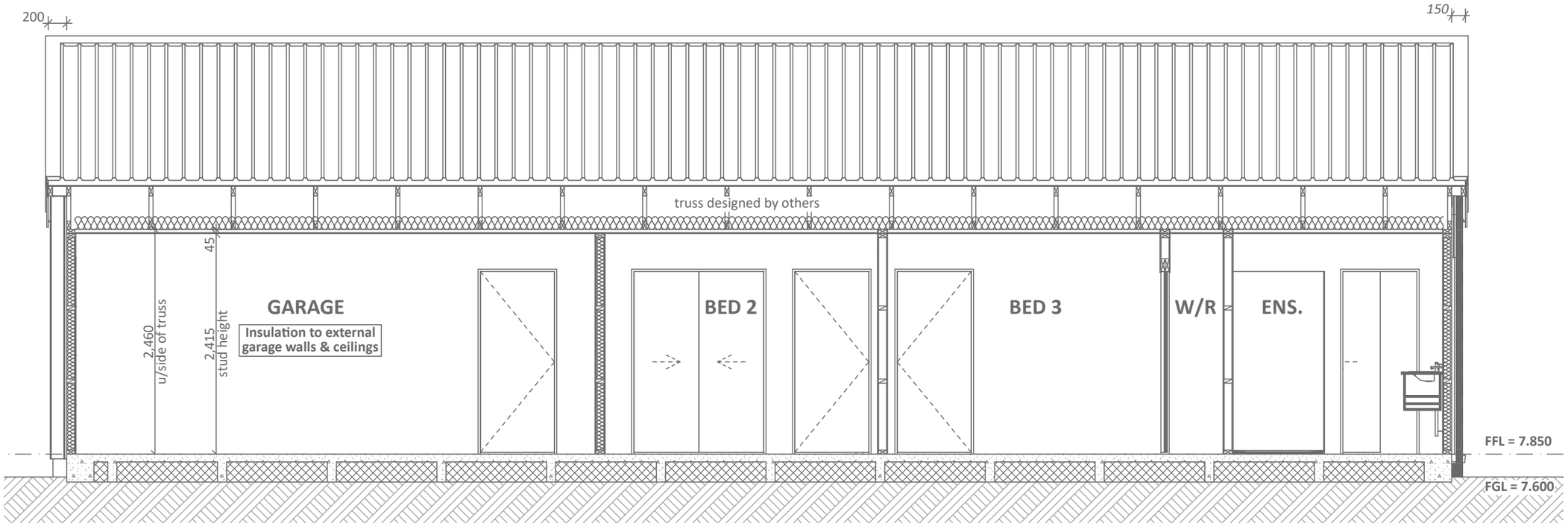

CROSS SECTION A

SCALE 1:50

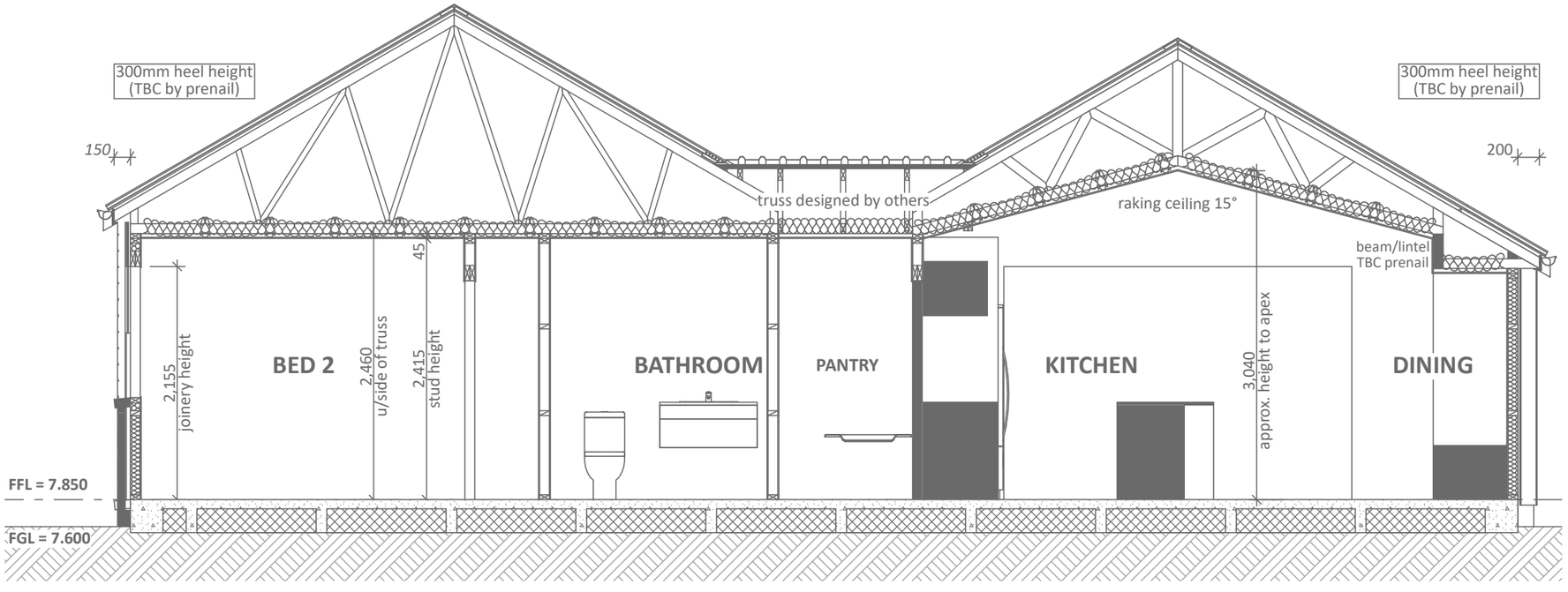

CROSS SECTION B

SCALE 1:50

CONCEPT PLAN APPROVAL (confirmation to consent drawings)

Signature ***Date***

CONCEPT ONLY

MINOR VARIATIONS TO THE PLANS MAY BE NECESSARY DURING WORKING DRAWINGS DUE TO BRACING REQUIREMENTS, ENGINEERING AND UNFORSEEN SITE CONDITIONS

Barrett Homes

Project No:	MOOR13	Designed:	NS	Wind:	HIGH	Drawing: CROSS SECTIONS	Date: 14/05/2026
Plan:	New Design	Drawn:	-	EQ:	1	Client Name: BARRETT HOMES (NORTHLAND) LTD	Rev:
Version:	1.1	Checked:	KB	Exposure:	D	Site Address: LOT 13, 28 MOORING WAY	Sheet: 7
			design@barretthomes.co.nz	Council:	WDC	ONE TREE POINT, WHANGAREI	Scale: 1:50

Y:¥GM Projects¥NORTHLAND¥Marsden Cove (One Tree Point)¥The Mooring¥MOOR13¥Concept Plans¥1.1¥MOOR13.pln

ALL PLANS ARE COPYRIGHT TO BARRETT HOMES Ltd. All rights reserved.
No part of this work covered by copyright may be reproduced or copied without written permission.

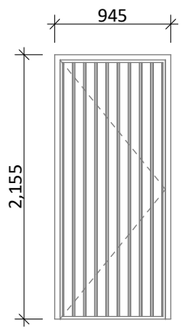

D-01
*Rebated joinery

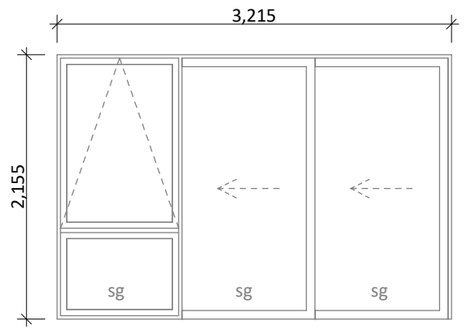

D-02
*Rebated joinery

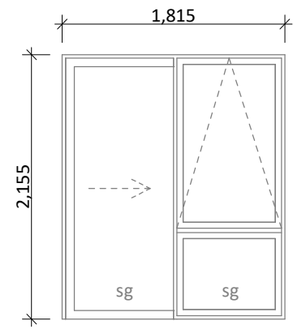

D-03, D-04
*Rebated joinery

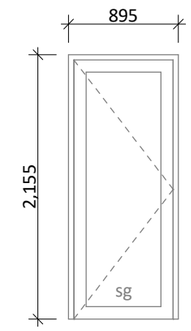

D-05

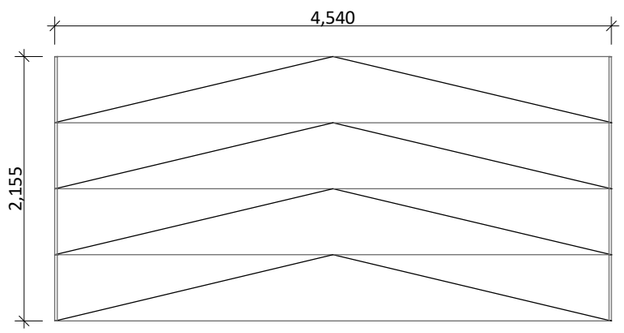

D-06
*Insulated Sectional Panels

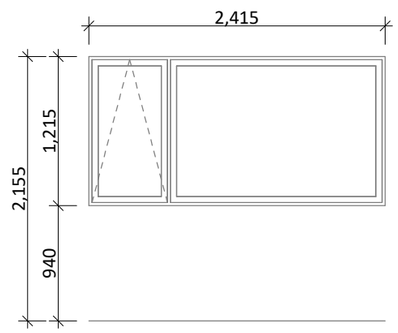

W-01

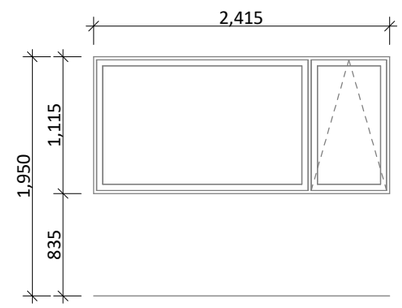

W-02

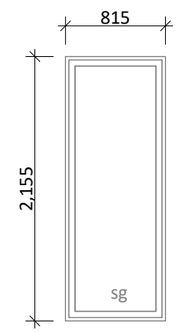

W-03

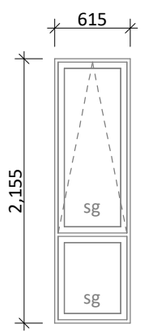

W-04
sg/obsc

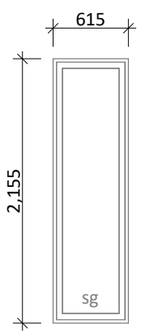

W-05
sg/obsc

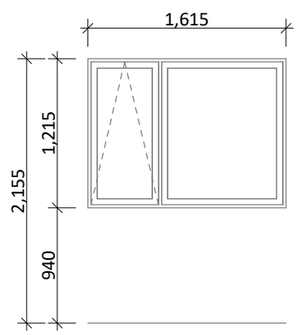

W-06

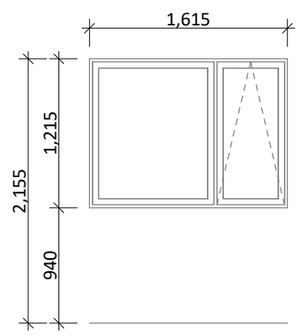

W-07

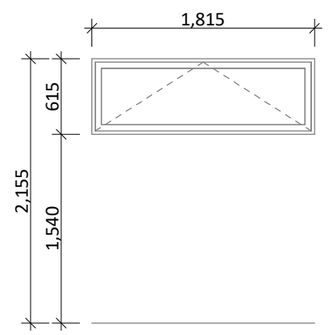

W-08

General notes:

Aluminium joinery head heights to be 2.155m (excludes DINING window & rebated joinery units). Refer to floor plan for door & window sizes. Joinery schedule & sizes to be confirmed on site PRIOR to manufacture

Thermally improved double glazing to all window and door joinery including garage joinery.

Glazing in accordance with NZS 4223 & 2016 amendments.
All glazing clear float unless noted anywhere, (refer to joinery schedule)
- Low level glazing = Any glazing within 800mm from FFL, depending on size and proportions, safety glass or 5mm annealed will be required.
- Doors with glazing area > 0.75m^2 = safety glass
- Doors with glazing area < 0.75m^2 = 5mm annealed
- Side panels within 800mm of a door = safety glass, side panels not within 800mm of door considered a window.

sg = Safety glass as required by standards, joinery manufacturer to take precedence
ss = Safety stays (in accordance with NZBC:F4 clause 2.0)
obsc = Obscure glass

REBATED JOINERY

Rebated joinery sizes are to be confirmed with joinery manufacturer.

CONCEPT PLAN APPROVAL (confirmation to consent drawings)
Signature *Date*

CONCEPT ONLY
MINOR VARIATIONS TO THE PLANS MAY BE NECESSARY DURING WORKING DRAWINGS DUE TO BRACING REQUIREMENTS, ENGINEERING AND UNFORSEEN SITE CONDITIONS

Y:¥GM Projects¥NORTHLAND¥Marsden Cove (One Tree Point)¥The Mooring¥MOOR13¥Concept Plans¥1.1¥MOOR13.pln

ALL PLANS ARE COPYRIGHT TO BARRETT HOMES Ltd. All rights reserved.
No part of this work covered by copyright may be reproduced or copied without written permission.

Barrett Homes

Project No:	MOOR13	Designed:	NS	Wind:	HIGH	Drawing:	JOINERY SCHEDULE	Date:	14/05/2026
Plan:	New Design	Drawn:	-	EQ:	1	Client Name:	BARRETT HOMES (NORTHLAND) LTD	Rev:	
Version:	1.1	Checked:	KB	Exposure:	D	Site Address:	LOT 13, 28 MOORING WAY	Sheet:	8
		design@barretthomes.co.nz		Council:	WDC		ONE TREE POINT, WHANGAREI	Scale:	1:50