Barrett Homes

Welcome to the *whānau.*

CONTENTS:

	COVER SHEET
	MATERIALITY
1	ELEVATIONS
2	ELEVATIONS
3	SITE LOCATION PLAN
4	SITE PLAN
5	CONCEPT PLAN
6	KITCHEN & BATHROOM
7	CROSS SECTIONS A & B
8	CROSS SECTION C
9	JOINERY SCHEDULE

NEW DWELLING FOR:

ADDRESS:
18A HEAPHY ROAD, ŌPUNAKE,
TARANAKI

Y:¥GM Projects¥TARANAKI¥Build Only¥Heaphy Road¥Lot 2¥Concept Plans¥HR2.pln

ALL PLANS ARE COPYRIGHT TO BARRETT HOMES Ltd. All rights reserved. No part of this work covered by copyright may be reproduced or copied without written permission.

Barrett Homes

Project No:	HEAPHY2	Designed:	NS	Wind:	MEDIUM	Drawing:	COVER SHEET	Date:	9/06/2026
Plan:	LANCEWOOD Alt.	Drawn:	-	EQ:	1	Client Name:		Rev:	
Version:	1.0	Checked:	KB	Exposure:	D	Site Address:	18A HEAPHY ROAD, ŌPUNAKE,	Sheet:	
		design@barretthomes.co.nz		Council:	STDC		TARANAKI	Scale:	

Roofing
trapezoidal profile

Panel cladding
Duragroove Smooth wide (150)
panel cladding

Brick cladding
- Black

Joinery
- Black (match cladding)

Horizontal cladding
- Selected Horizontal Cedar W/B
cladding

CONCEPT PLAN APPROVAL (confirmation to consent drawings)
Signature *Date*

CONCEPT ONLY
MINOR VARIATIONS TO THE PLANS MAY BE NECESSARY DURING WORKING DRAWINGS DUE TO BRACING REQUIREMENTS, ENGINEERING AND UNFORSEEN SITE CONDITIONS

**The above materiality is for look & feel purposes only*

Y:¥GM Projects¥TARANAKI¥Build Only¥Heaphy Road¥Lot 2¥Concept Plans¥HR2.pln

ALL PLANS ARE COPYRIGHT TO BARRETT HOMES Ltd. All rights reserved. No part of this work covered by copyright may be reproduced or copied without written permission.

Barrett Homes

Project No:	HEAPHY2	Designed:	NS	Wind:	MEDIUM	Drawing: MATERIALITY	Date: 9/06/2026
Plan:	LANCEWOOD Alt.	Drawn:	-	EQ:	1	Client Name:	Rev:
Version:	1.0	Checked:	KB	Exposure:	D	Site Address: 18A HEAPHY ROAD, ŌPUNAKE,	Sheet:
		design@barretthomes.co.nz		Council:	STDC	TARANAKI	Scale:

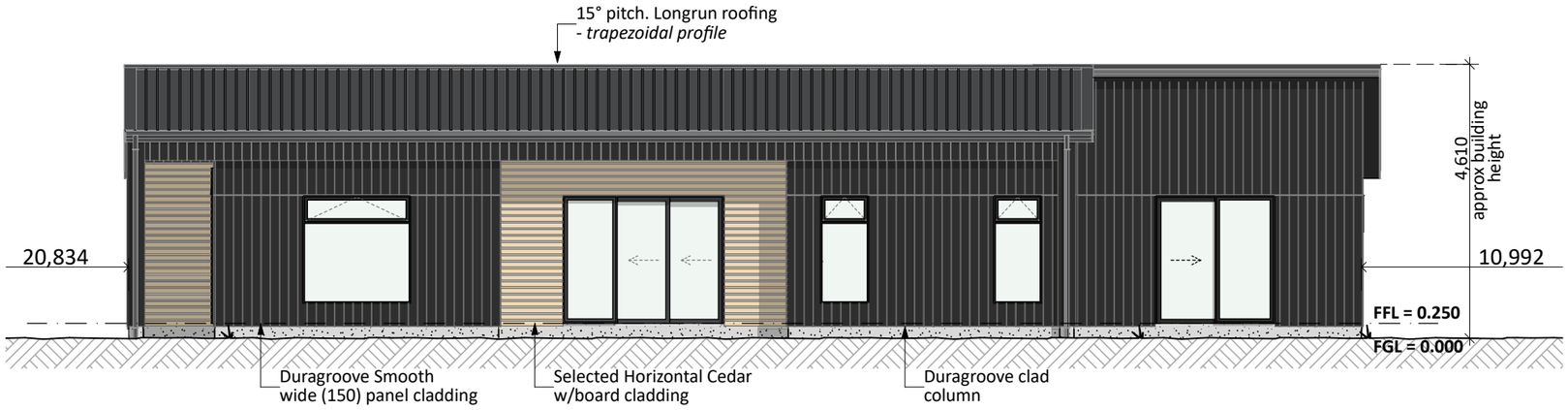

NORTH ELEVATION

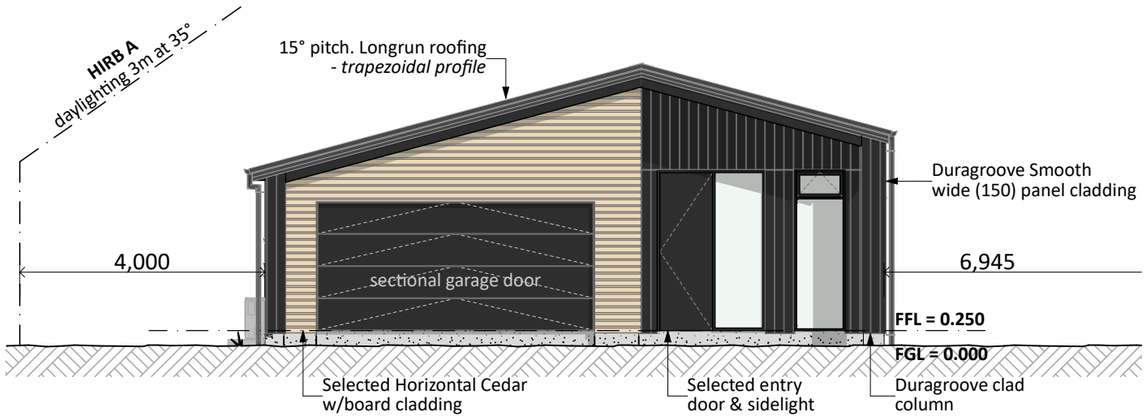

EAST ELEVATION

General Notes:

Any encroachments shown are to be confirmed by a registered surveyor prior to commencement of foundations. No liability shall be held by designer with this confirmation.

NZBC D1/AS1 Access
Minimum slip resistance to steps and landings
Concrete or H5 timber step to all access points, min. 150mm and max. 190mm below finished floor level.

CJ = Control joint

Foundation:

Raft floor TBC

Wall Cladding:

Duragroove Smooth wide (150) panel cladding
Selected Horizontal Cedar w/board cladding
70 series brick veneer - ensure cavity & weep holes are free from excess mortar

Roof Cladding:

15° pitch. Longrun roofing - *Trapezoidal profile*

Fascia and Spouting:

COLORCOTE fascia & spouting with 80mm Ø Alipipes - powder coated aluminium downpipes

Joinery:

Selected powder coated aluminium joinery with thermally improved Low E double glazing.

PRELIMINARY ONLY.
Elevations are subject to the following:
- Site Levels

CONCEPT PLAN APPROVAL (confirmation to consent drawings)
Signature *Date*

CONCEPT ONLY
MINOR VARIATIONS TO THE PLANS MAY BE NECESSARY DURING WORKING DRAWINGS DUE TO BRACING REQUIREMENTS, ENGINEERING AND UNFORSEEN SITE CONDITIONS

Project No:	HEAPHY2	Designed:	NS	Wind:	MEDIUM	Drawing:	ELEVATIONS	Date:	9/06/2026
Plan:	LANCEWOOD Alt.	Drawn:	-	EQ:	1	Client Name:		Rev:	
Version:	1.0	Checked:	KB	Exposure:	D	Site Address:	18A HEAPHY ROAD, ŌPUNAKE,	Sheet:	1
		design@barretthomes.co.nz		Council:	STDC		TARANAKI	Scale:	1:100

Barrett Homes

Y:\GM Projects\TARANAKI\Build Only\Heaphy Road\Lot 2\Concept Plans\HR2.pln

ALL PLANS ARE COPYRIGHT TO BARRETT HOMES Ltd. All rights reserved. No part of this work covered by copyright may be reproduced or copied without written permission.

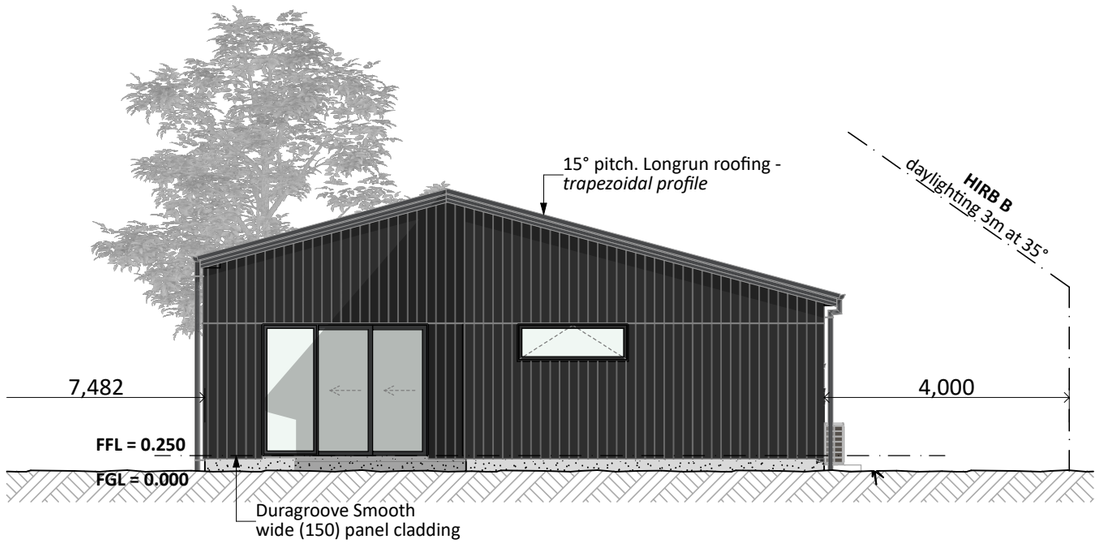

WEST ELEVATION

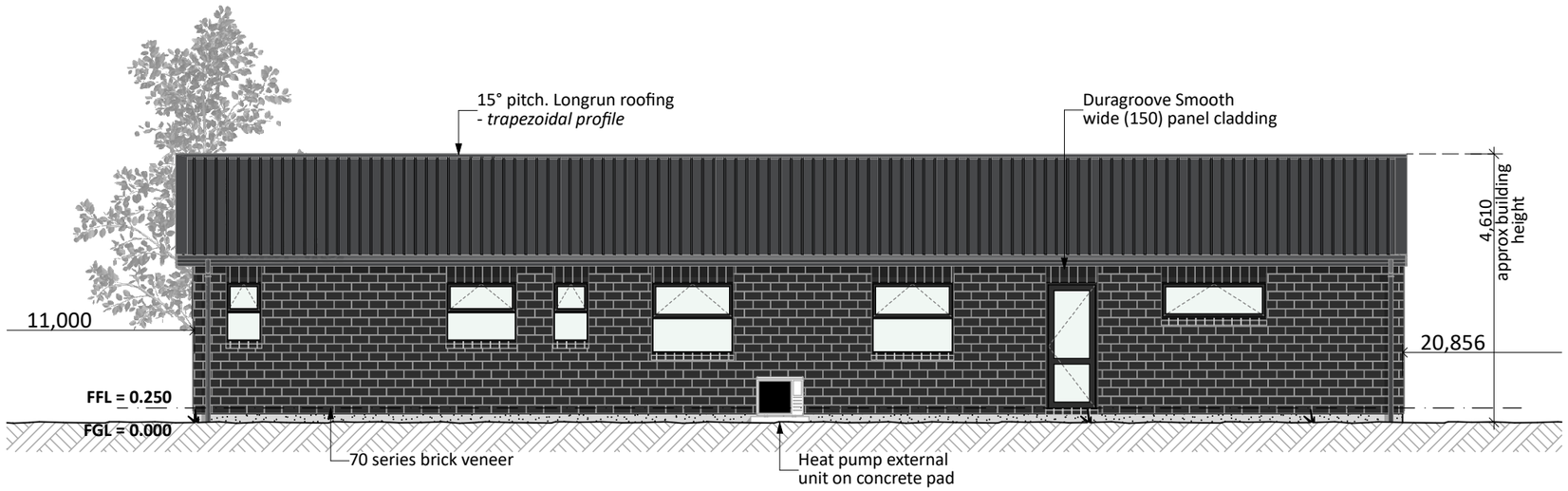

SOUTH ELEVATION

General Notes:

Any encroachments shown are to be confirmed by a registered surveyor prior to commencement of foundations. No liability shall be held by designer with this confirmation.

NZBC D1/AS1 Access
Minimum slip resistance to steps and landings
Concrete or H5 timber step to all access points, min. 150mm and max. 190mm below finished floor level.

CJ = Control joint

Foundation:

Raft floor TBC

Wall Cladding:

Duragroove Smooth wide (150) panel cladding
Selected Horizontal Cedar w/board cladding
70 series brick veneer - ensure cavity & weep holes are free from excess mortar

Roof Cladding:

15° pitch. Longrun roofing - *Trapezoidal profile*

Fascia and Spouting:

COLORCOTE fascia & spouting with 80mm Ø Alipipes - powder coated aluminium downpipes

Joinery:

Selected powder coated aluminium joinery with thermally improved Low E double glazing.

PRELIMINARY ONLY.
Elevations are subject to the following:
- Site Levels

CONCEPT PLAN APPROVAL (confirmation to consent drawings)
Signature *Date*

CONCEPT ONLY
MINOR VARIATIONS TO THE PLANS MAY BE NECESSARY DURING WORKING DRAWINGS DUE TO BRACING REQUIREMENTS, ENGINEERING AND UNFORSEEN SITE CONDITIONS

Project No:	HEAPHY2	Designed:	NS	Wind:	MEDIUM	Drawing:	ELEVATIONS	Date:	9/06/2026
Plan:	LANCEWOOD Alt.	Drawn:	-	EQ:	1	Client Name:		Rev:	
Version:	1.0	Checked:	KB	Exposure:	D	Site Address:	18A HEAPHY ROAD, ŌPUNAKE,	Sheet:	2
		design@barretthomes.co.nz		Council:	STDC		TARANAKI	Scale:	1:100

Barrett Homes

Y:¥GM Projects¥TARANAKI¥Build Only¥Heaphy Road¥Lot 2¥Concept Plans¥HR2.pln

ALL PLANS ARE COPYRIGHT TO BARRETT HOMES Ltd. All rights reserved. No part of this work covered by copyright may be reproduced or copied without written permission.

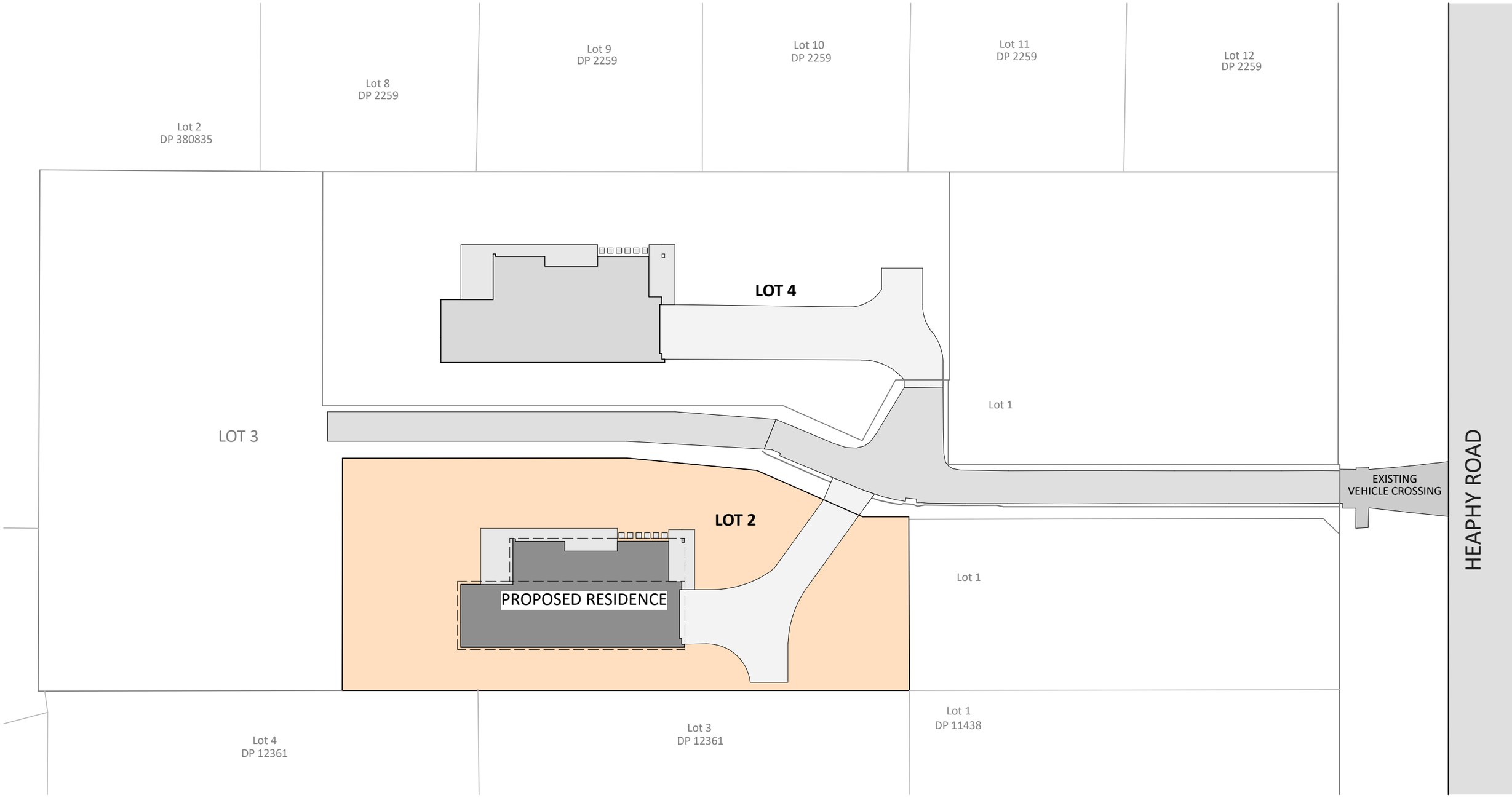

CONCEPT PLAN APPROVAL (confirmation to consent drawings)

Signature ***Date***

CONCEPT ONLY

MINOR VARIATIONS TO THE PLANS MAY BE NECESSARY DURING WORKING DRAWINGS DUE TO BRACING REQUIREMENTS, ENGINEERING AND UNFORSEEN SITE CONDITIONS

Barrett Homes

Project No:	HEAPHY2	Designed:	NS	Wind:	MEDIUM	Drawing:	SITE LOCATION PLAN	Date:	9/06/2026
Plan:	LANCEWOOD Alt.	Drawn:	-	EQ:	1	Client Name:		Rev:	
Version:	1.0	Checked:	KB	Exposure:	D	Site Address:	18A HEAPHY ROAD, ŌPUNAKE,	Sheet:	3
			design@barretthomes.co.nz	Council:	STDC		TARANAKI	Scale:	1:350

Y:¥GM Projects¥TARANAKI¥Build Only¥Heaphy Road¥Lot 2¥Concept Plans¥HR2.pln

ALL PLANS ARE COPYRIGHT TO BARRETT HOMES Ltd. All rights reserved. No part of this work covered by copyright may be reproduced or copied without written permission.

Information required/awaiting confirmation:

- Sewer / Storm water disposal design
- Site levels/contours:

Existing and proposed site levels, contours, and overland flow paths to be reviewed and confirmed by the geotechnical engineer. (Site grading and/or retaining may be required to ensure overland flow paths are directed toward Heaphy Road and away from adjoining properties.)

Proposed stormwater design and secondary overland flow paths subject to geotechnical engineer review.

Preliminary concept only - subject to confirmation of final engineering designs and site levels.

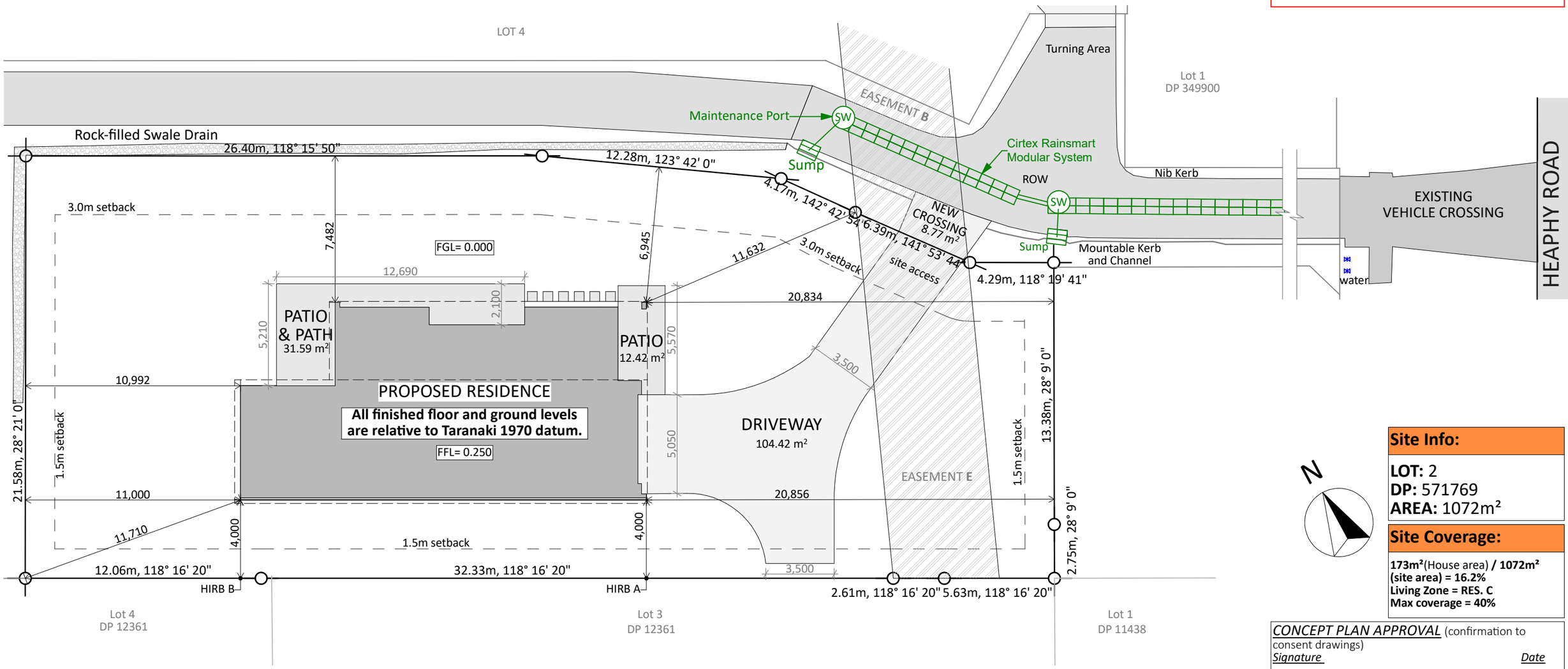

Site Info:

LOT: 2
DP: 571769
AREA: 1072m²

Site Coverage:

173m²(House area) **/ 1072m²**
(site area) = 16.2%
Living Zone = RES. C
Max coverage = 40%

CONCEPT PLAN APPROVAL (confirmation to consent drawings)
Signature *Date*

CONCEPT ONLY
MINOR VARIATIONS TO THE PLANS MAY BE NECESSARY DURING WORKING DRAWINGS DUE TO BRACING REQUIREMENTS, ENGINEERING AND UNFORSEEN SITE CONDITIONS

Project No: HEAPHY2	Designed: NS	Wind: MEDIUM	Drawing: SITE PLAN	Date: 9/06/2026
Plan: LANCEWOOD Alt.	Drawn: -	EQ: 1	Client Name:	Rev:
Version: 1.0	Checked: KB	Exposure: D	Site Address: 18A HEAPHY ROAD, ŌPUNAKE, TARANAKI	Sheet: 4
design@barretthomes.co.nz		Council: STDC		Scale: 1:200, 1:500

Barrett Homes

Y:¥GM Projects¥TARANAKI¥Build Only¥Heaphy Road¥Lot 2¥Concept Plans¥HR2.pln

ALL PLANS ARE COPYRIGHT TO BARRETT HOMES Ltd. All rights reserved. No part of this work covered by copyright may be reproduced or copied without written permission.

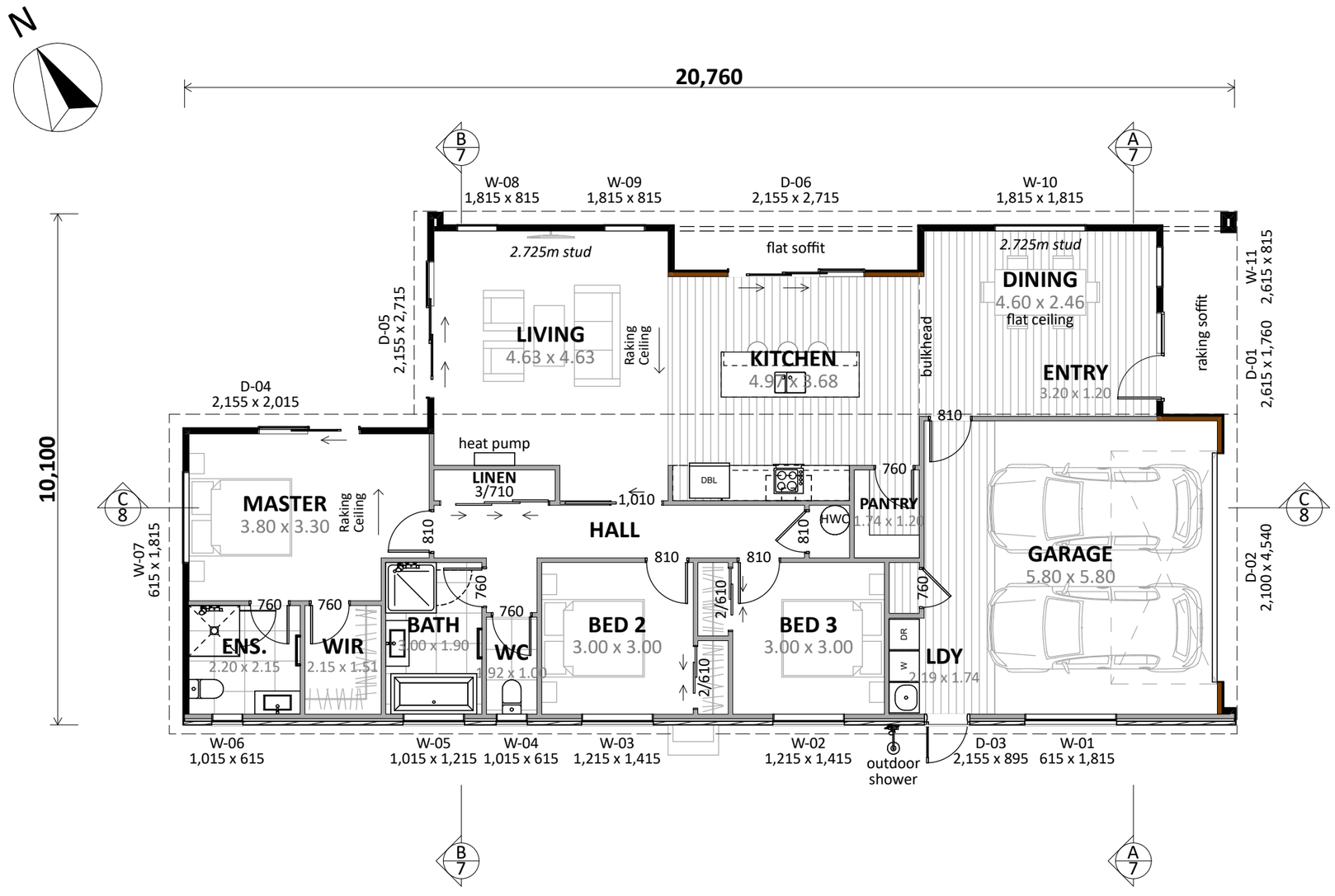

Plan Notes:
2.425 Stud height throughout
2.725 Stud height to Dining/Kitchen/Living
All joinery 2155 head height
Raking ceiling to Kitchen/Living/Master (Parallel Truss)

Floor Area:

Area o/frame: 170.51 m²
Area o/foundation: 173.00 m²

Cladding Key:

- **INNOVA Duragroove**
- **Cedar**
- **Brick Veneer**

CONCEPT PLAN APPROVAL (confirmation to consent drawings)
Signature *Date*

CONCEPT ONLY
MINOR VARIATIONS TO THE PLANS MAY BE NECESSARY DURING WORKING DRAWINGS DUE TO BRACING REQUIREMENTS, ENGINEERING AND UNFORSEEN SITE CONDITIONS

Barrett Homes

Project No:	HEAPHY2	Designed:	NS	Wind:	MEDIUM	Drawing:	CONCEPT PLAN	Date:	9/06/2026
Plan:	LANCEWOOD Alt.	Drawn:	-	EQ:	1	Client Name:		Rev:	
Version:	1.0	Checked:	KB	Exposure:	D	Site Address:	18A HEAPHY ROAD, ŌPUNAKE,	Sheet:	5
			design@barretthomes.co.nz	Council:	STDC		TARANAKI	Scale:	1:100

Y:¥GM Projects¥TARANAKI¥Build Only¥Heaphy Road¥Lot 2¥Concept Plans¥HR2.pln

ALL PLANS ARE COPYRIGHT TO BARRETT HOMES Ltd. All rights reserved. No part of this work covered by copyright may be reproduced or copied without written permission.

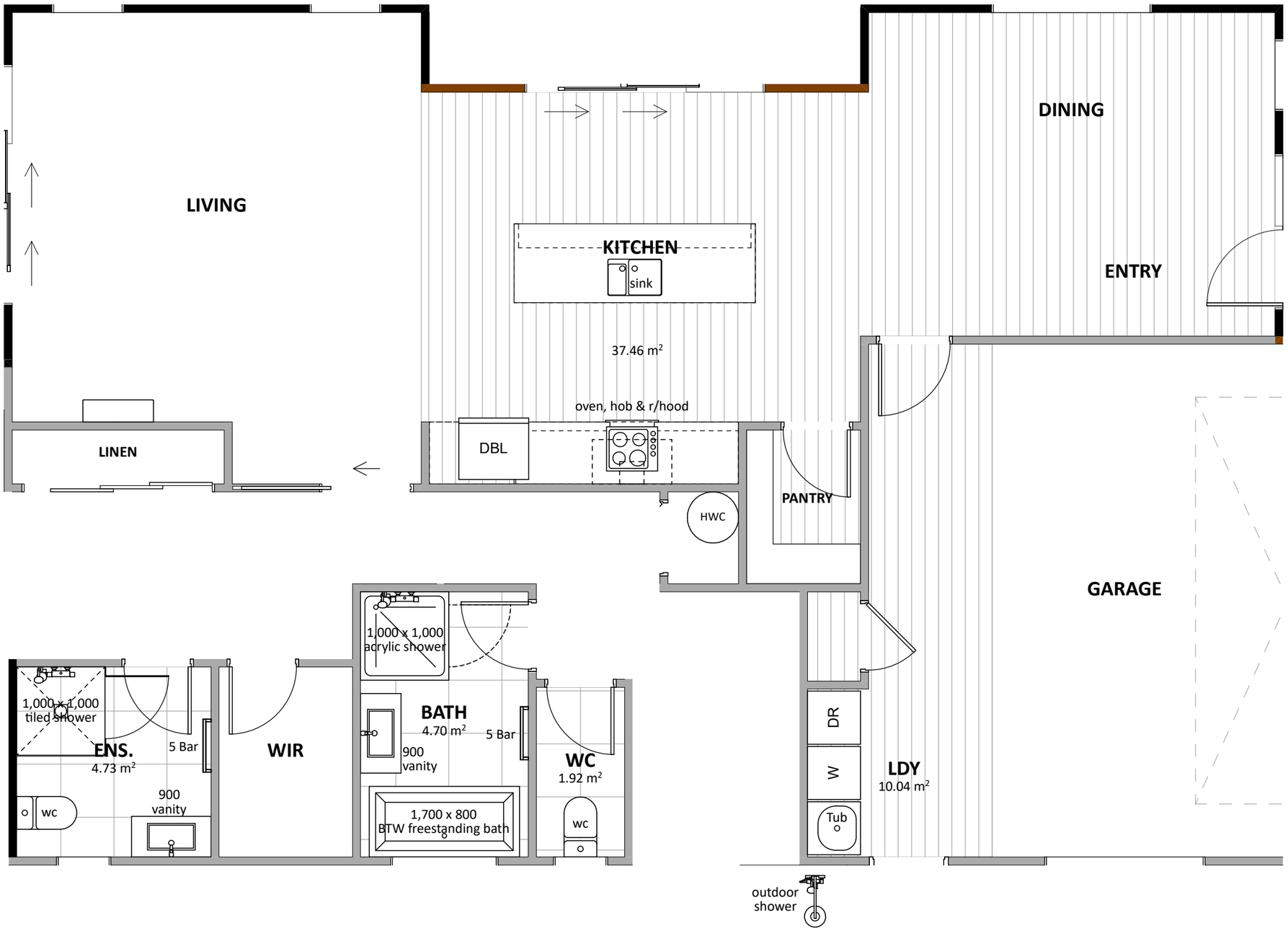

Floor Types Key:

= Vinyl Floor = Tiled Floor

CONCEPT PLAN APPROVAL (confirmation to consent drawings)

Signature *Date*

CONCEPT ONLY

MINOR VARIATIONS TO THE PLANS MAY BE NECESSARY DURING WORKING DRAWINGS DUE TO BRACING REQUIREMENTS, ENGINEERING AND UNFORSEEN SITE CONDITIONS

Barrett Homes

Project No:	HEAPHY2	Designed:	NS	Wind:	MEDIUM	Drawing: KITCHEN & BATHROOM	Date: 9/06/2026
Plan:	LANCEWOOD Alt.	Drawn:	-	EQ:	1	Client Name:	Rev:
Version:	1.0	Checked:	KB	Exposure:	D	Site Address: 18A HEAPHY ROAD, OPUNAKE,	Sheet: 6
				Council:	STDC	TARANAKI	Scale: 1:50

design@barretthomes.co.nz

Y:¥GM Projects¥TARANAKI¥Build Only¥Heaphy Road¥Lot 2¥Concept Plans¥HR2.pln

ALL PLANS ARE COPYRIGHT TO BARRETT HOMES Ltd. All rights reserved. No part of this work covered by copyright may be reproduced or copied without written permission.

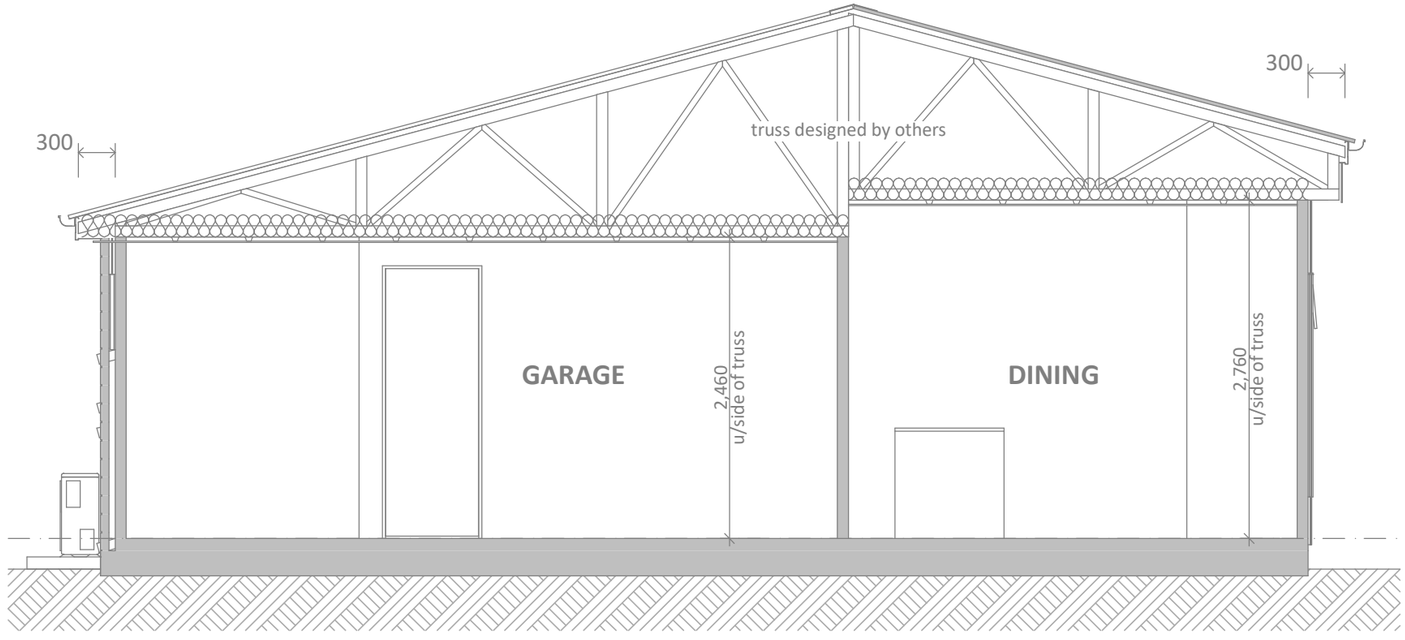

CROSS SECTION A

SCALE 1:50

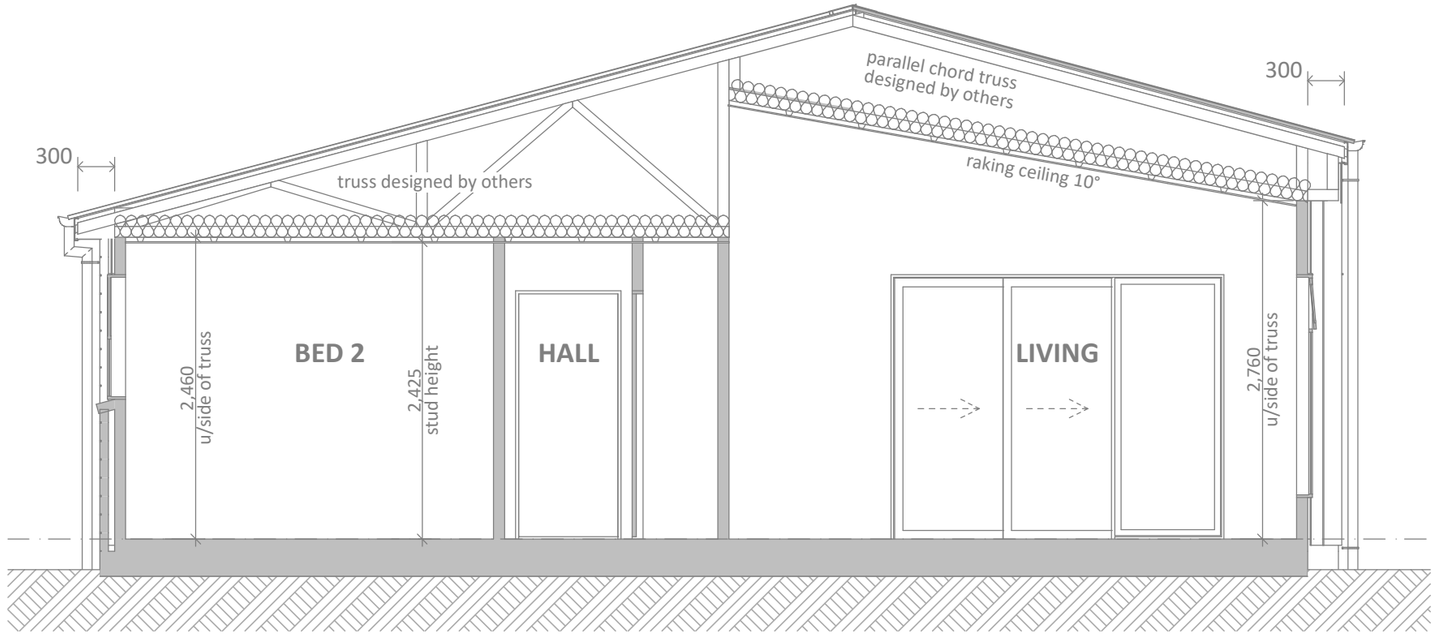

CROSS SECTION B

SCALE 1:50

CONCEPT PLAN APPROVAL (confirmation to consent drawings)

Signature ***Date***

CONCEPT ONLY

MINOR VARIATIONS TO THE PLANS MAY BE NECESSARY DURING WORKING DRAWINGS DUE TO BRACING REQUIREMENTS, ENGINEERING AND UNFORSEEN SITE CONDITIONS

Project No:	HEAPHY2	Designed:	NS	Wind:	MEDIUM	Drawing: CROSS SECTIONS A & B	Date: 9/06/2026
Plan:	LANCEWOOD Alt.	Drawn:	-	EQ:	1	Client Name:	Rev:
Version:	1.0	Checked:	KB	Exposure:	D	Site Address: 18A HEAPHY ROAD, ŌPUNAKE,	Sheet: 7
			design@barretthomes.co.nz	Council:	STDC	TARANAKI	Scale: 1:50

Barrett Homes

Y:¥GM Projects¥TARANAKI¥Build Only¥Heaphy Road¥Lot 2¥Concept Plans¥HR2.pln

ALL PLANS ARE COPYRIGHT TO BARRETT HOMES Ltd. All rights reserved. No part of this work covered by copyright may be reproduced or copied without written permission.

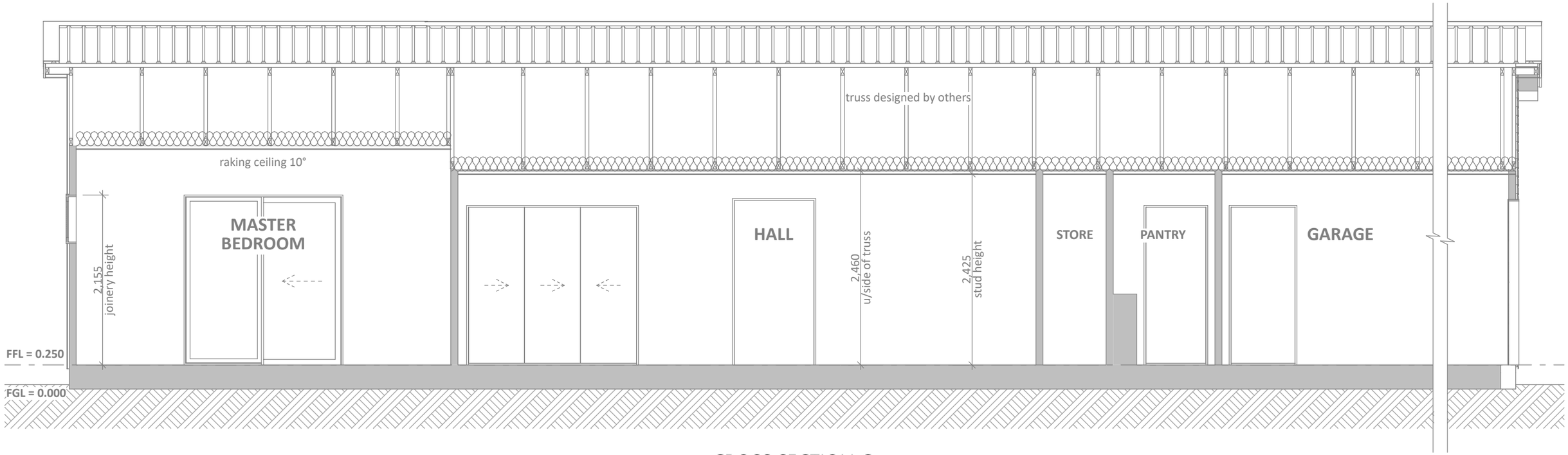

CROSS SECTION C

SCALE 1:50

CONCEPT PLAN APPROVAL (confirmation to consent drawings)

Signature ***Date***

CONCEPT ONLY

MINOR VARIATIONS TO THE PLANS MAY BE NECESSARY DURING WORKING DRAWINGS DUE TO BRACING REQUIREMENTS, ENGINEERING AND UNFORSEEN SITE CONDITIONS

Project No:	HEAPHY2	Designed:	NS	Wind:	MEDIUM	Drawing:	CROSS SECTION C	Date:	9/06/2026
Plan:	LANCEWOOD Alt.	Drawn:	-	EQ:	1	Client Name:		Rev:	
Version:	1.0	Checked:	KB	Exposure:	D	Site Address:	18A HEAPHY ROAD, ŌPUNAKE,	Sheet:	8
		design@barretthomes.co.nz		Council:	STDC		TARANAKI	Scale:	1:50

Barrett Homes

Y:¥GM Projects¥TARANAKI¥Build Only¥Heaphy Road¥Lot 2¥Concept Plans¥HR2.pln

ALL PLANS ARE COPYRIGHT TO BARRETT HOMES Ltd. All rights reserved. No part of this work covered by copyright may be reproduced or copied without written permission.

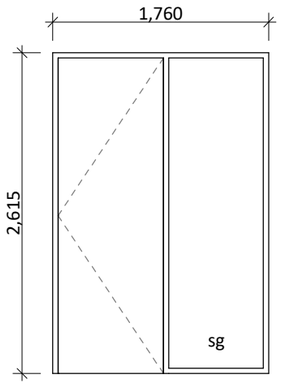

D-01

Rebated joinery
860 door leaf

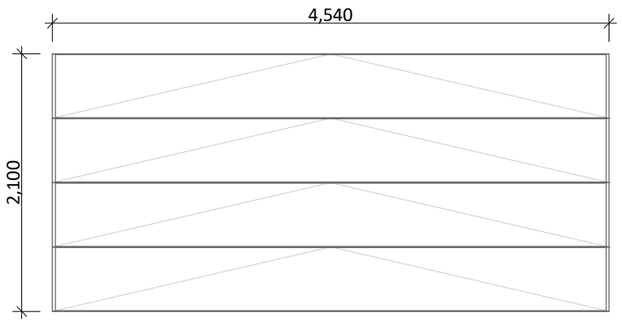

D-02

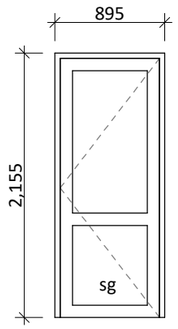

D-03

810 door leaf

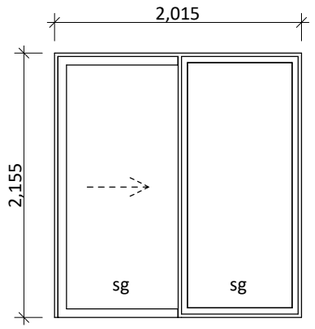

D-04

Rebated joinery

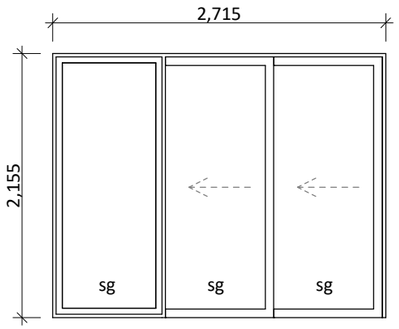

D-05, D-06

Rebated joinery

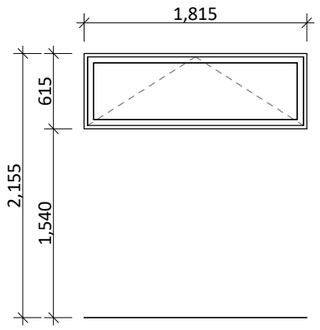

W-01, W-07

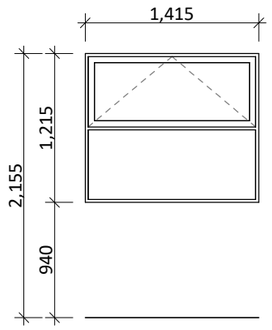

W-02, W-03

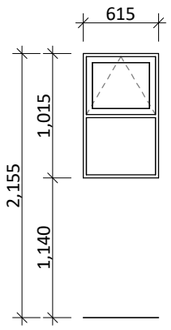

W-04, W-06

obsc/sg

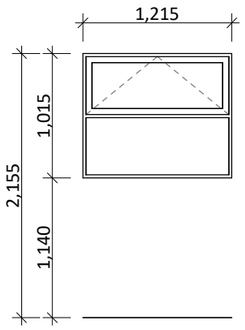

W-05

obsc/sg

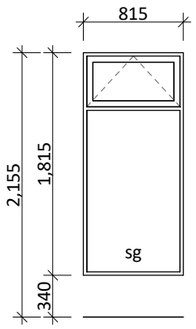

W-08, W-09

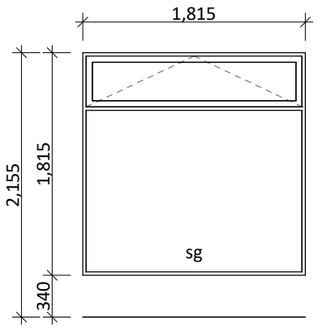

W-10

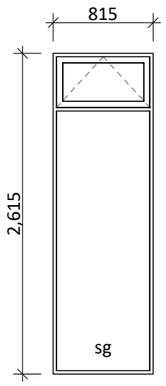

W-11

General notes:

Aluminium joinery head heights to be 2.155m (excludes rebated joinery units & entry door and window). Refer to floor plan for door & window sizes. Joinery schedule & sizes to be confirmed on site PRIOR to manufacture

All window and door joinery excluding garage (unless specified) to comply with climate zone specific minimum standards of H1/AS1

Glazing in accordance with NZS 4223 & 2016 amendments.
All glazing clear float unless noted anywhere, (refer to joinery schedule)
- Low level glazing = Any glazing within 800mm from FFL, depending on size and proportions, safety glass or 5mm annealed will be required.
- Doors with glazing area > 0.75m^2 = safety glass
- Doors with glazing area < 0.75m^2 = 5mm annealed
- Side panels within 800mm of a door = safety glass, side panels not within 800mm of door considered a window.

sg = Safety glass as required by standards, joinery manufacturer to take precedence
ss = Safety stays (in accordance with NZBC:F4 clause 2.0)
obsc = Obscure glass

REBATED JOINERY

Rebated joinery sizes are to be confirmed with joinery manufacturer.

CONCEPT PLAN APPROVAL (confirmation to consent drawings)
Signature *Date*

CONCEPT ONLY
MINOR VARIATIONS TO THE PLANS MAY BE NECESSARY DURING WORKING DRAWINGS DUE TO BRACING REQUIREMENTS, ENGINEERING AND UNFORSEEN SITE CONDITIONS

Project No:	HEAPHY2	Designed:	NS	Wind:	MEDIUM	Drawing: JOINERY SCHEDULE	Date: 9/06/2026
Plan:	LANCEWOOD Alt.	Drawn:	-	EQ:	1	Client Name:	Rev:
Version:	1.0	Checked:	KB	Exposure:	D	Site Address: 18A HEAPHY ROAD, ŌPUNAKE, TARANAKI	Sheet: 9
		design@barretthomes.co.nz		Council:	STDC		Scale: 1:50

Barrett Homes

Y:\GM Projects\TARANAKI\Build Only\Heaphy Road\Lot 2\Concept Plans\HR2.pln

ALL PLANS ARE COPYRIGHT TO BARRETT HOMES Ltd. All rights reserved. No part of this work covered by copyright may be reproduced or copied without written permission.