واش ثـــرو
WASH THRU®

RA-V1

Rollover



Version EN 1.0

9 2 0 0 1 2 8 0 4 sales@washthru.com
washthrusa www.washthru.com

Designed By:
ميكـاتـرونكـس
Mechatronics

واش ترو
WASHTHRU®

The first Saudi brand to develop and manufacture
Automatic car wash Machines

Content

Car wash stages 3
Rollover Machine 9
Machine information 11
External structure information 13
Brushing information 15
Dryer information 17
Pumps information 19
Touchless washing feature 21
Features of operational technologies 23
Technical maintenance features 39
WashCloud system 45
Site sizes 57
Safety specifications 59
Success partners 61

Washing stages

Enjoy a complete and effective washing experience, as all these steps combine to deliver the utmost cleanliness and shine.

www.washthru.com

Washing stages

www.washthru.com

1

Initial wash

The car is sprayed with preparatory chemicals to break down dirt and stubborn deposits.

This step can be performed separately (at the entrance) to help reduce the overall washing time.*



2

Underbody wash *

A dedicated stage for cleaning the underside of the car and hard-to-reach areas beneath the chassis.



3

High-pressure washing

The car is sprayed with high-pressure water, allowing for a touchless wash.



4

Spray foam

Special cleaning foam is sprayed to enhance the washing process and effectively remove dirt.

The foam spray system can be changed to a foam cascade (lava) instead of the traditional foam spraying method.*



Washing stages

5

Washing with brushes

The brushes are able to remove stubborn dirt that cannot be removed by spraying alone.

6

Initial rinse

The car is given an initial rinse to remove any remaining residues (if present).

7

Final rinse with wax spray

An additional rinsing stage that includes spraying optional polishing agents (which may come from a different water source).

8

Drying*

A separate drying system can be added at the exit.









www.washthru.com



Rollover Machine

Model number: RA-V1

Made in:
Kingdom of Saudi Arabia

Installation, training and maintenance by a specialized team

5 years control panel warranty

2 years warranty against manufacturing defects

Our Machine combines technological intelligence and superior performance

Choose wisely

www.washthru.com

Water Consumption

Water consumption ranges from 120 to 160 liters per car.

Electricity

(380 volts - 60 Hz) with a maximum power of **57** kW and a consumption of 1.15 kWh per car.

Brushes

5 ultra-soft brushes made of EVA (Ethylene Vinyl Acetate - Carlite).

Dryers

High-performance top and side dryers with 3600 RPM.

Vehicle Dimensions

Height: 2 m

Width: 2.3 m including side mirrors, 2m without side mirrors

Length: up to 5.8 m

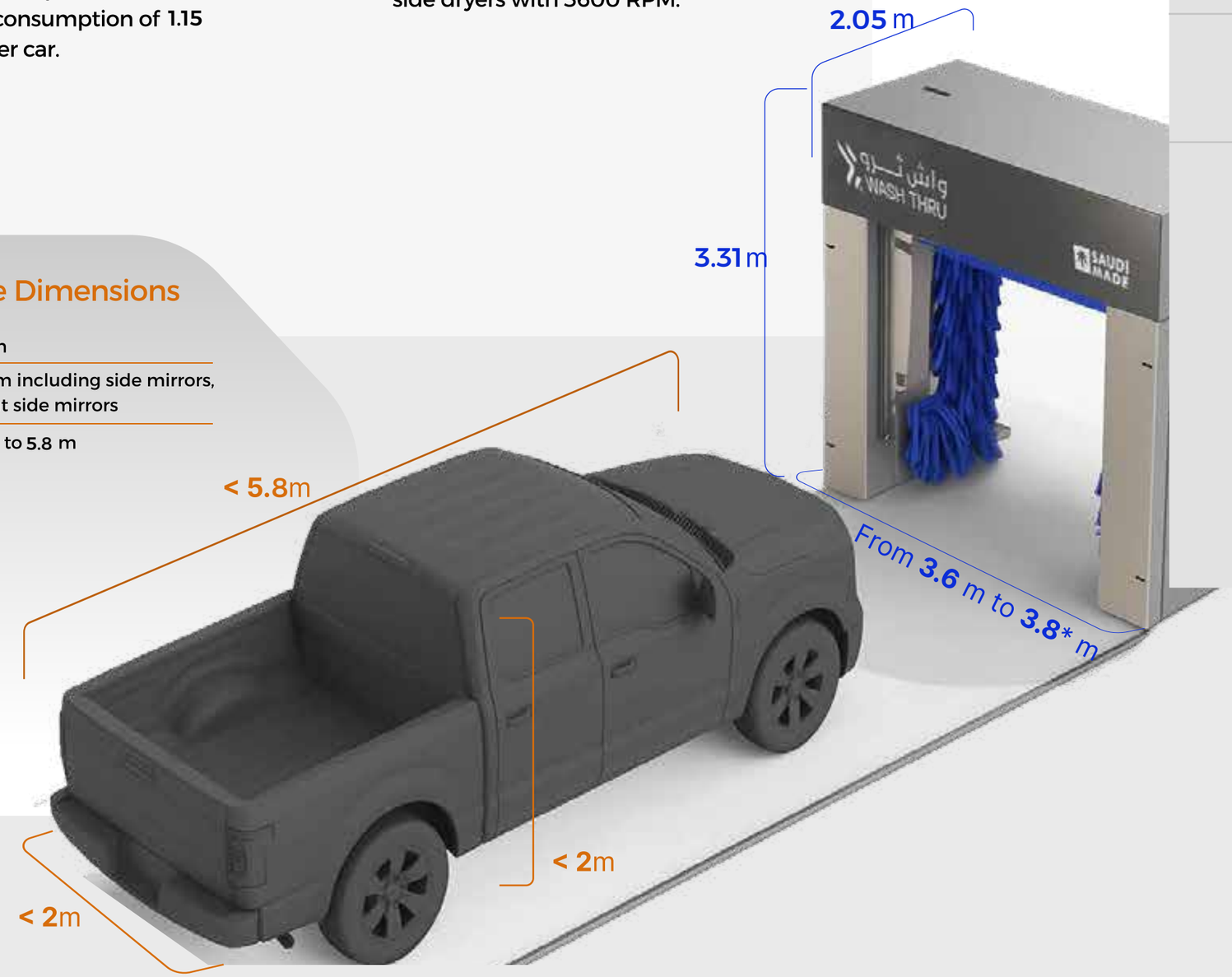

- Weight:1,660 kg
- Capable of washing cars up to 5.9 meters in length.
- The touchless washing feature provides high efficiency for vehicles with a moderate level of dirt.
- 10 built-in programs available on demand, with the ability to control (customize) them remotely.
- 10 flat nozzles (stainless steel) for washing, operating at pressure suitable for brush washing.

The touchless washing feature (high pressure) can be added.

Completion of all washing and drying stages within an average duration of

3-4 Minutes

According to the length of the car.

Optional (additional charges apply upon request)

Optional (additional charges apply upon request)

Exterior Structure

is made of rust-resistant aluminum panels.

Interior covering

made of stainless steel.

All pipes and their extensions

are made of stainless steel.

Stainless steel structure

at all contact points.

Internal structure

made of hot-dip galvanized steel, which is rust-resistant.



A design that ensures superior performance and an appearance that harmonizes with the latest technology trends.

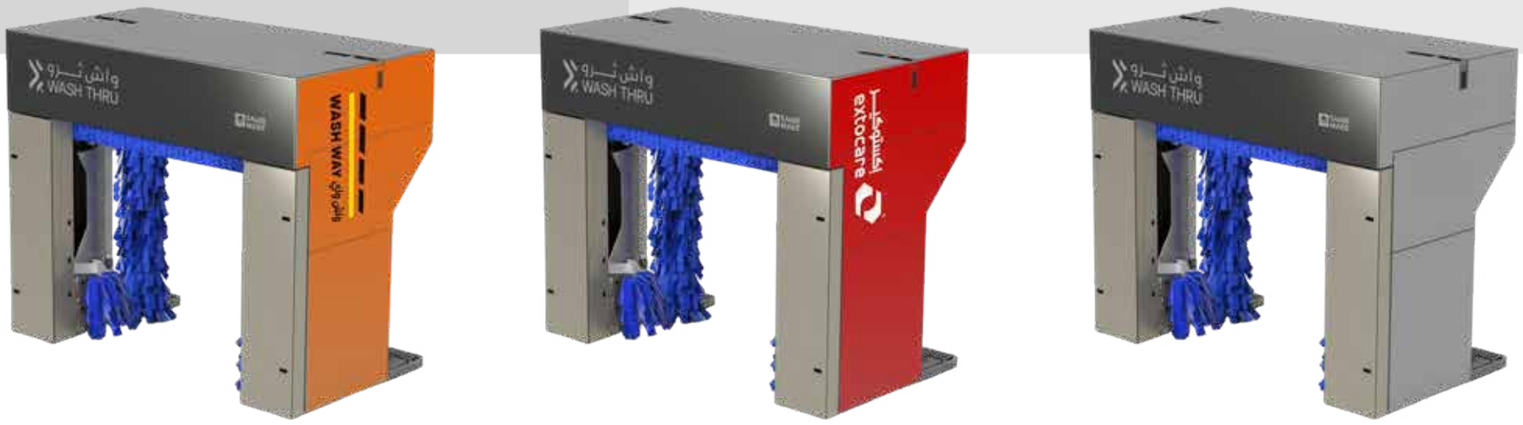

Customizable advertising area

Customizable advertising area on both sides of the device.

Brush Information

Technical Information

Technological superiority with the brushes of the automatic car washing machine.

Washing Area	Number of Brushes
Top of the car	1
Front, rear, and sides of the car	4



- **3 very soft brushes**
  made of Ethylene Vinyl Acetate (Carlite)
- **with very low hardness to ensure the safest performance.**
- **Self-cleaning brushes**
  before and during washing.
- **Touch sensors**
  Highly sensitive control unit capable of measuring brush contact up to 1 cm.

+ Brush tilt sensors for optimal adaptation to the shape of the car

+ Special angled brush for cleaning the edges and lower corners of the car.

Brush Safety

- Softer than the car's paint.
- Does not attract any dirt or debris during washing.
- Does not absorb water.
- Reduces water usage during washing.
- Long-term use up to 70,000 cars.

www.washthru.com

Modern technology ensures highly effective drying to reduce final touch-up time for your customers.

6 Powerful dryers cover all sides of the car, ensuring perfect and fast drying from every angle

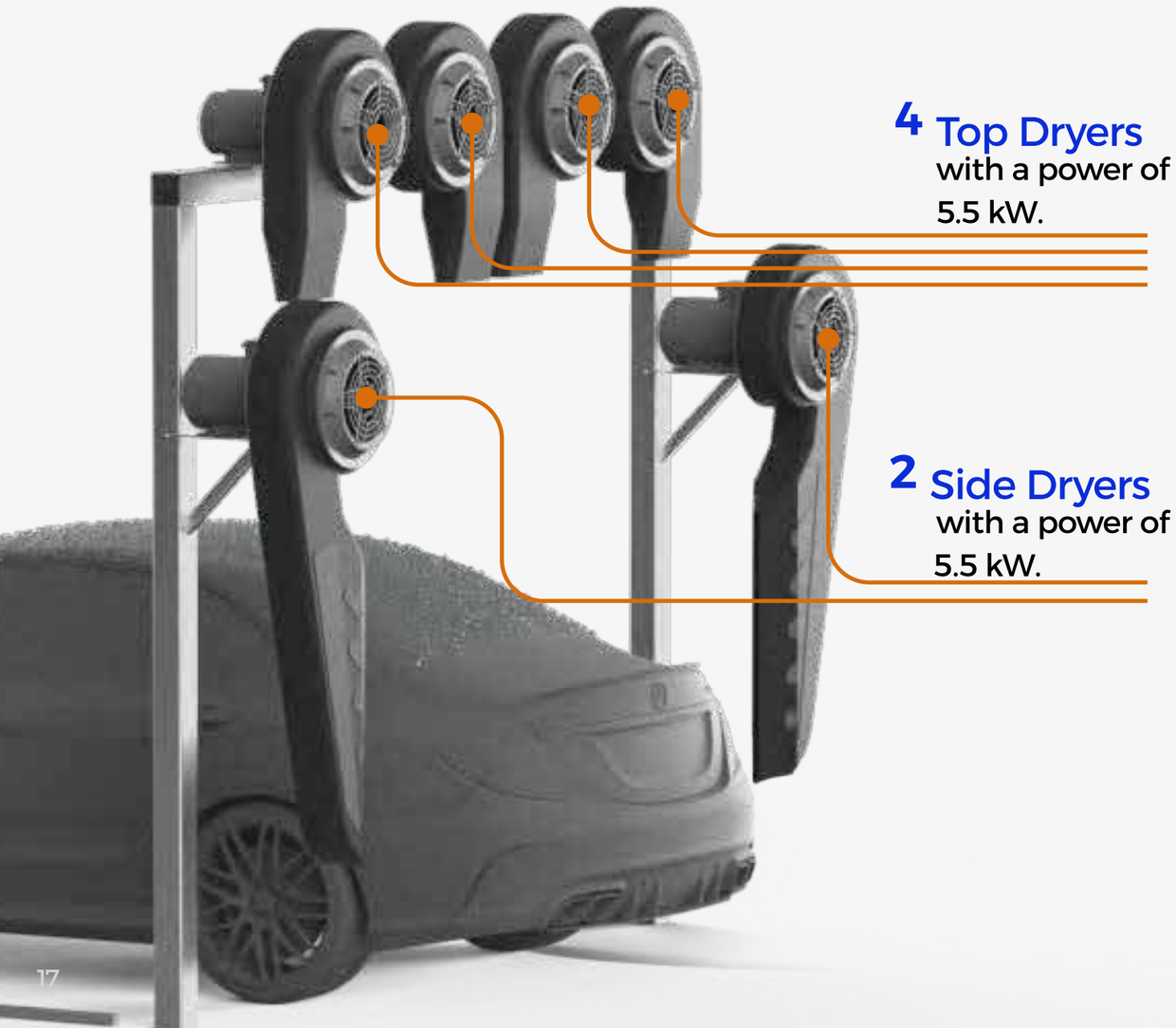

4 Top Dryers with a power of 5.5 kW.

2 Side Dryers with a power of 5.5 kW.

Separate air drying can be added at either the entrance or exit, depending on the location

- Top and side dryers with an airflow of up to 17,400 CFM to deliver the best possible results

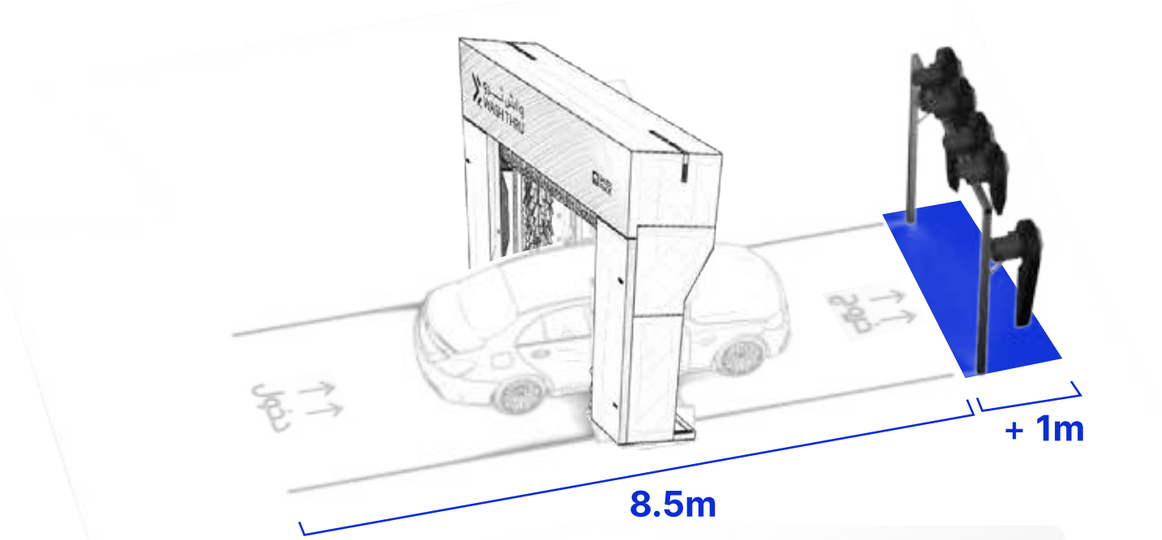

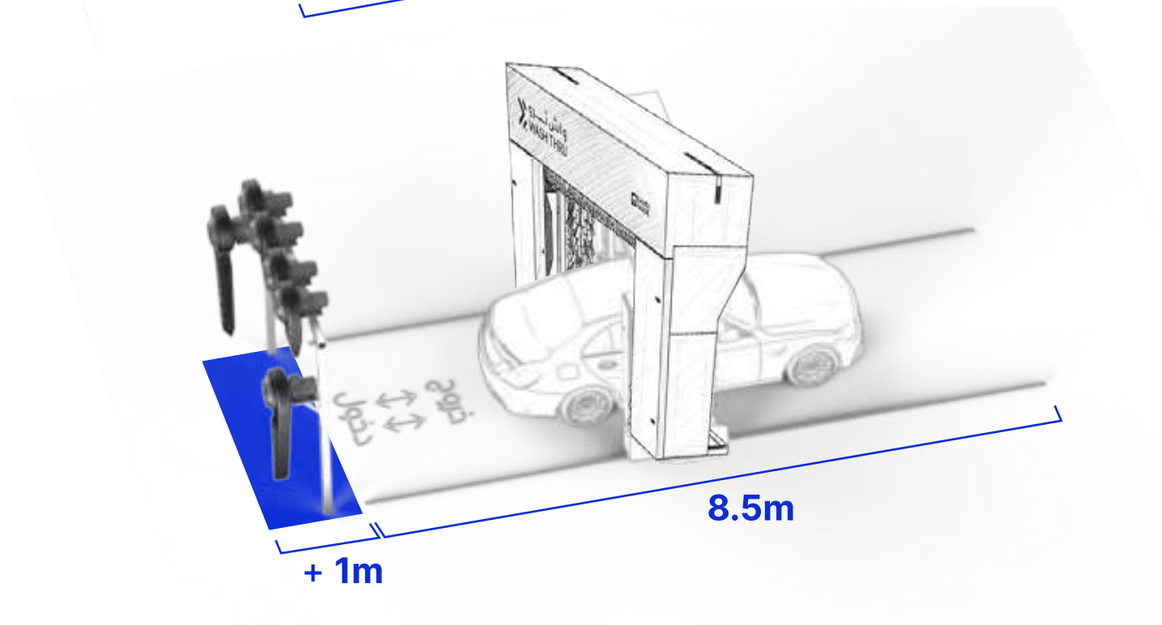

Optional (additional charges apply upon request)

Advanced technology ensures optimal water distribution, making each wash a unique experience.

Technology that pumps water with high efficiency, achieving even distribution and appropriate pressure.

The pumps operate within a safe pressure range (20-24 bar) with a cleaning impact of 1.5-2 psi.

Pumps *4-2

Medium-pressure pump (for brushes)	(9Bar)
Low-pressure pump (for final rinse)	(4Bar)

***Optional**

Medium pressure pump (Underbody wash)	(9Bar)
Low-pressure pump (for initial washing)	(4Bar)

- Made of **stainless steel**



Basic



Optional

Optional (additional charges apply upon request)

Touchless Washing*



The option for touchless washing is available to reduce washing time for vehicles with a moderate level of dirt

- Full coverage for all car sizes

Optional (additional charges apply upon request)

Operational Technology Features

Excellence in operational performance with our advanced technology features!

We combine efficiency and innovation.

www.washthru.com

Foam Spraying

Chemicals are sprayed for pre-washing the body and edges (6 nozzles) using a precision dosing pump

A foam waterfall can be added*



Optional (additional charges apply upon request)

Pre-Washing*

It can be separated from the machine by installing it at the entrance to help reduce washing time

This reduces the wash time by 1-2 minutes.



Optional (additional charges apply upon request)

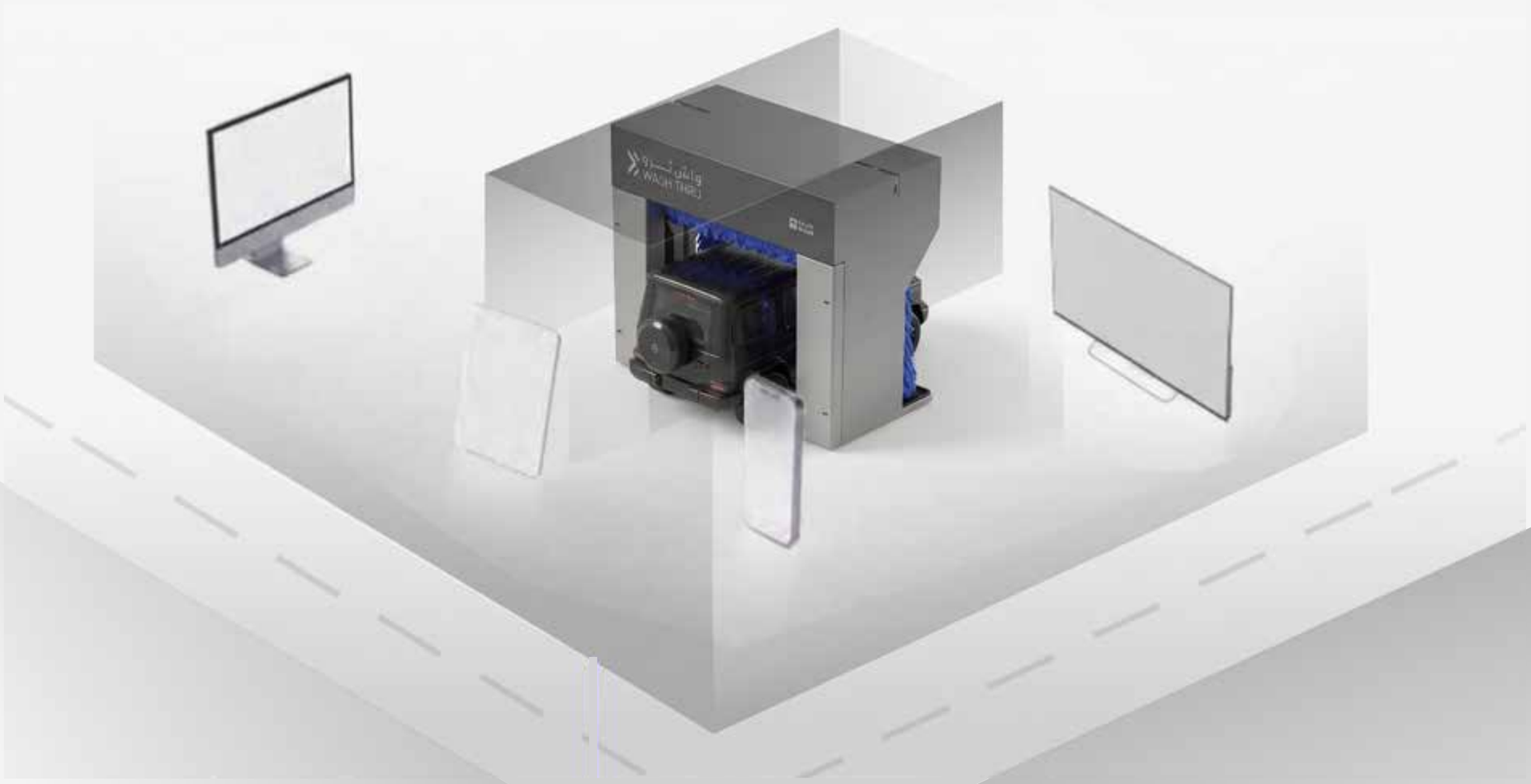

Communication Screens

Up to 6 screens can be connected:

Ability to link screens for simultaneous content transmission or to play recorded content.

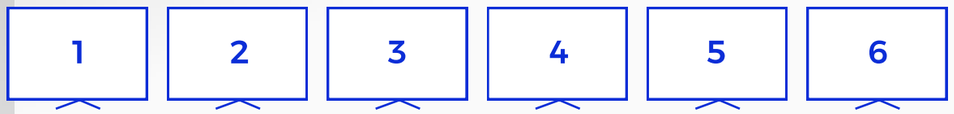



Auto Tuning Technology

This technology allows the machine to automatically reset the adjustments after each wash without human intervention.

Brushes Operate with a high degree of safety for the car.



Energy Meter (Optional)

The energy meter accurately calculates the device's electrical consumption.



Water Flow Meter (Optional)

Magnetic water flow meter to measure water consumption.





Wireless Control WiFi

Ability to access the system from any electronic device (phone, tablet) on-site or remotely* and control its features and settings.

* When subscribing to WashCloud services.

Operating Interfaces Support Five Languages

- हिन्दी Hindi
- English
- Arabic
- বাংলা Bengali
- اُردُو Urdu

Support for Monitoring/ Control

Support for monitoring/control via local cable for locations where WiFi cannot be used.



Vehicle Reports

Save all historical device information and view the number of cars, car entry times, car sizes, and the number of invoices issued by the system (if subscribed to the Kasour platform) - all wirelessly from anywhere within the device's WiFi network range.



Customer Loyalty Programs

- Optional RFID reader for customer loyalty programs.
- Easy integration with point-of-sale systems (MADA, Visa, MasterCard).
- Option to add license plate recognition camera for customer loyalty programs.



Driver mobile application

Full integration capability with the mobile application for achieving driver self-operation.

Seamless integration with point-of-sale systems and smart gates.

Self-Service Machine

Gate with camera

All vehicle reports are .sent to you

The Machine operates automatically after .payment is completed

Technical Maintenance Features

Our smart system works to keep devices running efficiently and automatically notifies you of any challenges you may face.

Ensuring performance continuity through our technical maintenance features.

www.washthru.com

Smart Maintenance System (SM)

Fully integrating devices with company systems to enhance control, monitoring, and quality in maintenance operations, enabling:

- Reviewing the historical status of all Machine components that have been replaced.
- Reviewing invoices for products and services.
- Accessing the record of previous and current maintenance tickets.
- Tracking maintenance requests.
- Reviewing and evaluating maintenance visits.



The default lifespan calculator for consumable parts

It's an interface that displays the lifespan of consumable spare parts for devices and provides system alerts when their estimated lifespan is nearing completion. This allows customers to pre-order the parts and keep them on-site so they can be replaced at the appropriate time or requested for replacement by the maintenance team.

The criteria for calculating the estimated lifespan of parts depend on:

- **Number of operational cycles**
- **Number of working hours**
- **Number of cycles**
- **Time**
- **Number of vehicles**

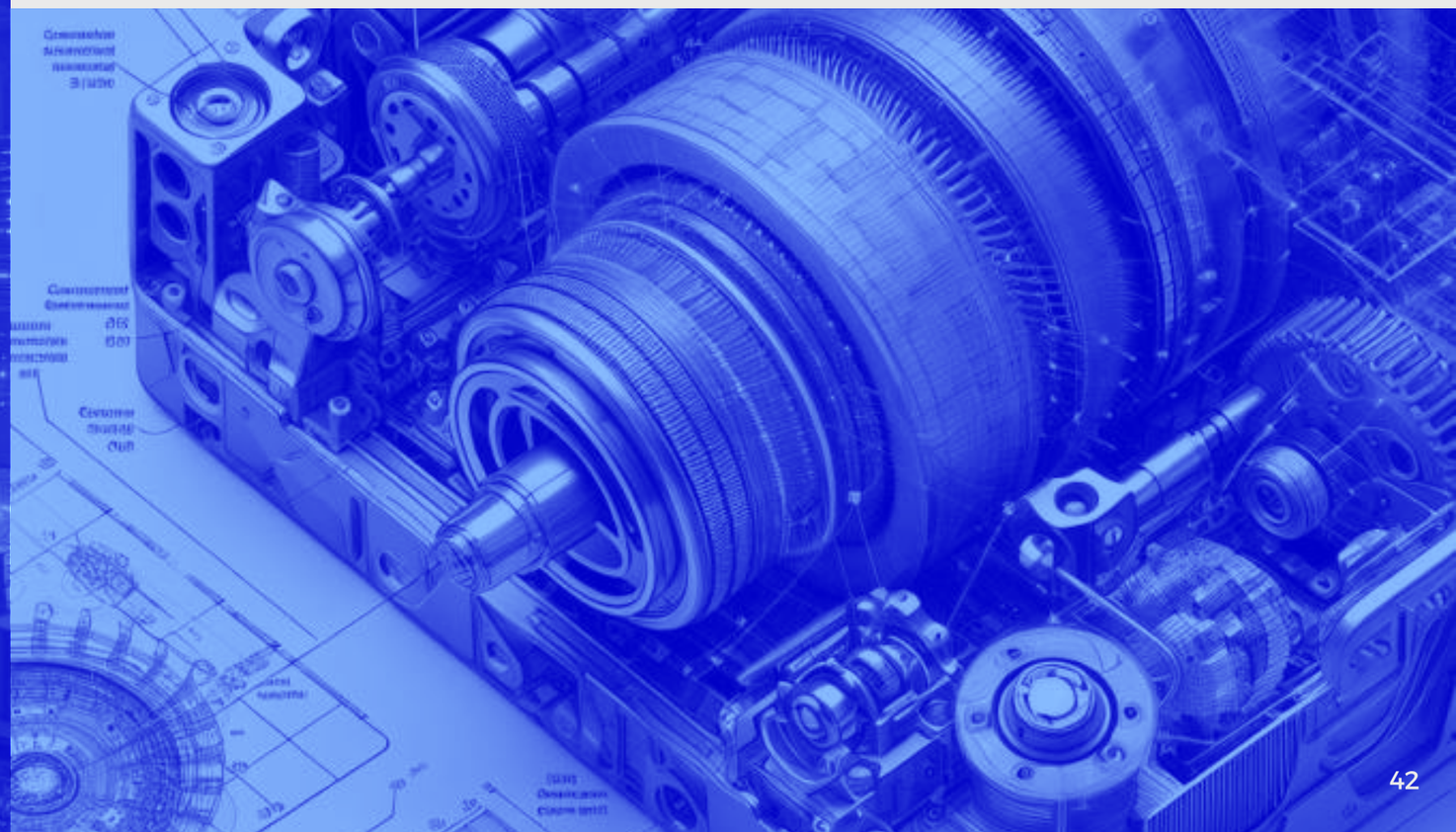

Safety

Ensures the highest levels of safety by partially or completely stopping the Machine in case of any malfunction and immediately displaying all issues.



Ability to purchase spare parts online (with ease)

The central system accesses the devices and suggests spare parts that need to be replaced in case of malfunctions or wear and tear. This service enables customers to review the parts and their alternatives and order them directly without the need to contact the company or search the website.



WashCloud
System



Stand out with our
proprietary system

www.washthru.com



Cloud storage

Cloud storage for machine data and reports

Predictive maintenance technology (for non-consumable parts)

Our centralized system utilizes various artificial intelligence tools to analyze the performance metrics of non-consumable parts. It deduces their estimated lifespans based on historical records and other criteria such as geographic location, temperature, humidity, water salinity, and more. This enables maintenance personnel (remotely) to identify all parts that need replacement, significantly ensuring the continuous operation of the Machine.





Automatic Reporting

Where the WashCloud system can automatically report any faults that may occur on the Machine without the need to report the fault, and the maintenance team deals with the report according to the size of the problem.

Application Programming Interface (API)

And it's an additional service for customers who have their own software, applications, or ERP systems and want to integrate them with the Machine systems. We customize solutions according to the customers' needs for a nominal fee, without any additional devices required for this feature.

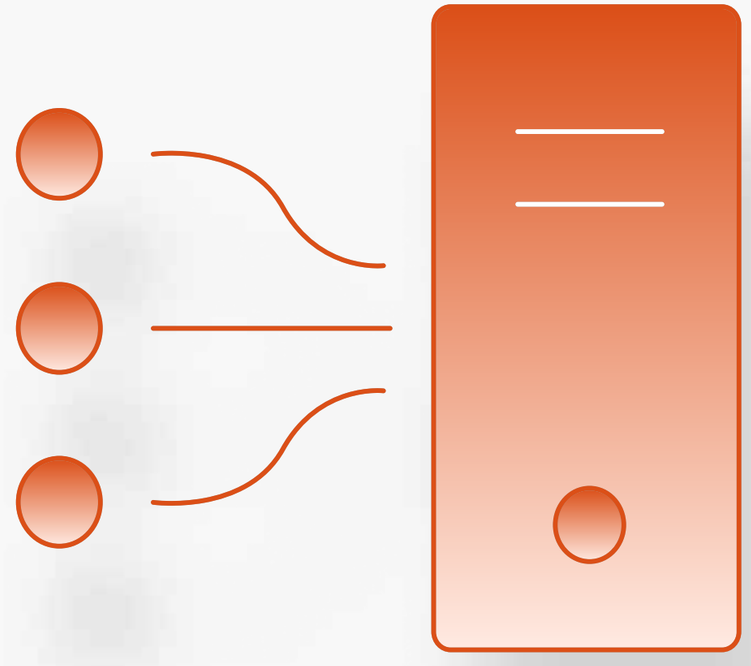

Continuous Update

Continuous Update for Machine Control Systems to Enhance Security and Improve Quality



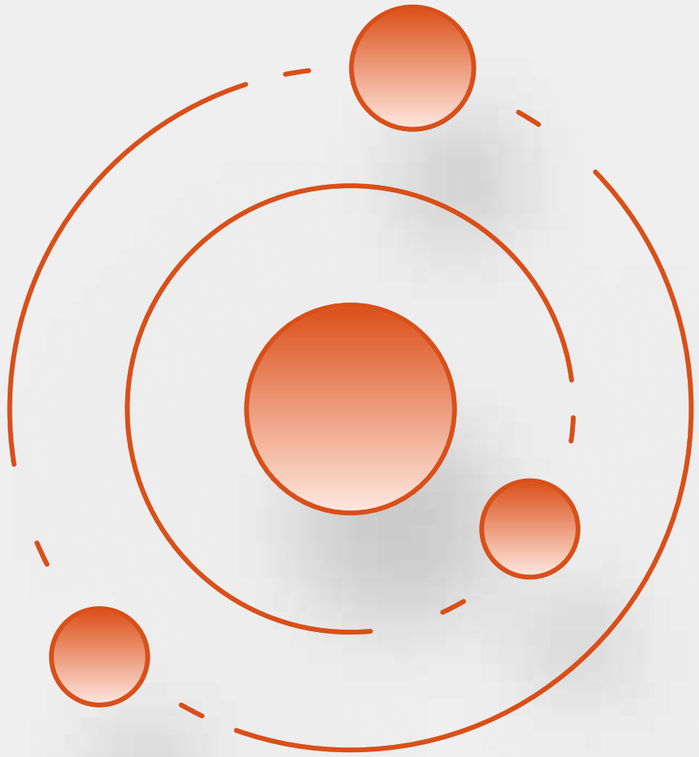

Automated Assistant System

And it's an extremely intelligent system that operates when there are any issues not directly recognized, presenting potential causes within seconds. This enables users to understand the reasons for malfunctions without the need to visit the site.

Reviewing troubleshooting solutions.

When human intervention is needed for repairs, this system provides solutions through visual clips. This enables technicians or operators to identify the required spare parts and access the optimal repair method.

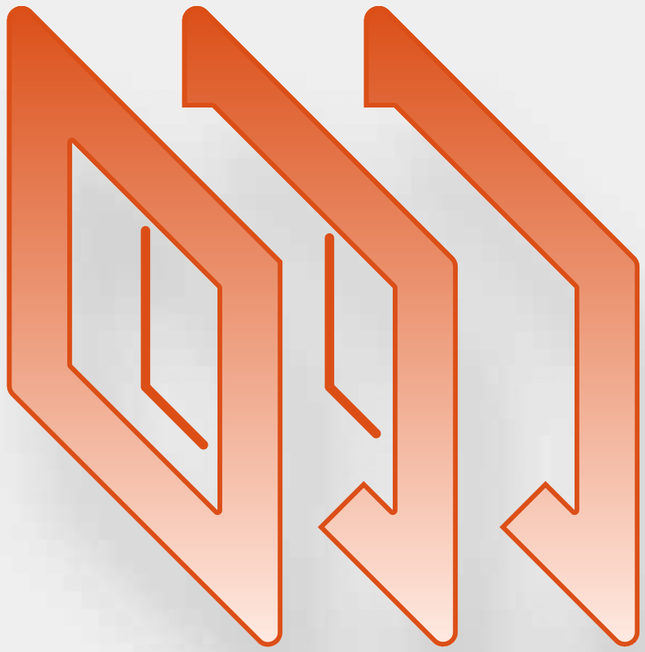

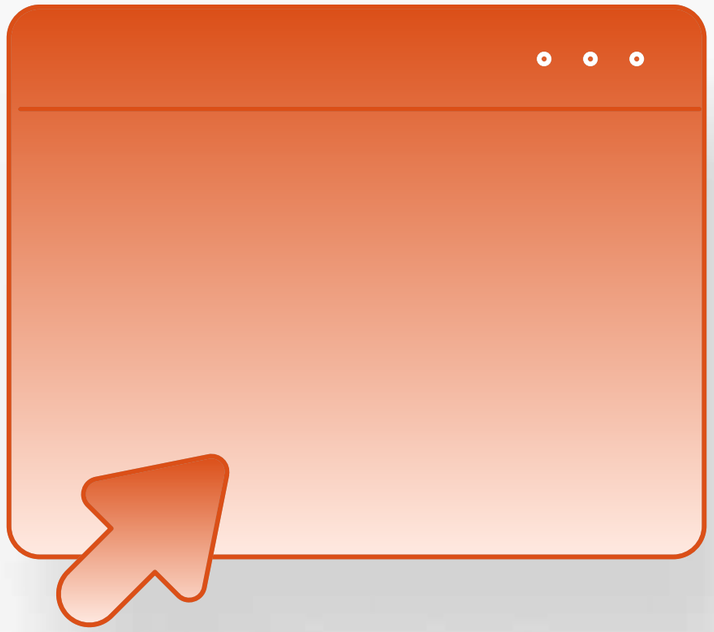

Automatic Alerts

Receiving customized SMS alerts, especially when there is a malfunction or when a component is nearing the end of its lifespan.

Remote control

The ability to access the Machine system remotely, enabling users to access a range of basic and advanced features using any electronic device (such as a smartphone or tablet) from anywhere in the world and at any time, while maintaining the highest security standards without being physically present at the device location.



Site dimensions

and foundation types

For more details, watch the video - (Scan the barcode) Or click here.

Upper installation

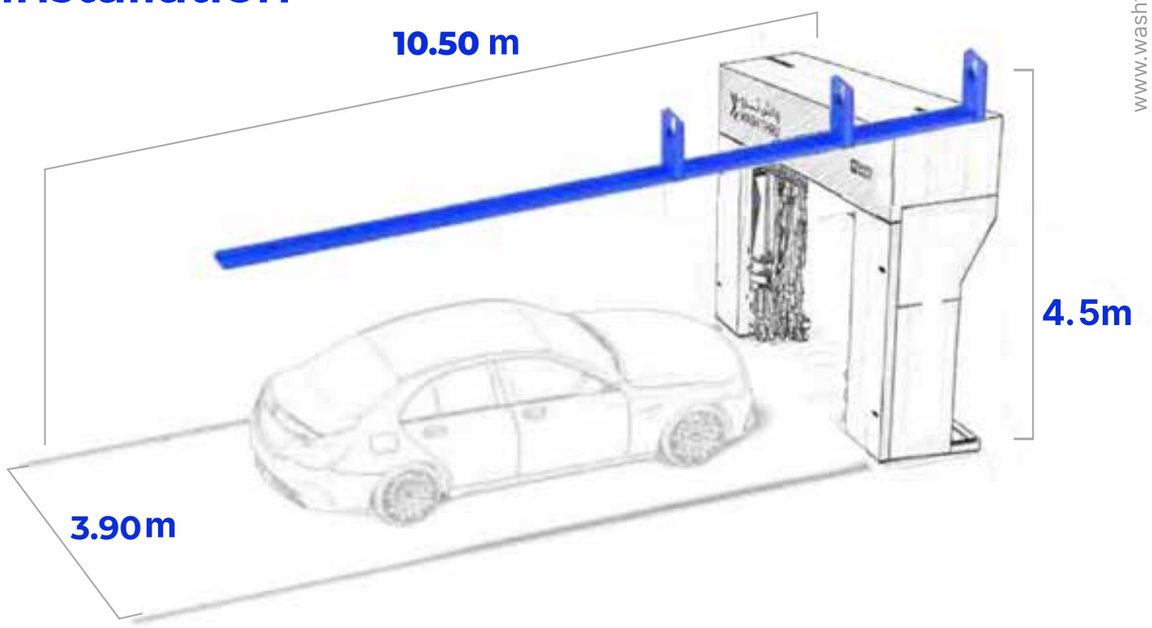

www.washthru.com

Ground installation

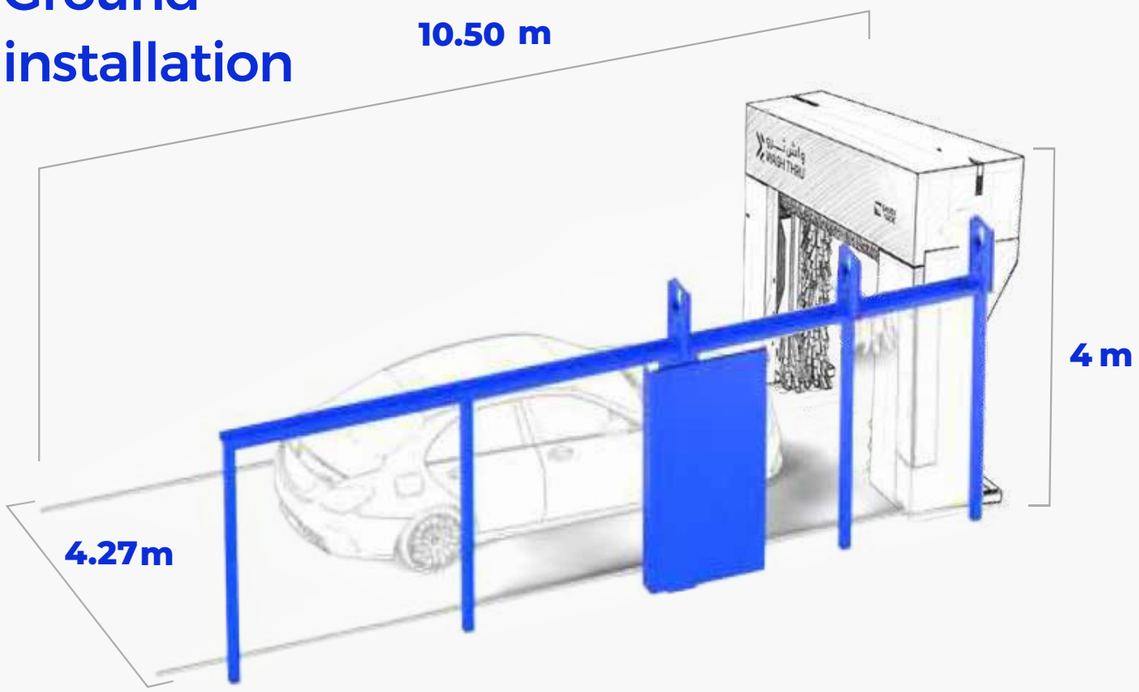

Suspended installation

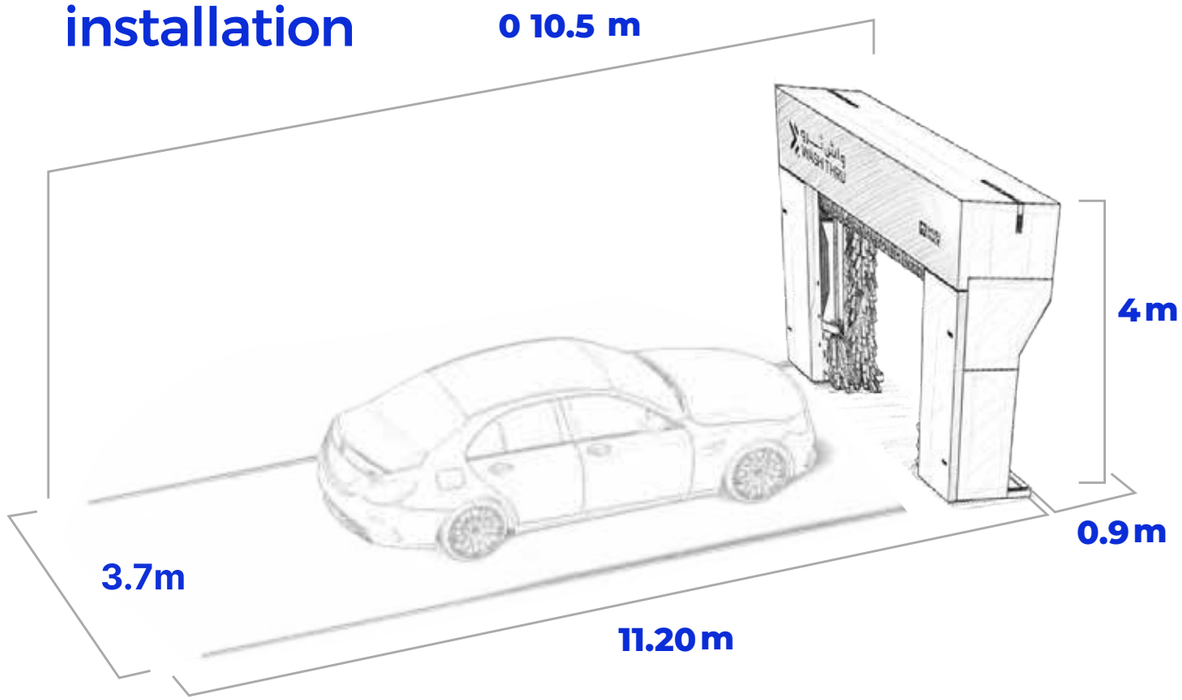

Safety Specifications

Our Machine features advanced technologies to maintain the highest safety and security standards.

- Pressure sensors for dry operation protection (digital and analog).
- Safety system for communication in case of backup failure via (SMS-WIFI-Cable).
- Overcurrent and undercurrent protection system.
- Monthly reports on replaceable parts, and it sends requests for the replacement of consumable parts.
- Stage sequence sensor for continuous safety in each stage.
- Dual protection system for top drying (Infrared sensors + Ultrasonic wave sensors) - for ultimate protection.
- A VPN-enabled routing device to achieve the highest levels of security for remote access to the machine using any electronic device (mobile or tablet) without being present at the machine's location.
- The protection system operates at each stage of the washing process.
- Continuous sensor design for all motion devices (open/close/lift/lower).



www.washthru.com

Success Partners

FAST car wash

DOUBLE Q دبل كيـــو

مغاسل رغوة الآلية AUTO FOAM CAR WASH

WASH WAY واش واي

W3 الغسيل الثلاثي

The Tunnel

هيف مغاسل سيارات أوتوماتيكية

express Auto Wash

إكستوكير extocare

CAR WASH مغسلة روز السعودية

WASH LINE واش لايـن

ROUNAQ

WASH PASS واش باس

درة للعناية بالسيارات

الماسة

كلين باودر CLEAN PAWDER

03 THREE MINUTES FOR CAR WASH

KING CAR كنج كار

LOCATION CAR WASH

مغسلة كاركافيز

BARRAQ CAR WASH

CLEANSPOT

الزغيبي Alzughaibi

HASLAH غسله

واش ترو
WASH THRU®

sales@washthru.com
www.washthru.com
+966 553 573 654
9 2 0 0 1 2 8 0 4
washthru

ميكاترونكس
Mechatronics

Version EN 1.0