Data sheet

Jupiter 500-850 fixed glass 2 sides

500-850 fixed glass 2 sides

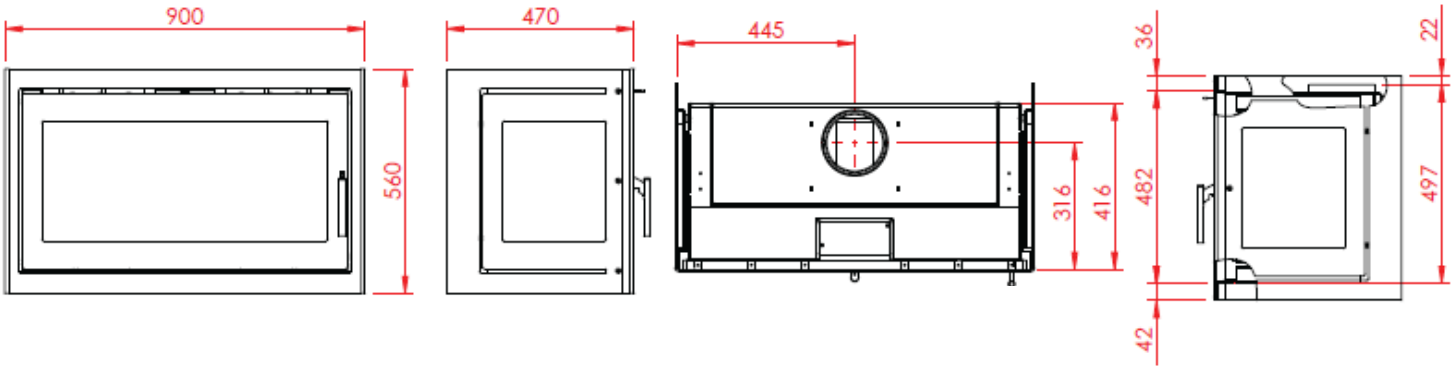

500-850 fixed glass 2 sides, airbox behind

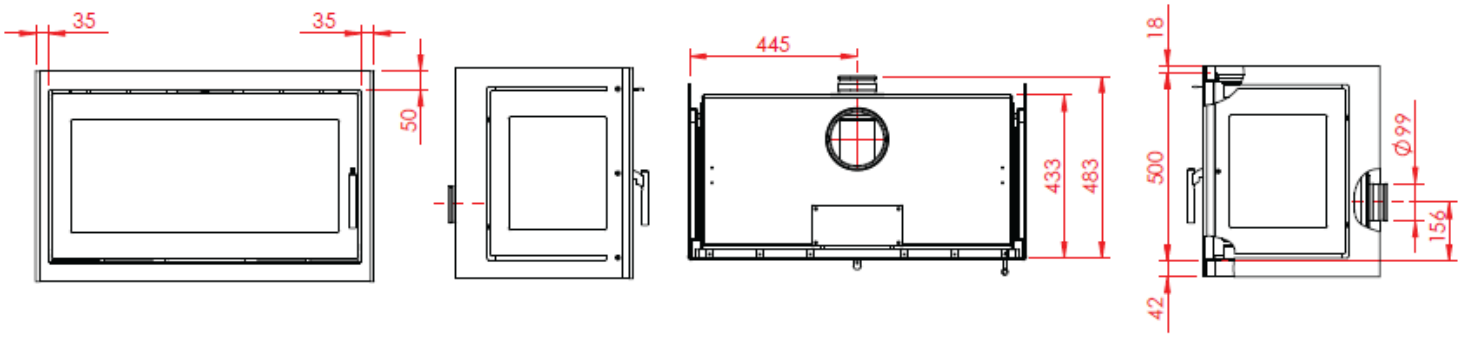

500-850 fixed glass 2 sides, airbox on top

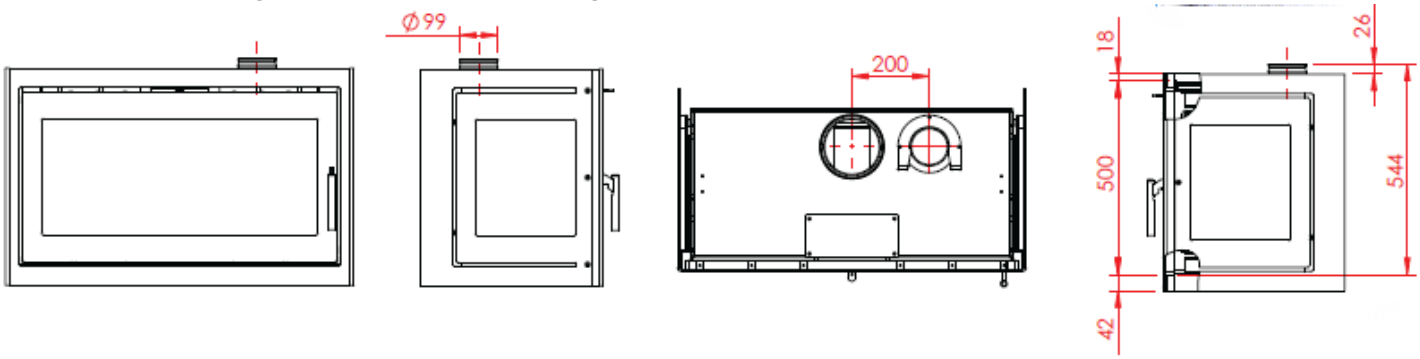

General Information

Manufacturer:	Meteor A/S, Drejervej 1, DK-7451 Sunds
Model:	Jupiter 500-850 fixed glass 2 sides fireplace insert for combustion with solid fuel
Identification code:	ELAB 2174

Fuel

Fuel type:	wood – suitable for combustion with kiln-dried firewood in accordance with the user manual
Recommended fuel load:	1,55 kg
Basic fire bed weight:	640 g
Suitable for:	intermittent operation – according to EN 16510 definition

Testing

Test report valid from:	14.11.2017
Tested according to:	EN 16510-1:2022 and EN 16510-2-2:2022, Tested by DTI in accordance with Regulation (EU) 2015/1186
Testing institute:	Danish Technological Institute (DTI), #1235
Declaration of Performance (DoP):	01.11.2025
DoP number	DoP-2174-2025-17

Dimensions and Weight

Weight	188 kg
External frame dimensions:	W900 x H560 X D470 mm
Door dimensions:	W813 x H439 mm

Performance Dataa

Energy efficiency class:	EEI 99, Class A
Nominal heat output:	6 kW
Heat to water:	N/A
Efficiency:	75 %
Seasonal efficiency:	65 %
Emisioner (normal operation, 13 % O_2)	CO: ≤ 1500 mg/Nm³ NOX: ≤ 200 mg/Nm³ OGC: ≤ 120 mgC/Nm³ PM: ≤ 40 mg/Nm³

Flue Connection

Flue outlet diameter:	150 mm
Flue outlet position:	top
Recommended chimney draught:	12 Pa
Flue gas temperature:	340° C
Flue gas mass flow:	7,1 g/s

Minimum Distance to Combustible Materials

bottom edge of door (dB'):	300 mm
floor in front (dF):	650 mm
ceiling (dC):	400 mm
side (dS):	400 mm
side in radiation zone (dL):	700 mm
furniture (dP):	1300 mm
furniture, side glass (dP):	650 mm
rear (dR):	0 mm

Ventilation

Type	B / BE
BE-version	can be connected to outdoor air via integrated spigot

CE **EN 16510-1:2022 / EN 16510-2-2:2022**	Typebetegnelse Type designation Désignation du type **Jupiter 500-850 fast glas 2 sider**	Nr. for ydeevnedeklaration Declaration of Performance No. Numéro de déclaration de performance **DoP-2174-2025-17**	Prøveinstitut Test agency Organisme d'essai **NB 1235**	Nominel effekt Rated effect Puissance nominale **6 kW**	Virkningsgrad Effciency Rendement **75 %**

Sæsonbetinget virkningsgrad Seasonal space heating energy efficiency Rendement énergétique saisonnier pour le chauffage des locaux	CO-emmision (13% O_2) CO CO	NOx NOx NOx	OGC OGC OGC	PM PM PM	Aftrækstemperatur Exhaust temperature Température des fumées
65%	**≤1500 mg/Nm³**	**≤200 mg/Nm³**	**≤120 mgC/Nm³**	**≤40 mg/m³**	**340 °C**

Sikkerhedsafstand til brandbart materiale: Se vejledning side 15 Clearance to flammable material: See the instructions page 15 Distance de sécurité aux matériaux combustibles : voir la notice page 15	Møbleringsafstand Minimum distance to furniture Distance minimale aux meubles	Minimum træk Min. flue draught Tirage minimal	Røggasmængde Flue gas mass flow Débit massique des fumées	Energieffektivitets indeks (EEI) Energy efficiency Indice d'efficacité énergétique (IEE)
	1300 mm	**12 Pa**	**7,1 g/s**	**99 (Klasse A)**

Anbefalet brændselstype / betegnelse Recommended fuel designation / designation Combustible recommandé / désignation	**Træ / I** **Wood logs /I** **Bois (bûches) /I**
Pejseindsats til fast brændsel Fireplace insert for solid fuel Insert de cheminée à combustible solide	
Læs og følg montage- samt brugsvejledning grundigt Read and follow the installation and operating instructions carefully Lire attentivement et respecter les instructions d'installation et d'utilisation	

Meteor fire space

Drejervej 1, DK-7451 Sunds
mail@hvm-meteor.dk
www.meteor.dk

Prod. no.
Product No. _____
N° de produit

ENERG Y IJA IE IA
енергия · ενεργεια

Meteor A/S

Jupiter 500-850 fast
sideglas 1/2 side(r)

A++
A+
A
B
C
D
E
F
G

A

6,0
kW

ENERGIA · ЕНЕРГИЯ · ΕΝΕΡΓΕΙΑ · ENERGIJA · ENERGY · ENERGIE · ENERGI

2015/1186