IN-LUX
Series

BINA COMPANY

Project:	Type:	Qty:



FEATURES

Premium outdoor in-ground spotlights meticulously crafted for high-end, luxury applications.

Available in five distinct sizes, each tailored to a specific power output for enhanced performance.

Versatile design options, including round (with or without bezel), square, and compatibility with various trim rings for maximum customization.

A wide range of optical options, including diffused, ring light, wall washer, and more, providing flexibility to suit any design need.

Superior material quality, robust structural integrity, and exceptional optical performance, making this series the perfect choice for upscale, architectural projects.

Order Code

Ordering: select options below; contact BINA to confirm the complete configuration.

SERIES	INSTALLATION	TRIM	APPLICATION	SIZE / WATTAGE	CCT
In-Lux	**IG** In-Ground **CM** Ceiling Mounted **WS** Window Sill Light **WM** Wall-Mounted	**RDT** Round Trimmed **RDL** Round Trimless **SQL** Square Trimless	**F** Fixed **A** Adjustable* **WW** Asymmetric/Wall Wash* **D** Diffused **CR** Concentric Rings** *Only Available in Sizes 64D, 80D, and 98D **Only Available in RDL & SQL	**45** 1.77"2W (120lm) **54** 2.13"3W (180lm) **64** 2.52"5W (300lm) **80** 3.15"7W (420lm)(Window sill 6W 300lm) **98** 3.86"9W (540lm)(Window sill 8W 480lm) *All luminous data above are based on the standard clear glass diffuser.	**27K** 2700K **30K** 3000K **35K** 3500K **40K** 4000K **D2W** 3000K-1800K **TW** 6500K-1800K **RGBW** ___specify W

BEAM ANGLE		CRI	OPTIONAL ACCESSORIES		
			Available in 45D, 64D, 98D Fixed Sizes Only	Available in 54 & 80D Fixed Sizes And all Adjustable Sizes	Available For All Asymmetric Sizes and Wall Mounted Sizes 45D, 54D&64D
5D	Asymmetric 5 Degree	**80** 80Ra	**HMB** Half Moon Blade	**LG** Lens&Grille	**HMA** Half Moon Silk Paint
15D	15 Degree Available only in 2.13"	**90** 90Ra	**HCL** Honeycomb Louver	**LC** Lens&Cylindrical Barrel	**VSL** Vertical Slot Silk Paint***
18D	18 Degree Not available in 1.77"/2.13"		**MRB** Concentric-Ring Blade	**LS** Lens&Shutters	*Only Available in Wall-Mounted Configuration
20D	Asymmetric 20 Degree		**TLB** Three-Leaf Blade		
24D	24 Degree Not available in 1.77"		**DCB** Double Crescent Blade		
25D	25 Degree Available only in 1.77"		**SCB** Single Crescent Blade		
36D	36 Degree Not available in 1.77"		**CB** Crescent Blade		
60D	60 Degree Not available in 1.77"				
2050D	20D×50D Available only in 1.77"				
2055D	20D×55D Available only in 3.15"/3.86"				
25D	25D×65D Available only in 3.15"/3.86"				
8100D	8DX100D WS98 Only				
12100D	12DX100D WS98 Only				
10110D	10DX110D WS80 Only				

INPUT VOLTAGE	IP RATING	DIMMING	FINISH	SLEEVE
12V 12V DC **24V** 24V DC	**67** IP67	**NON** Non Dim **ELV** Triac/ELV **D10** 0-10V **DALI** DALI **DMX** DMX512	**BK** Black **WH** White **GR** Gray **BR** Brown Available only in With Trimmed Brown **DG** Dark Gray Available only in Trimmed **GD** Golden Available only in Trimmed	Model A Model B

In an effort to offer the best product possible, we reserve the right to change product specifications or materials without notice .

info@binacompany.com
305.735.3114
www.binacompany.com

5 YEAR WARRANTY

Intertek

IN-LUX
Series

BINA COMPANY

Project:	Type:	Qty:

OPTIONAL OPTICAL ACCESSORIES


Half Moon Blade


Honeycomb Louver


Concentric-Ring Blade


Three-leaf Blade


Double Crescent Blade


Single Crescent Blade


Crescent Blade

OPTIONAL COVER FINISHES


Black


White


Gray


Brown


Dark Gray


Golden

INTERIOR ANTI-GLARE OPTIC ACCESSORIES


Lens & Grille


Lens & Cylindrical Barrel


Lens & Shutters

WALL RECESSED SERIES


HMA
Half Moon Silk Paint


VSL
Vertical Slot Silk Paint***


***Only available in wall mounted option

WINDOW SILL LIGHTS







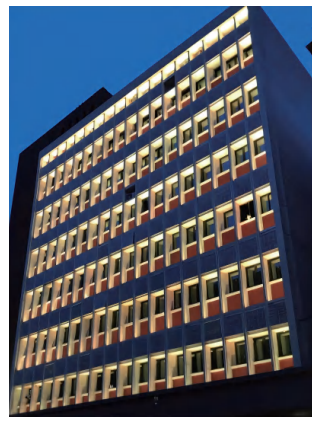
WINDOW-SILL APPLICATION


ASYMMETRIC OPTIC

info@binacompany.com
305.735.3114
www.binacompany.com

In an effort to offer the best product possible, we reserve the right to change product specifications or materials without notice.

IN-LUX
Series

BINA COMPANY

Project:	Type:	Qty:

DIMENSION DRAWINGS

ROUND TRIMLESS

45

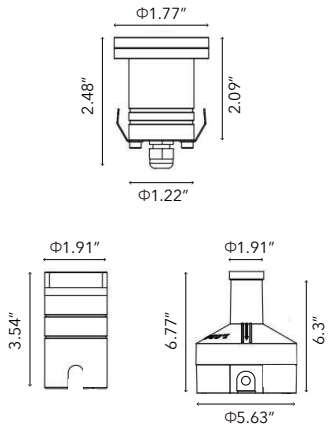

MODEL A MODEL B

54

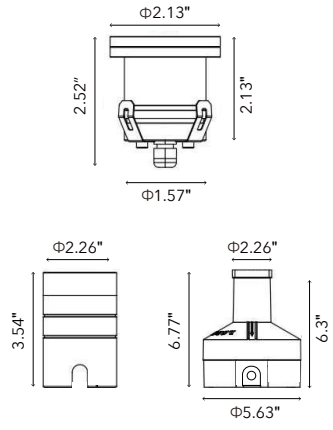

MODEL A MODEL B

64

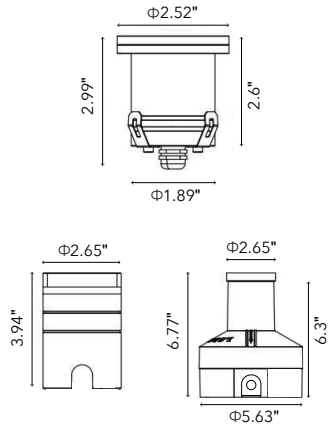

MODEL A MODEL B

80

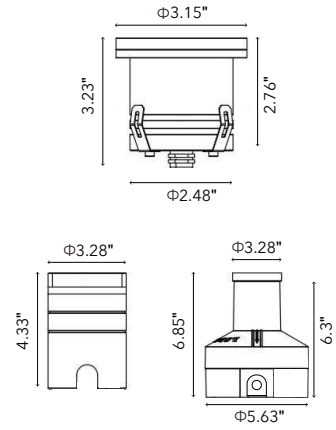

MODEL A MODEL B

98

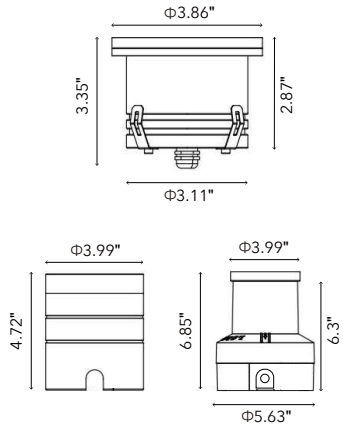

MODEL A MODEL B

ROUND TRIMMED

45

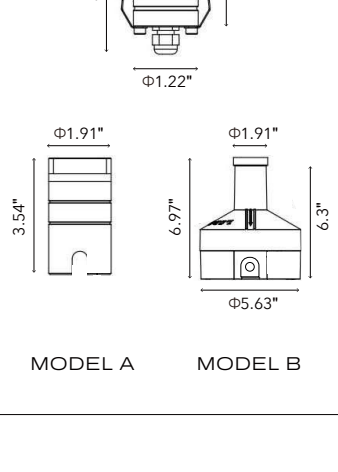

MODEL A MODEL B

54

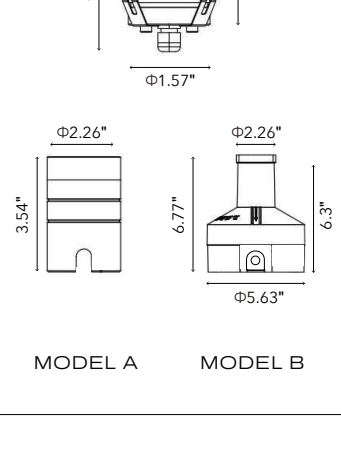

MODEL A MODEL B

64

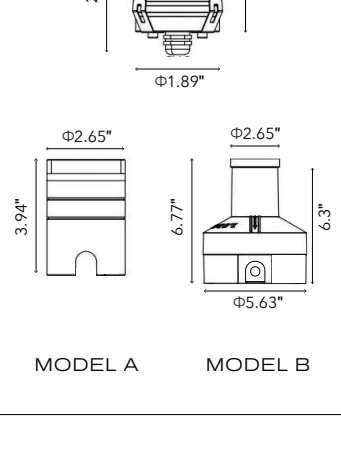

MODEL A MODEL B

80

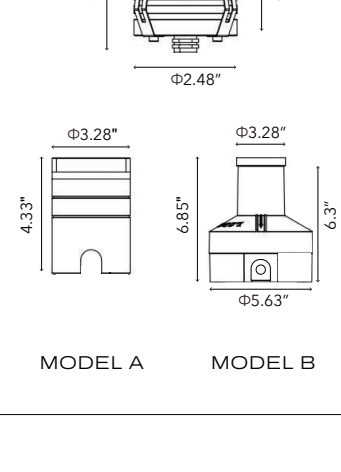

MODEL A MODEL B

98

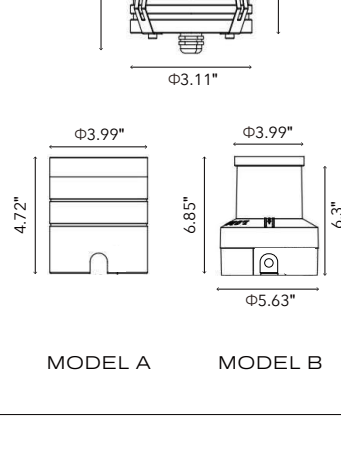

MODEL A MODEL B

SQUARE TRIMLESS

45

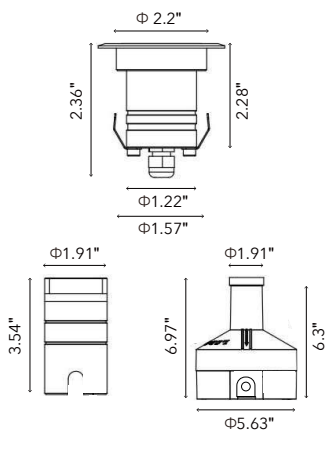

MODEL A MODEL B

54

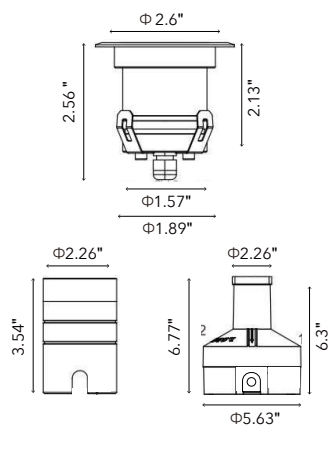

MODEL A MODEL B

64

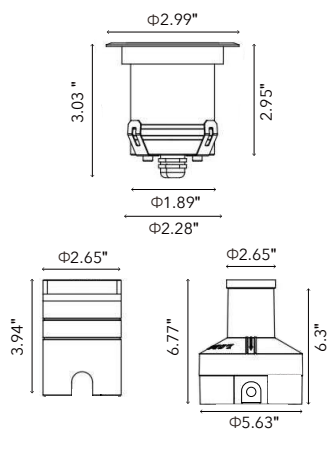

MODEL A MODEL B

80

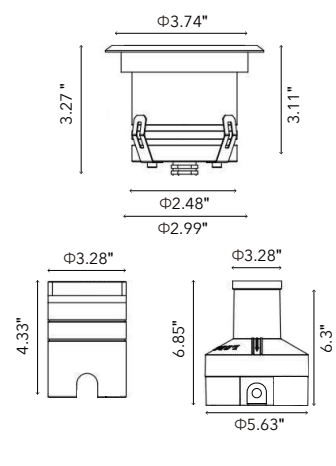

MODEL A MODEL B

98

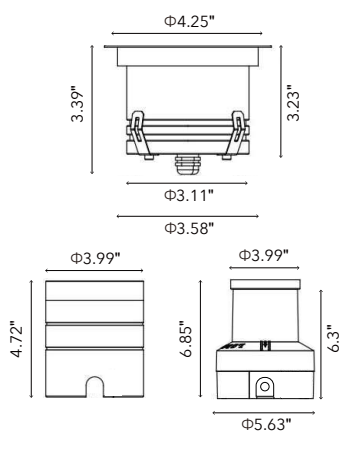

MODEL A MODEL B

In an effort to offer the best product possible, we reserve the right tochange product specifications or materials without notice.

info@binacompany.com
305.735.3114
www.binacompany.com

5 YEAR WARRANTY

Intertek

IN-LUX
Series

BINA COMPANY

Project:	Type:	Qty:

DIMENSION DRAWINGS

WINDOW-SILL LIGHTS

80

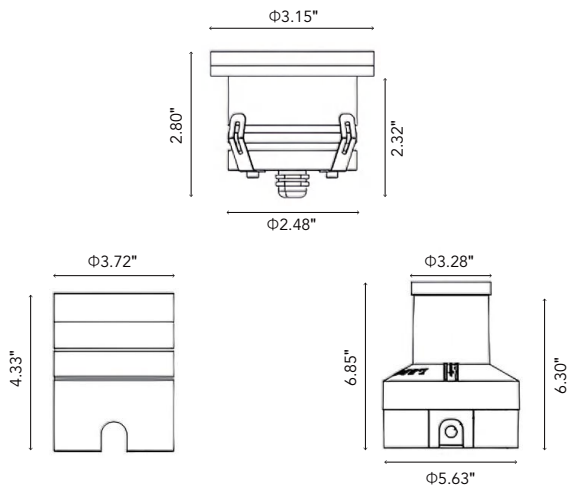

MODEL A MODEL B

98

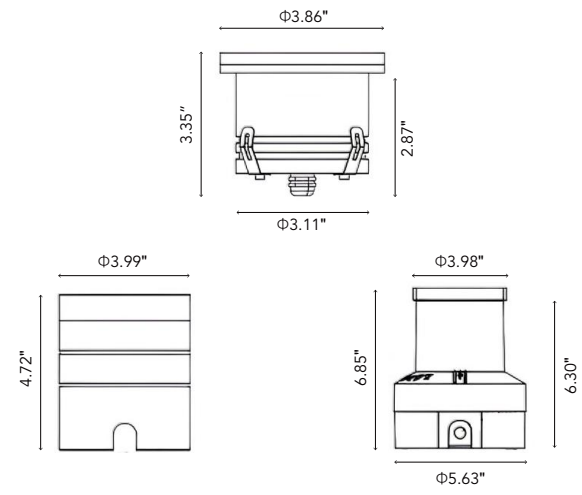

MODEL A MODEL B

In an effort to offer the best product possible, we reserve the right to change product specifications or materials without notice.

info@binacompany.com
305.735.3114
www.binacompany.com

5 YEAR WARRANTY

Intertek

IN-LUX
Series

BINA COMPANY

Project:	Type:	Qty:

INSTALLATION INSTRUCTIONS

STEP 1 ▶ Prior to installation, install the electrical wiring and prepare the mounting pit according to the dimensions of the embedded housing. Refer to the fixture drawing for detailed installation dimensions.

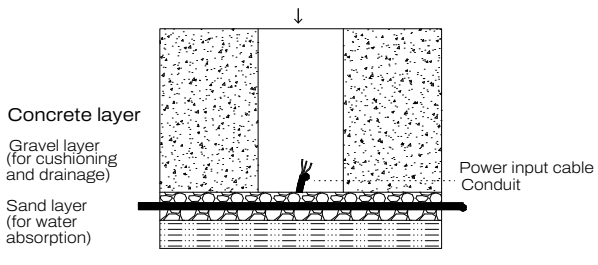

STEP 2 ▶ Position the embedded housing and ensure that its top surface is level with the finished ground surface.

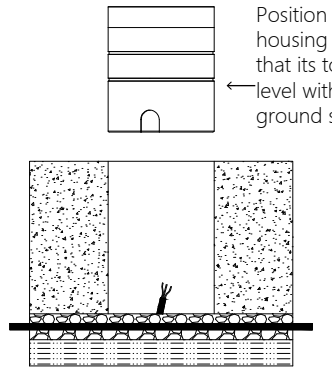

STEP 3 ▶ Properly connect the power cable to the fixture wires according to the wiring diagram. Tighten the waterproof connector securely to ensure a watertight seal.

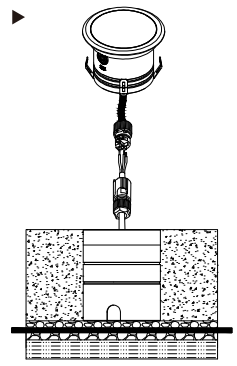

STEP 4 ▶ Adjust the fixture aiming direction with the provided tool to achieve the desired lighting effect. (For adjustable-angle fixtures only.)

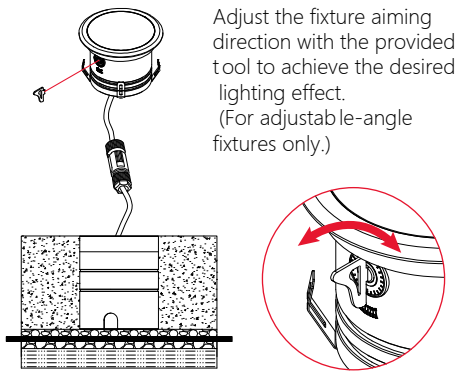

STEP 5 ▶ Install the fixture into the embedded housing after adjusting the beam angle (for adjustable-angle fixtures only). For fixed-angle fixtures, install the fixture directly into the housing.

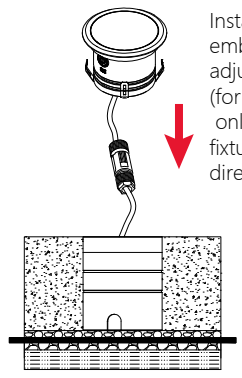

STEP 6 ▶ *Complete the installation*

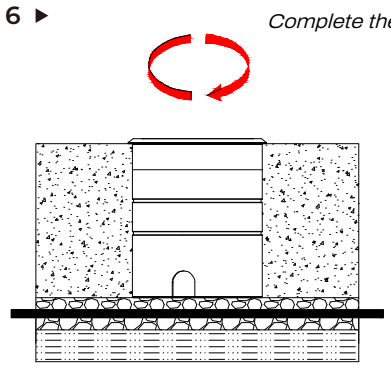

CONNECTION DIAGRAM

24VDC

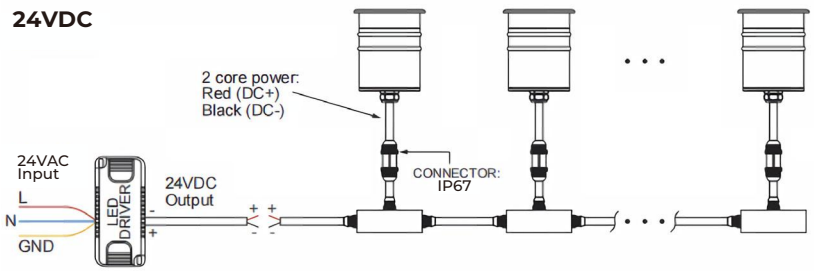

24VDC RGB

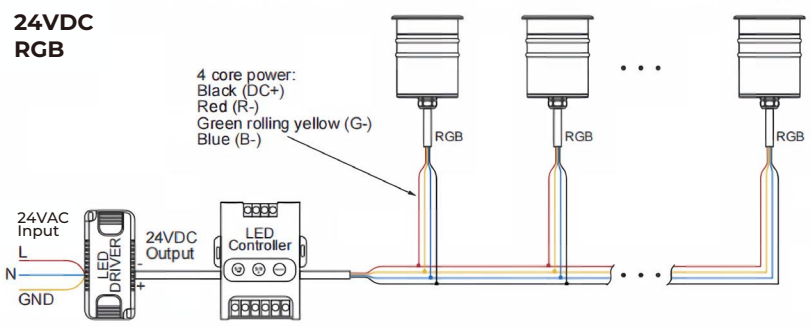

24VDC DMX512

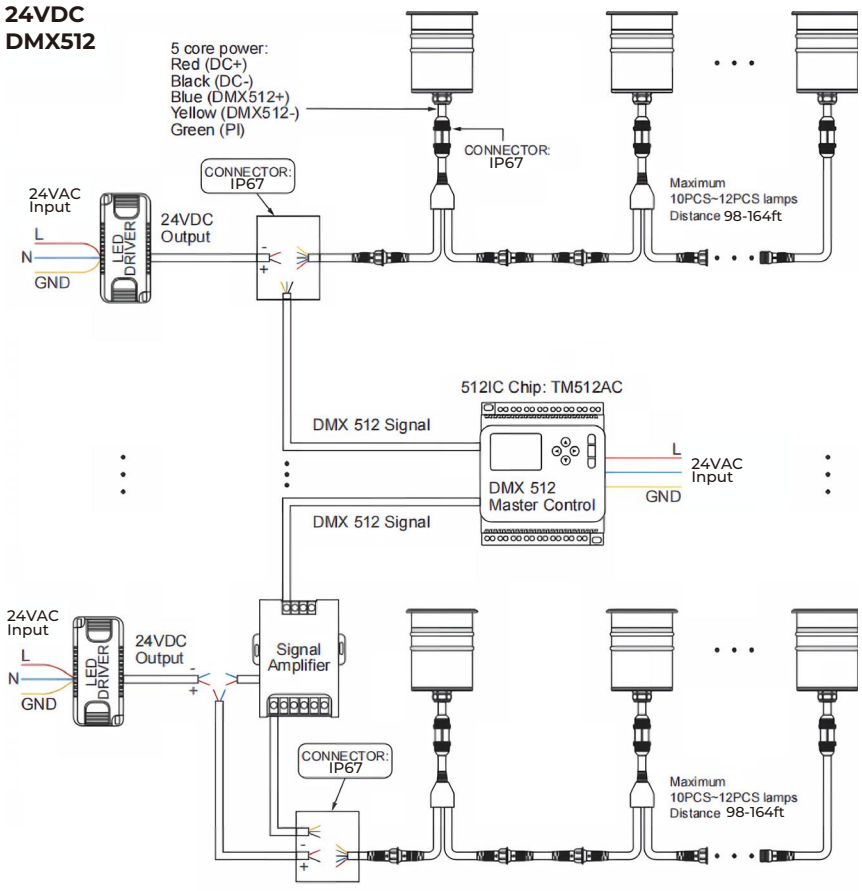

SAFETY INSTRUCTIONS BEFORE INSTALLATION

- Installation must be carried out by a qualified technician or authorized professional.
- Always disconnect power before installation to prevent the risk of electric shock.
- Ensure adequate ventilation space around the LED heat sink to allow proper cooling.
- Only connect LED luminaires using the recommended drivers.
- The actual product may vary slightly from the illustrations shown.
- Do not attempt to disassemble the product.
- Any damage caused by modifications or improper installation will void the warranty.

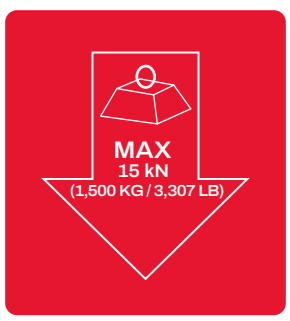

In an effort to offer the best product possible, we reserve the right to change product specifications or materials without notice.

info@binacompany.com
305.735.3114
www.binacompany.com

5 YEAR WARRANTY

Intertek