PROJECT: TYPE: QTY:

CH-LRG-S-3535

Features: Our largest channel profile line is perfect for applications where a robust channel can be accommodated. Pairs well with our wet rated LED product.

Mounting options: Direct Mount, Pendant Mount

Finish Options: Silver (SV), Black (BK), White (WH), with custom RAL finishes available upon request.

Lens Options: Clear, Frosted, Diffused.

SPECIFICATIONS

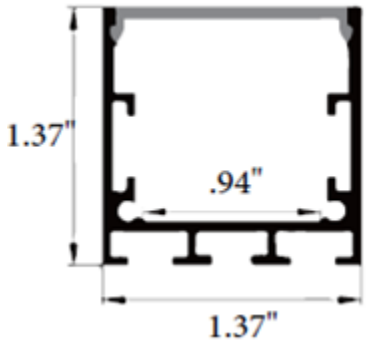



Ordering Code:

Series	Finish		Mounting		Lens		Channel Length	
CH-LRG-S-3535	**SV**	Silver	**DM**	Direct Mount	**CL**	Clear	**UC**	Uncut (98.43")
	BK	Black	**PT**	Pendant Mount	**FR**	Frosted	**CT**	Cut (2"-98.43")
	WH	White			**DF**	Diffused		
	RAL#	Custom Finish						

Ordering Code Example: CH-LRG-S-3535-SV-DM-CL-UC

info@binacompany.com | 305.735.3114 | www.binacompany.com

In an effort to offer the best product possible, we reserve the right to change specification or material of the product without notice.