DRAFTING LEADER'S GUIDE TO **SG-006: RULES FOR THE STRUCTURE AND DRAFTING OF AUSTRALIAN STANDARDS**

Copyright © 2016 Standards Australia, all rights reserved
Uncontrolled if printed

Introduction

Purpose and introduction

Purpose

This abridged Guide summarises rules for the structure and drafting of Australian Standards and joint Australian/New Zealand Standards, Interim Standards and Technical Specifications as described in detail in Standardisation Guide 006 (SG-006). These rules may be applied to Miscellaneous Publications, Technical Reports and Handbooks. The purpose of this abridged version of SG-006 is to assist, as a quick reference, drafting leads and drafting teams in their standard writing.

Introduction

This Guide states the general principles by which Standards Australia's documents are drafted and stipulates the rules for drafting documents to ensure that they are clear, precise and unambiguous.

Referenced documents

Refer to SG-006.

Terms and definitions

For terms and definitions that apply to drafting rules, refer to SG-006.

Elements of a document

3.2.1

conditional element

element that is present depending on the provisions of the particular document

3.2.2

informative element

element intended to assist the understanding or use of the document or provides contextual information about its content, background or relationship with other documents

3.2.3

mandatory element

element that has to be present in a document

3.2.4

normative element

element that describes the scope of the document or sets out provisions

3.2.5

optional element

element which the writer of a document may choose to include or not

Copyright © 2016 Standards Australia, all rights reserved
Uncontrolled if printed

Provisions

3.3.1
capability

expression in the content of a document conveying the ability, fitness, or quality necessary to do or achieve a specified thing

Note 1 to entry: Capability is expressed using the verbal forms specified in Table 7. 3.3.2

3.3.2

external constraint

constraint or obligation on the user of the document, typically due to one or more legal requirements or laws of nature, that is not stated as a provision of the standard

Note 1 to entry: External constraints are referred to using the verbal form specified in Table 8.

Note 2 to entry: Use of the word “must” does not imply that the external constraint referred to is a requirement of the document.

3.3.3

permission

expression in the content of a document conveying consent or liberty (or opportunity) to do something

Note 1 to entry: Permissions are expressed using the verbal forms specified in Table 6.

3.3.4

possibility

expression in the content of a document conveying expected or conceivable material, physical or causal outcome

Note 1 to entry: Possibility is expressed using the verbal forms specified in Table 7.

3.3.5

provision

expression in the content of a normative document that takes the form of a statement, an instruction, a recommendation or a requirement

Note 1 to entry: These forms of provision are distinguished by the type of wording they use; for example, instructions are expressed in the imperative mood, recommendations by the use of the auxiliary “should” and requirements by the use of the auxiliary “shall”.

[SOURCE: ISO/IEC Guide 2:2004, 7.1]

3.3.6

recommendation

expression in the content of a document conveying a suggested possible choice or course of action deemed to be particularly suitable without necessarily mentioning or excluding others

Note 1 to entry: Recommendations are expressed using the verbal forms specified in Table 5.

Note 2 to entry: In the negative form, a recommendation is the expression that a suggested possible choice or course of action is not preferred but it is not prohibited.

Copyright © 2016 Standards Australia, all rights reserved
Uncontrolled if printed

3.3.7

requirement

expression in the content of a document conveying objectively verifiable criteria to be fulfilled and from which no deviation is permitted if conformance with the document is to be claimed

Note 1 to entry: Requirements are expressed using the verbal forms specified in Table 4.

3.3.8

statement

expression in the content of a document conveying information

Note 1 to entry: Table 6 specifies the verbal forms for indicating a course of action permissible within the limits of the document. Table 7 specifies the verbal forms to be used for statements of possibility and capability.

Verbal forms

3.4.1

may

indicates the existence of a permission

3.4.2

shall

indicates that a statement is mandatory

3.4.3

should

indicates a recommendation

Other

3.5.1

comply

to fulfil a legal obligation

3.5.2

conform

to fulfil the requirements of a normative document

Copyright © 2016 Standards Australia, all rights reserved
Uncontrolled if printed

General Principles

Objective of standardization

The objective of documents is to specify clear and unambiguous provisions in order to help trade and communication. For more information, refer to SG-006. A document does not in itself impose any obligation upon anyone to follow it. However, an obligation can be imposed, for example, by legislation or by a contract which makes reference to the document.

A document shall not include contractual requirements (e.g. concerning claims, guarantees, covering of expenses) and legal or statutory requirements.

Principles

Planning and preparation

The rules given in the Standardisation Guides shall be applied throughout all stages of the development of documents.

The following shall be determined before drafting begins:

(a) the intended structure;

(b) any interrelationships; and

(c) the organization and subdivision of the subject matter (see Section 6).

In the case of a multipart document, a list of the intended parts should be drawn up (preferably including their titles and scopes).

Performance principle

Whenever possible, requirements shall be expressed in terms of performance rather than design or descriptive characteristics.

When the performance principle is adopted, care shall be taken to ensure that important features are not inadvertently omitted from the performance requirements.

If it is impossible to determine the necessary performance characteristics, the material or product may be specified. However, in such a case the following phrase should be included "… or any other material or product proved to be equally suitable.".

Requirements concerning the manufacturing process shall usually be omitted in favour of tests to be made on the final product. There are, nevertheless, some fields in which reference to the manufacturing process is needed (e.g. hot rolling, extrusion) or even in which an inspection of the manufacturing process is necessary (e.g. pressure vessels).

However, the choice between specifying by description or by performance needs consideration because specification by performance can lead to complicated, costly and lengthy testing procedures.

Verifiability

Requirements shall be objectively verifiable. Only those requirements which can be verified shall be included.

Phrases such as "sufficiently strong" or "of adequate strength" shall not be used because they are subjective statements.

The stability, reliability or lifetime of a product shall not be specified if no test method is known which can verify the claim in a reasonably short time. A guarantee by the manufacturer is not a substitute for such

Copyright © 2016 Standards Australia, all rights reserved
Uncontrolled if printed

requirements. Guarantee conditions shall not be included, because they are a commercial or contractual concept, not technical.

Consistency

Consistency should be maintained within each document, and within a series of associated documents:

(a) The structure of associated documents and the numbering of their clauses should, as far as possible, be identical.

(b) Identical wording should be used to express identical provisions.

(c) The same terminology should be used throughout. The use of synonyms should be avoided.

Avoidance of duplication and unnecessary deviations

Documents should avoid duplication. This is particularly important in test methods which are often applicable to more than one product, or type of product.

Accommodation of more than one product size

If the aim of a document is standardization of a single size for a product, but there is more than one widely accepted size in international use, a committee may decide to include alternative product sizes in the document. However, in such cases, every effort shall be made to reduce the number of alternatives to a minimum, taking the following points into account:

When agreed by the committee and approved by PMG, a transitional period may be indicated during which the use of non-preferred values is permitted.

Aim-oriented approach

Not all characteristics of an item or a subject can be or need to be standardized. The choice of characteristics to be standardized depends on the aims of the document (e.g. health, safety, protection of the environment, interface, interchangeability, compatibility or interworking, and variety control). A functional analysis of the product can help to identify the characteristics to be included in the document.

Characteristics not specified in a document

In some cases, a document may list characteristics which can be chosen freely by the supplier. This approach is not acceptable in the case of health and safety requirements.

Documents listing characteristics for which suppliers or purchasers are required to state values or other data not specified by the document shall specify how such values are to be measured and stated.

Adopted text documents

Refer to SG-006.

Accessibility

In accordance with the provisions of the Disability Discrimination Act 1992 (refer to the Federal Register of Legislation) and to meet the requirements of the Web Content Accessibility Guidelines (WCAG) 2.0 Level AA, all normative information within a document shall be described in words, even where tables, formulas, and figures are also included.

Gender responsiveness and diversity

All documents shall reflect the understanding of physical differences and gender roles and equally address the needs of women and men.

Copyright © 2016 Standards Australia, all rights reserved
Uncontrolled if printed

NOTE Refer to the UNECE's Guidelines on Developing Gender-Responsive Standards.

All documents shall recognise and address First Nations People including the different experiences of age, race, culture and level of education.

NOTE For general guidance, refer to AS ISO 30415: Human resource management - Diversity and inclusion.

Sustainability

In the development of a document, all experts shall include consideration of sustainability in their technical work, either directly (where they specifically address sustainability issues) or indirectly (e.g., where they relate to testing, products, procedures, services, terminology, management systems or auditing).

NOTE Refer to ISO Guide 82: Guidelines for addressing sustainability in Standards.

Organization and subdivision of the subject matter

Names of the main subdivisions

The terms which shall be used to designate the divisions and subdivisions of subject matter are given in Table 1.

Table 1 — Names of divisions and subdivisions

Term	**Example of numbering** **Multi-section document**	**Example of numbering** **Single section document**
Part	12345.1	12345.1
Section	Section 1	not used
Clause	1.1	1
Subclause	1.1.1	1.1
Subclause	1.1.1.1	1.1.1
Paragraph	not numbered	not numbered
Appendix	A	A
Clause (in Appendix)	A.1	A.1

Subdivision into documents

Refer to SG-006.

Such subdivision has the advantage that each part can be revised separately as necessary.

In particular, the aspects of a product which will be of separate interest to different parties (e.g. manufacturers, certification bodies, legislative bodies or other users) shall be clearly distinguished, preferably as parts of a document or as individual documents.

Subdivision of the subject matter within a series of parts

For more information, refer to SG-006.

Subdivision of the subject matter within an individual document.

Copyright © 2016 Standards Australia, all rights reserved
Uncontrolled if printed

Sections

A section is a clause or group of clauses with a common purpose. Multi-section documents shall comprise two or more sections. Section one shall comprise the normative general clauses, i.e. Scope and Normative references, and normative technical clauses, such as Terms and Definitions, which apply to the whole document.

The sections in each document shall be numbered with Arabic numerals beginning with 1. The numbering shall be continuous up to but excluding any appendix.

Each section shall have a title.

Arrangement of a single section document

An example of a typical arrangement in a single section document is given in Table 2.

Table 2 — Overview of the major subdivisions of a single section document (including Adoptions) and their arrangement in the text

Major subdivision	Mandatory/Optional/ Conditional
Title	Mandatory
Preface	Mandatory
Foreword	Optional/ Conditional[a]
Introduction	Optional/ Conditional
Scope	Mandatory
Normative references	Mandatory[b]
Terms and definitions	Mandatory
Symbols and abbreviated terms	Conditional
Technical content	Mandatory/Optional/Conditional
Annexes	Conditional/Optional[c]
Appendices	Optional
Bibliography	Conditional
Index	Optional

[a] Adoptions may contain both a national Preface and the Foreword of the adopted text.

[b] When no normative references or terms are listed, use the introductory texts provided in Clause 15.5.

[c] Annexes are used in ISO and IEC documents and are included in adopted texts only.

Multi-section documents

Documents may be subdivided into Sections. An example of a typical arrangement in a multi-section document is given in Table 3.

Copyright © 2016 Standards Australia, all rights reserved
Uncontrolled if printed

Table 3 — Overview of the major subdivisions of a multi-section document and their arrangement in the text

Major subdivision	Mandatory/Optional/ Conditional
Title	Mandatory
Preface	Mandatory
Introduction	Optional/ Conditional
Section 1 Scope and General	Mandatory
Scope	Mandatory
Normative references	Mandatory[a]
Terms and definitions	Mandatory
Symbols and abbreviated terms	Conditional
Section 2 and following	Mandatory
Technical content divided into Sections	Mandatory/Optional/Conditional
Appendices	Optional
Bibliography	Conditional
Index	Optional
[a] When no normative references or terms are listed, use the introductory texts provided in Clause 15.5.	

Verbal forms for expressions of provisions

General

Users of the document need to be able to identify the requirements they are obliged to satisfy in order to claim compliance with a document. The user also needs to be able to distinguish these requirements from other types of provision where there is a choice (i.e., recommendations, permissions, possibilities and capabilities).

It is essential to follow rules for the use of verbal forms so that a clear distinction can be made between requirements, recommendations, permissions, possibilities and capabilities.

The first column of Tables 4 to 8 shows the preferred verbal form to be used to express each type of provision.

Only singular forms are shown in Tables 4 to 8.

Requirement

The verbal forms shown in Table 4 shall be used to express requirements. They shall not be used in the same sentence as the word “should”. They shall not appear in an informative element of the document; this includes footnotes and notes to text and informative tables, figures and appendices.

Copyright © 2016 Standards Australia, all rights reserved
Uncontrolled if printed

Table 4 — Requirement

Verbal form	Meaning
shall	is to is required to is required that has to only … is permitted it is necessary
shall not	is not allowed (permitted) (acceptable) (permissible) is required to be not is required that … be not is not to be do not
Do not use “must” as an alternative for “shall”. (This will avoid any confusion between the requirements of a document and external constraints – see Clause 7.6). Do not use “may not” instead of “shall not” to express a prohibition.	

Recommendation

The verbal forms shown in Table 5 shall be used to express recommendations.

Table 5 — Recommendation

Verbal form	Meaning
should	it is recommended that ought to
should not	it is not recommended that ought not to

Permission

The verbal forms shown in Table 6 shall be used to express permission.

Copyright © 2016 Standards Australia, all rights reserved
Uncontrolled if printed

Table 6 — Permission

Verbal form	Meaning
may	is permitted is allowed is permissible
may not	it is not required that no ... is required
Do not use “possible” or “impossible” in this context. Do not use “can” instead of “may” in this context. Do not use “might” instead of “may” in this context. “May” signifies permission expressed by the document, whereas “can” refers to the ability of a user of the document or to a possibility open to him/her.	

Possibility and capability

The verbal forms shown in Table 7 shall be used to express possibility and capability.

Table 7 — Possibility and capability

Verbal form	Meaning
can	be able to there is a possibility of it is possible to
cannot	be unable to there is no possibility of it is not possible to
Do not use “may” instead of “can” in this context. “May” signifies permission expressed by the document, whereas “can” refers to the ability of a user of the document or to a possibility open to him/her.	

Copyright © 2016 Standards Australia, all rights reserved
Uncontrolled if printed

External constraint

External constraints are not requirements of the document. They are given for the information of the user.

The verbal form shown in Table 8 shall be used to indicate constraints or obligations defined outside of the document.

Table 8 — External constraint

Verbal form
Must
Do not use “must” as an alternative for “shall”.

Language, spelling, abbreviated terms, style and basic reference works

Spelling and reference works

The reference work for spelling is The Macquarie Dictionary: https://www.macquariedictionary.com.au/ .

NOTE Where spelling variants are made in the dictionary, *choose* the first listed in the entry.

For words for which there is an alternative “s” or “z” spelling (e.g. organize, standardization), the “z” spelling shall be used if that spelling is offered as an alternative in the *Macquarie Dictionary*.

Spelling and abbreviation of names of organizations

The names of organizations, and their abbreviations, shall be written as used by those organizations, in English.

Abbreviated terms

The use of abbreviated terms shall be consistent throughout the document.

If a list of abbreviated terms is not given in the document (see Clause 17), then the first time that an abbreviated term is used, the full term shall be given with the abbreviated term following in brackets.

Any abbreviated term should be in upper case letters, without a full-stop after each letter.

Linguistic style

To help users understand and use the document correctly, the linguistic style shall be as simple and concise as possible.

Numbers, quantities, units and values

Representation of numbers and numerical values

To express values of physical quantities, Arabic numerals followed by the international symbol for the unit shall be used (refer to ISO 80000, IEC 80000 and IEC 60027).

If the magnitude (absolute value) of a number less than 1 is written in decimal form, the decimal sign shall be preceded by a zero. The decimal point shall be indicated with a full point.

Copyright © 2016 Standards Australia, all rights reserved
Uncontrolled if printed

Each group of three digits shall be separated by a space from the preceding digits. This also applies to digits following the decimal sign. This does not apply to binary and hexadecimal numbers, numbers designating years or the numbering of Standards.

EXAMPLE 2

23 456 2 345 2.345 2.345 6 2.345 67 but the year 2011

The multiplication symbol (×) shall be used to indicate the multiplication of numbers and numerical values written in decimal form, in vector products and in cartesian products.

EXAMPLE 3

A = 80 mm × 25 mm

EXAMPLE 4

l = 2.5 × 103 m

EXAMPLE 5

$\vec{I}_G = \vec{I}_1 \times \vec{I}_2$

Values, dimensions and tolerances

General

Values and dimensions shall be indicated as being minimum or maximum. Their tolerances (if applicable) shall be specified in an unambiguous manner.

Copyright © 2016 Standards Australia, all rights reserved
Uncontrolled if printed

EXAMPLE 1

80 mm × 25 mm × 50 mm (not 80 × 25 × 50 mm)

EXAMPLE 2

80 μF ± 2 μF or (80 ± 2) μF

EXAMPLE 3

λ = 220 × (1 ± 0.02) W/(m · K)

EXAMPLE 4

80^{+2}_{0} (not 80^{+2}_{-0})

EXAMPLE 5

$80\ \mathrm{mm}^{+50}_{-25}\ \mu\mathrm{m}$

EXAMPLE 6

10 kPa to 12 kPa (not 10 to 12 kPa or 10 – 12 kPa)

EXAMPLE 7

0 °C to 10 °C (not 0 to 10 °C or 0 – 10 °C)

In order to avoid misunderstanding, tolerances on values expressed in percent shall be expressed in a mathematically correct form.

EXAMPLE 8

Write “from 63 % to 67 %” to express a range.

EXAMPLE 9

Write “(65 ± 2) %” to express a centre value with tolerance.

The form “65 ± 2 %” shall not be used.

The degree should be divided decimally.

EXAMPLE 10

Write 17.25° rather than 17°15′.

Any value or dimension that is mentioned for information only shall be clearly distinguishable from requirements.

Copyright © 2016 Standards Australia, all rights reserved
Uncontrolled if printed

For information on limiting values and selected values, refer to SG-006.

Quantities, units, symbols and signs

The International System of units (SI) as set out in ISO 80000 and IEC 80000 shall be used.

The units in which any values are expressed shall be indicated.

The unit symbols for degree, minute and second for plane angle shall immediately follow the numerical value; all other unit symbols shall be preceded by a space.

Symbols for quantities shall be chosen, wherever possible, from the various parts of IEC 60027, ISO 80000 and IEC 80000.

Language-specific abbreviated terms such as ppm should not be used if possible. If it is necessary to use language-specific abbreviated terms such as ppm, their meaning shall be explained.

Referencing

Purpose or rationale

References to particular pieces of text should be used instead of repetition of the original source material.

References can be made:

(a) to other parts of the document (e.g. a clause, table or figure, see Clause 10.6); or

(b) to other documents or publications (see Clause 10.2).

References can be:

(a) informative (see Clause 21); or

(b) normative (see Clause 15).

References can be:

(a) dated (see Clause 10.5); or

(b) undated (see Clause 10.4).

EXAMPLE 1

It is often useful to copy relevant terminological entries into the terms and definitions clause in which case the source is cited:

3.1
asset
item, thing or entity that has potential or actual value to an organization

[SOURCE: ISO 55500:2014, 3.2.1]

Copyright © 2016 Standards Australia, all rights reserved
Uncontrolled if printed

EXAMPLE 2

Material copied from an external document:

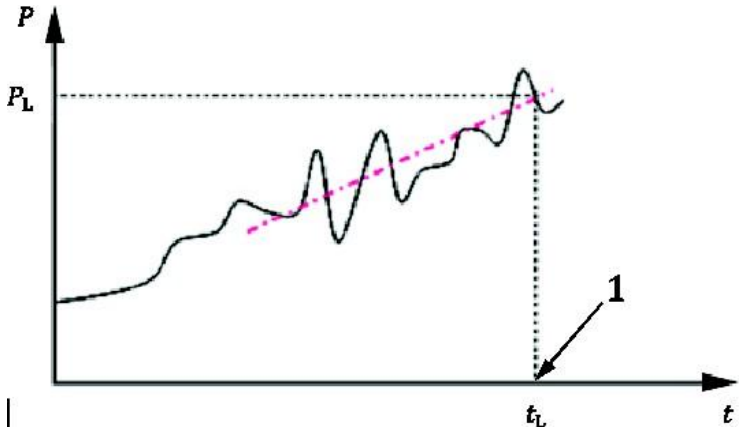

Key

1 life; maintenance time

[SOURCE: DISSADO, L.A., FOTHERGILL, J.C., *Electrical Degradation and Breakdown in Polymers*, Peter Peregrins, London, 1992, reproduced with the permission of the authors.]

Figure A.6 — Property versus time behaviour, detection of threshold (end point, P_L) and maintenance time

Copyright permissions shall be sought for the reproduction of any material which is not owned or already licensed by Standards Australia.

Permitted referenced documents

Normatively referenced documents shall be documents published by Standards Australia or other standards development organisations, or regional or international standards development organisations such as ISO and/or IEC. In the absence of appropriate documents published by these organisations, those published by other bodies may be listed as normative references. Informative reference may be made to any other type of document. Informative references shall be listed in the bibliography.

Refer to SG-006 for further referencing information.

NOTE It is possible to refer to a withdrawn standard so long as it meets the above criteria and no current replacement is available, or the use of a withdrawn standard is necessary for the maintenance of equipment built to that document.

Copyright © 2016 Standards Australia, all rights reserved
Uncontrolled if printed

Presentation of references

EXAMPLE 1

AS 1074, *Steel tubes and tubulars for ordinary service*

AS 1281, *Cement mortar lining of steel pipes and fittings*

AS 4118 (all parts), *Fire sprinkler systems*

AS 4428.6, *Fire detection, warning, control and intercom systems, Part 6: Control and indicating equipment—Alarm signalling equipment*

AS/NZS 3013, *Electrical installations—Classification of the fire and mechanical performance of wiring system elements*

AS/NZS 3500.1, *Plumbing and drainage*, *Part 1: Water services*

ISO 14044:2006, *Environmental management — Life cycle assessment — Requirements and guidelines*

ISO 17101-2:2012, *Agricultural machinery — Thrown-object test and acceptance criteria — Part 2: Flail mowers*

ISO 14617 (all parts), *Graphical symbols for diagrams*

ISO/IEC 17025:2005, *General requirements for the competence of testing and calibration laboratories*

IEC 61175, *Industrial systems, installations and equipment and industrial products — Designation of signals*

SA HB 19.31:2018, *Reference materials, Part 31: Contents of certificates, labels and accompanying documentation*

ISO/TR 12353-3:2013, *Road vehicles — Traffic accident analysis — Part 3: Guidelines for the interpretation of recorded crash pulse data to determine impact severity*

For other referenced documents and information resources (printed, electronic or otherwise), the style as presented in ISO 690 is a guide only.

EXAMPLE 2

Book or monograph:

AYMARD M. Dutch Capitalism and World Capitalism. In: *Studies in Modern Capitalism*, (AYMARD M., ed.). Cambridge University Press, 1982

HALL J.R. *Intrinsic Safety in British Coal Mines*. Marylebone Press, 1985

HARRISON H.B. *Structural Analysis and Design*. Pergamon Press, Second Edition, 1990 INTERNET ENGINEERING TASK FORCE (IETF). *Intellectual Property Rights in IETF Technology*, (BRADNER S., ed.). 2005. http://www.ietf.org/rfc/rfc3979.txt

Website or webpage reference:

ASTM INTERNATIONAL. *Standardization News*. https://www.astm.org/standardization-news IEEE.

https://www.ieee.org

Copyright © 2016 Standards Australia, all rights reserved
Uncontrolled if printed

Journal article:

AMAJOR, L.C. The Cenomanian hiatus in the Southern Benue Trough, Nigeria. *Geological Magazine*. 1985, **122**(1), 39-50

BRADFORD M.A. Inelastic Local Buckling of Fabricated I-Beams. *J. Constuct. Steel Res*. 1987, **7**(5) pp. 317–334

DAVISON G.W. Three Phase Transformers — Past, Present Future. *Engineering Review*. 2001, **6** pp. 71–75

SCALLY G., AND DONALDSON L.J. Clinical governance and the drive for quality improvement in the new NHS in England. *British Medical Journal*. 1998, **317** pp. 61–65. https://www.bmj.com/content/317/7150/61

Report:

AUSTRALIAN LAW REFORM COMMISSION. *Guardianship*. Report No. 141, 2016

Handbook:

COLUMN RESEARCH COMMITTEE OF JAPAN. *Handbook of Structural Stability*. Corona, 1971

Thesis:

RUSSELL J. *Australian Limit State Design Rules for the Stability of Steel Structures*. Sydney University, Thesis, 2017

Conference:

MARCER J.R. *Design Aspects Significantly Affecting Rating and Fatigue Life of Railway Underbridges*. Asia Pacific Conference on Bridge Loading and Fatigue, Monash University, 1996

Legislation:

Trade Practices Act 1974 (Cth)

Work Health and Safety Regulation 2017 (NSW)

Building Act 2004 (NZ)

Undated references

Undated references may be made:

(a) only to a complete document;

(b) if it will be possible to use all future changes of the referenced document for the purposes of the referring document; and

(c) when it is understood that the reference will include all amendments to and revisions of the referenced document.

Dated references

Dated references are references to:

(a) a specific edition, indicated by the date of publication; or
(b) a specific enquiry or final draft, indicated by a dash.

Copyright © 2016 Standards Australia, all rights reserved
Uncontrolled if printed

For dated references, each shall be given with its year of publication.

If the referenced document is amended or revised, the dated references to it will need to be reviewed to assess whether they should be updated or not.

In this context a part is regarded as a separate document.

Within the text, references to specific clauses or subclauses, tables and figures of a referenced document shall always be dated, because subsequent editions could result in the renumbering of such elements within the referenced document.

In the text, use the standard identifier rather than the title when referring to an Australian or Joint Australian or New Zealand, ISO or IEC publication. The titles are usually only written out in full in the normative references clause and in the bibliography.

In the text, use the following forms to make dated references to a document.

EXAMPLE 1	
… perform the tests given in IEC 60068-1:1988 … … in accordance with ISO 1234:–[2] Clause 3 … ------	Dated reference to a published document
… Under revision. Stage at the time of publication: ISO/DIS 1234:2014.	Dated reference to an enquiry or final draft
… as specified in IEC 64321-4:1996 Table 1 …	Dated reference to a specific table in another published document
… use symbol IEC 60417-5017:2002-10…	Dated reference to an entry within a database standard
… according to IEC 62271-1:2007/AMD1:2011 …	Dated reference to an amendment (using IEC conventions)
EXAMPLE 2	
Dated versus undated references:	
The test methods of IEC 61300-2-2 shall be used.	This is a reference to a complete document, and it is therefore undated
The dimensions shall be in accordance with IEC 60793-2-50:2012 Table B.1.	This is a reference to a specific element in the referenced document, and it is therefore dated

Copyright © 2016 Standards Australia, all rights reserved
Uncontrolled if printed

References in a document to itself

References shall not be made to page numbers, since pagination can change if the referenced document is published in different formats, or if the document is revised.

For an individual document, use the form “this document”.

For a document published in separate parts, the Standard identifier followed by the phrase “(all parts)” shall be used to refer to the entire series.

EXAMPLE

The formulae in ISO 10300 (all parts) are intended to establish uniformly acceptable methods for calculating the pitting resistance and bending strength of…

Such undated references are understood to include all amendments and revisions to the referenced document.

References to elements of text

Cross references to elements of text in the same document should be in the form of the following examples:

EXAMPLE 1

“In accordance with Section 3”.

“According to Clause 3.1”.

“As specified in Item 3.1(b)”.

“Details as given in Clause 3.1.1”.

“See Appendix B”.

“The requirements given in Clause B2”.

“See the Note in Table 2”.

“See Clause 6.6.3 Example 2”.

“See Clause 3.1 Equation 3”.

NOTE "See" is used for cross references internal to the document, "Refer to" to other documents outside the document itself.

The term “subclause” shall not be used.

If there is a need to refer to an unordered list item in another document, the following formulation shall be used:

EXAMPLE 2

“as specified in ISO/IEC 15888:1996 Clause 3.1 second list item”.

Copyright © 2016 Standards Australia, all rights reserved
Uncontrolled if printed

Subdivisions of the document

Title

Purpose or rationale

The title is a clear, concise description of the subject matter covered by the document. Any necessary additional details are given in the scope.

Normative or informative?

The title is a normative element.

Mandatory, conditional or optional?

The title is a mandatory element.

Numbering and subdivision

The title of a part shall be composed in the same way. All the individual titles in a series of parts shall contain the same introductory element (if present) and main element, while the complementary element shall be different in each case in order to distinguish the parts from one another. The complementary element shall be preceded in each case by the designation "Part …:".

EXAMPLE 3

IEC 60947-1, *Low-voltage switchgear and controlgear — Part 1: General rules*

IEC 60947-2, *Low-voltage switchgear and controlgear — Part 2: Circuit-breakers*

Specific principles and rules

Avoidance of unintentional limitation of the scope

The title shall not contain details that could imply an unintentional limitation of the scope of the document.

Wording

Refer to SG-006.

Preface

Purpose or rationale

The Preface informs the user about:

(a) whether the document is an Australian/New Zealand Standard or Australian Standard
(b) the organization responsible for publishing the document;
(c) the committee which developed the document;
(d) the change of the document from an Australian/New Zealand Standard to an Australian Standard or the reverse;
(e) relationships between the present document and other documents, including a statement if this document supersedes another in whole or in part;

Copyright © 2016 Standards Australia, all rights reserved
Uncontrolled if printed

(f) the objective of the document;
(g) principle differences between the new and old edition;
(h) the details of any exemptions to Standards Australia's Standardisation Guides granted by the Standards Development and Accreditation Committee (SDAC);
(i) the nature of particular text features such as commentary text; and
(j) legal disclaimers.

It shall not contain background information on the subject area; this material belongs in an Introduction (see Clause 13). Refer to SG-006, Appendix E, for further details for Prefaces where the publication is an adoption.

Normative or informative?

The Preface shall not contain requirements, permissions or recommendations.

Mandatory, conditional or optional?

The Preface is a mandatory element.

Numbering and subdivision

The Preface shall not be numbered and shall not be subdivided.

Specific principles and rules

Refer to SG-006.

Introduction

Purpose or rationale

The introduction provides specific information or commentary about the technical content of the document, and about the reasons prompting its preparation.

Normative or informative?

The introduction shall not contain requirements.

Mandatory, conditional or optional?

The introduction is an optional element.

Numbering and subdivision

The introduction shall not be numbered.

Specific principles and rules

Whenever alternative solutions are offered in a document and preferences for the different alternatives provided, the reasons for the preferences shall be explained in the introduction. Where patent rights have been identified in a document, the introduction shall include an appropriate notice.

Scope

Purpose or rationale

The scope clearly defines the subject of the document, and the aspects covered.

If necessary, the scope can indicate subjects that are excluded from the document.

Copyright © 2016 Standards Australia, all rights reserved
Uncontrolled if printed

EXAMPLE

This document excludes ….

In documents that are subdivided into parts, the scope of each part shall define the subject of that part of the document only.

The scope shall be succinct.

Normative or informative?

The scope is a normative element. It shall not contain requirements, permissions or recommendations.

Mandatory, conditional or optional?

The scope is a mandatory element.

Numbering and subdivision

The scope may be subdivided; however, this is not normally necessary.

Specific principles and rules

The scope shall only appear once in each single section document and shall be worded as a series of statements of fact.

Forms of expression such as the following shall be used.

EXAMPLES

This document {or this section}

(a) specifies the dimensions of …

(b) specifies a method of …

(c) specifies the characteristics of ...

(d) establishes a system for ...

(e) establishes general principles for ...

(f) gives guidelines for ...

(g) defines terms ...

Statements of applicability of the document shall be introduced by wording such as:

EXAMPLES

This document applies to …

This document does not apply to…

Copyright © 2016 Standards Australia, all rights reserved
Uncontrolled if printed

Normative references

Purpose or rationale

The normative references clause lists, for information, those documents which are cited in the text in such a way that some or all of their content constitutes requirements of the document.

Normative or informative?

The normative references do not contain requirements.

The list of references it contains is given for the convenience of the user, who can then consult the place where they are cited in the document to understand and assess how they apply.

Mandatory, conditional or optional?

The normative references clause is a mandatory element, even if it contains no normative references.

Numbering and subdivision

The normative references clause shall not be subdivided.

Referenced documents listed are not numbered.

Specific principles and rules

General

The Normative references clause shall only appear once in each document.

Introductory wording

The normative references shall be introduced by the following wording:

> The following documents are referred to in the text in such a way that some or all of their content constitutes requirements of this document.
>
> NOTE Documents referenced for informative purposes are listed in the Bibliography.

The note above is optional.

> For dated references, only the edition cited applies. For undated references, the latest edition of the referenced document (including any amendments) applies.

If no references exist, include the following phrase below the clause title:

> There are no normative references in this document.

Referencing

Only references cited in the text in such a way that some or all of their content constitutes requirements of the document shall be listed in the Normative references clause.

Table 4 provides the verbal forms and expressions that make a citation normative.

When citing other documents, avoid using potentially ambiguous expressions, where it is unclear whether a requirement or a recommendation is being expressed. For example, the expressions "see …" and "refer to …" should only be used informatively.

Copyright © 2016 Standards Australia, all rights reserved
Uncontrolled if printed

EXAMPLE 2

In the following cases, the references are informative.

For additional information on communication, refer to ISO 14063.

Referenced documents shall be listed in numerical order, in the following sequence:

(a) Australian Standards.

(b) Australian/New Zealand Standards.

(c) IEC and ISO Standards.

(d) EN Standards.

(e) Other national Standards in alphabetical order.

(f) Industry Standards.

(g) Non-Standards documents.

Terms and definitions

Purpose or rationale

The terms and definitions clause provides definitions necessary for the understanding of certain terms used in the document.

If necessary, terminological entries can be supplemented by information (including requirements) given in the notes to entry.

EXAMPLE

3.6

moisture content

loss of mass determined by the procedure described in this document

Note 1 to entry: The moisture content is expressed as a percentage by mass.

Normative or informative?

The terms and definitions clause is a normative element. It defines the way in which the listed terms shall be interpreted.

Mandatory, conditional or optional?

The terms and definitions clause is a mandatory element, even if it contains no terminological entries.

Copyright © 2016 Standards Australia, all rights reserved
Uncontrolled if printed

Numbering and subdivision

Terminological entries shall be numbered.

NOTE These numbers are not considered as subclause numbers.

EXAMPLE 1

3 Terms and definitions

For the purposes of this document, the following terms and definitions apply.

NOTE ISO and IEC maintain terminological databases for use in standardization at the following addresses:

(a) IEC Electropedia: available at http://www.electropedia.org/

(b) ISO Online browsing platform: available at http://www.iso.org/obp

3.1

management performance indicator

MPI

environmental performance indicator that provides information about the management efforts to influence an organization's environmental performance

[SOURCE: ISO 14031:1999, 2.10.1]

Subdivision of the terms and definitions clause is permitted. Terms and definitions should be listed alphabetically.

EXAMPLE 2

3 Terms and definitions

[…]

3.2 Surface properties

3.2.1

abrasion

loss of material from a surface due to frictional forces

[…]

3.5 Optical properties

[…]

3.5.8

colour retention

degree of permanence of a colour

Note 1 to entry: Colour retention can be influenced by weathering.

Copyright © 2016 Standards Australia, all rights reserved
Uncontrolled if printed

For convenience, the symbols and abbreviated terms may be combined with the terms and definitions in order to bring together terms and their definitions, symbols and abbreviated terms under an appropriate composite title, for EXAMPLE “Terms, definitions, symbols and abbreviated terms”.

Specific principles and rules

General

The Terms and definitions clause shall only appear once in each document.

Rules for the development of terminological entries

Only terms which are used in the document shall be listed in the terms and definitions clause. This rule does not apply to terminology standards, whose terms are intended for wider use.

Terms

Terms shall be written in lower case characters. Upper case characters, mathematical symbols, typographical signs and syntactic signs (e.g. punctuation marks, hyphens, parentheses, square brackets and other connectors or delimiters) as well as their character styles (i.e. fonts and bold, italic, bold italic, or other style conventions) shall be used in a term only if they constitute part of the normal written form of the term.

Definitions

The definition shall be written in such a form that it can replace the term in its context. It shall not start with an article (“the”, “a”) nor end with a full stop. A definition shall not take the form of, or contain, a requirement. Only one definition per terminological entry is allowed. If a term is used to define more than one concept, a separate terminological entry shall be created for each concept and the domain shall be included in angle brackets before the definition.

EXAMPLE

2.1.17

die

<extrusion> metal block with a shaped orifice through which plastic material is extruded

2.1.18

die

<moulding> assembly of parts enclosing the cavity from which the moulding takes its form

Notes to entry

Notes to entry follow different rules from notes integrated in the text (see Clause 25). They provide additional information that supplements the terminological data, for example:

(a) provisions (statements, instructions, recommendations or requirements) relating to the use of a term;

(b) information regarding the units applicable to a quantity; or

(c) an explanation of the reasons for selecting an abbreviated form as preferred term.

Notes to entry are designated “Note # to entry:” and shall be numbered starting with “1” within each terminological entry. A single note to entry shall be numbered.

Copyright © 2016 Standards Australia, all rights reserved
Uncontrolled if printed

EXAMPLE

3.1.4

continuous scale

scale with a continuum of possible values

EXAMPLE Interval scale and ratio scale.

Note 1 to entry: A continuous scale can be transformed into a discrete scale, by grouping “values”. This inevitably leads to some loss of information. Often the resulting discrete scale will be ordinal.

Note 2 to entry: Scale resolution can be adversely affected by measurement system limitations. Such measurement limitations can, sometimes, give rise to measurements being represented on a discrete, ordinal, scale.

[SOURCE: ISO 3534-2:2006, 1.1.4]

EXAMPLE 2

3.6

moisture content mass by volume

mass of evaporable water divided by volume of dry material

Note 1 to entry: The method of evaporating water from a moist material shall be stated when this term is used.

Source

If a terminological entry is reproduced from another document, the source shall be given at the end of the entry. If any changes are made to the original terminological entry, this shall be indicated, along with a description of what has been modified. A document given as a source of a terminological entry is informative. If this is the only mention of the document, it should be added to the Bibliography.

Within a terminological entry, cross-references can also be made to terms defined elsewhere. The Example (3.1.2) shows how this is done.

EXAMPLE

3.1.2

terminological entry

part of a terminological data collection which contains the terminological data (3.1.3) related to one concept (3.2.1)

Note 1 to entry: A terminological entry prepared in accordance with the principles and methods given in ISO 704 follows the same structural principles whether it is monolingual or multilingual.

[SOURCE: ISO 1087-1:2000, 3.8.2, modified – Note 1 to entry has been added.]

Copyright © 2016 Standards Australia, all rights reserved
Uncontrolled if printed

Symbol

Terms which contain a symbol should set the symbol on a new line. Refer to ISO 10241-1:2011 Table 1.

EXAMPLE **1.4.4** **flow** ***Q*** volume flow rate in L/min

Footnotes

Footnotes to any part of a terminological entry are not allowed.

Symbols and abbreviated terms

Purpose or rationale

The symbols and abbreviated terms clause or subclause provides a list of the symbols and abbreviated terms used in the document, along with their definitions.

Normative or informative?

The symbols and abbreviated terms clause is a normative element.

Mandatory, conditional or optional?

The symbols and abbreviated terms clause is a conditional element.

Numbering and subdivision

The symbols need not be numbered. For convenience, the symbols and abbreviated terms may be combined with the terms and definitions in order to bring together terms and their definitions, symbols and abbreviated terms under an appropriate composite title, for example "Terms, definitions, symbols and abbreviated terms".

Specific principles and rules

Only symbols used in the text shall be listed.

Unless there is a need to list symbols in a specific order to reflect technical criteria, all symbols should be listed in alphabetical order in the following sequence:

(a) upper case Latin letter followed by lower case Latin letter (*A, a, B, b,* etc.);

(b) letters without indices preceding letters with indices, and with letter indices preceding numerical ones (B, b, C, C_m, C_2, c, d, d_{ext}, d_{int}, d_1, etc.);

(c) Greek letters following Latin letters (Z, z, A, α, B, β, …, Λ, λ etc.);

(d) any other special symbols.

Measurement and test methods

Purpose or rationale

Measurement and test methods specify the procedure for determining the values of characteristics or

Copyright © 2016 Standards Australia, all rights reserved
Uncontrolled if printed

for checking conformity to stated requirements.

Measurement and test methods may be presented as separate clauses, or be incorporated in the requirements, or be presented as appendices (see Clause 20) or as separate parts (see Clause 6.3). A measurement and test method shall be prepared as a separate document if it is likely to be referred to in a number of other documents.

Normative or informative?

The measurement and test methods clause is a normative element.

Mandatory, conditional or optional?

The measurement and test methods clause is a conditional element.

Numbering and subdivision

Measurement and test methods may be subdivided in the following order (where appropriate):

(a) principle;

(b) reagents and/or materials (see Clause 18.5.3);

(c) apparatus (see Clause 18.5.4);

(d) preparation and preservation of test samples and test pieces;

(e) procedure;

(f) expression of results, including method of calculation and precision of the test method, and, in ISO, the measurement uncertainty;

(g) test report.

Specific principles and rules

General

A document which specifies test methods shall not imply any obligation to perform any kind of test. It shall merely state the method by which the test, if required and referred to (e.g. in the same or another document, in a regulation, or in contracts), is to be performed.

Numbering

In order to facilitate cross-referencing, individual reagents, materials and apparatus shall be numbered, even if there is only one.

Reagents and/or materials

The reagents and/or materials subclause is a conditional element giving a list of the reagents and/or materials used in the document.

The content of a reagents and/or materials clause will usually comprise an optional introductory text together with a list detailing one or more reagents and/or materials.

Copyright © 2016 Standards Australia, all rights reserved
Uncontrolled if printed

Apparatus

The apparatus subclause is a conditional element giving a list of the apparatus used in the document. Wherever possible, equipment produced by a single manufacturer should not be specified. Where such equipment is not readily available, this clause shall include such specifications for the equipment as to ensure that comparable testing can be conducted by all parties. See also Clause 38 regarding the use of trade names and trademarks.

The content of an apparatus clause will usually comprise an optional introductory text together with a list detailing one or more pieces of apparatus.

EXAMPLE

A.2 Apparatus

The usual laboratory apparatus and, in particular, the following.

(a) *Sample divider* — consisting of a conical sample divider or multiple-slot sample divider with a distribution system, e.g. ‘‘Split-it-right’’ sample divider, such as that shown in Figure A.1.

(b) *Sieve* — with round perforations of diameter 1.4 mm.

(c) *Tweezers*.

(d) *Scalpel*.

(e) *Paintbrush*.

(f) *Steel bowls* — of diameter 100 mm ± 5 mm; seven per test sample.

(g) *Balance* — which can be read to the nearest 0.01 g.

For information on alternative test methods, choice of test methods according to accuracy and test equipment, refer to SG-006.

Test report

This clause specifies which information is to be included in the test report. The clause shall require information to be given on at least the following aspects of the test:

(a) The sample.

(b) The test method used.

(c) The method used (if the Standard includes several).

(d) The result(s), including a reference to the clause which explains how the results were calculated.

(e) Any deviations from the procedure.

(f) Any unusual features observed.

(g) The date of the test.

Marking, labelling and packaging

Refer to SG 006.

Copyright © 2016 Standards Australia, all rights reserved
Uncontrolled if printed

Appendices

Purpose or rationale

Appendices are used to provide additional information to the main body of the document and are developed for several reasons, for example:

(a) when the information or table is very long and including it in the main body of the document would distract the user;

(b) to set apart special types of information (e.g. software, example forms, results of interlaboratory tests, alternative test methods, tables, lists, data); or

(c) to present information regarding a particular application of the document.

Normative or informative?

Appendices can be normative or informative elements.

Normative appendices provide additional normative text to the main body of the document.

Informative appendices provide additional information intended to assist the understanding or use of the document. The status of the appendix (informative or normative) shall be made clear by the way in which it is referred to in the text and shall be stated under the heading of the appendix.

Informative appendices may contain optional requirements. For example, a test method that is optional may contain requirements but there is no need to conform to these requirements to claim conformance with the document. The status of the appendix (informative or normative) shall be made clear by the way in which it is referred to in the text and shall be stated under the heading of the appendix.

EXAMPLE […] see Appendix A for additional information […] […] the test method shall be carried out as specified in Appendix B […]	The status of Appendix A is informative. The status of Appendix B is normative.

Mandatory, conditional or optional?

Appendices are optional elements.

Numbering and subdivision

Each appendix shall be designated by a heading comprising the word “Appendix” followed by a capital letter, starting with “A”, for example “Appendix A”. The appendix heading shall be followed by the indication “(normative)” or “(informative)”, and by the title.

EXAMPLE 1

Appendix A

(informative)

Example form

Copyright © 2016 Standards Australia, all rights reserved
Uncontrolled if printed

Appendices may be subdivided into clauses, subclauses, paragraphs and lists.

Numbers given to the clauses, subclauses, tables, figures and mathematical formulae of an appendix shall be preceded by the letter designating that appendix followed by a full-stop. The numbering shall start afresh with each appendix.

EXAMPLE 2

In the case of Appendix A, the first clause would be numbered A.1, the first figure would be Figure A.1, the first table would be Table A.1 and the first formula would be Formula (A.1).

Specific principles and rules

Each appendix shall be explicitly referred to within the text.

EXAMPLE

"Appendix B provides further information…";

"Use the methods described in Appendix C";

"See Figure A.6";

"Clause A.2 describes…";

"…as specified in Clause C.2.5.".

The way an appendix is referenced shall be consistent with its normative or informative purpose.

EXAMPLE

Referencing an informative appendix.

Incorrect: The system shall comprise three objects in sequence, see Appendix C.

Correct: The system shall comprise three objects in sequence. Appendix C provides guidance on the connection of the objects and commissioning of the system.

Bibliography

Purpose or rationale

The bibliography lists, for information, those documents which are cited informatively in the document, as well as other information resources.

Normative or informative?

The bibliography shall not contain requirements, permissions or recommendations.

Mandatory, conditional or optional?

The bibliography is a conditional element. Its inclusion is dependent on whether informative references are present in the document.

Copyright © 2016 Standards Australia, all rights reserved
Uncontrolled if printed

For example, in the following case, the citation is not normative but informative. Therefore, the document cited shall be listed not in the normative references clause but in the bibliography:

(a) Wiring of these connectors should take into account the wire and cable diameter of the cables defined in IEC 61156.

Numbering and subdivision

The order of referenced documents in the bibliography should follow Clause 10.3.

Specific principles and rules

The bibliography, if present, shall appear after the last Appendix.

Indexes

Indexes, if present, shall appear as the last element.

Copyright © 2016 Standards Australia, all rights reserved
Uncontrolled if printed

Components of the text

Clauses and subclauses

Purpose or rationale

Clauses and subclauses serve as the basic components in the subdivision of the content of a document. A document may also group clauses into Sections. See Clause 6.4.1.

Title

Each clause shall have a title.

Each first level subclause (e.g. 5.1, 5.2, etc.) should be given a title. In a Method of Test, clauses that list apparatus, reagents, equipment may list each item without a heading.

Numbering, subdivision and hanging paragraphs

Numbering

In a single section document, the clauses in each document or part shall be numbered with Arabic numerals, starting with 1 for the “Scope” clause (see Figure 3). The numbering shall be continuous up to but excluding any Appendices (see Clause 20).

In a multi-section document, the clauses shall be numbered with Arabic numerals, such that the section number appears first, followed by sequential numbering beginning with 1 so that the “Scope” clause is 1.1. The numbering shall be continuous up to the end of the section.

Subdivision

A subclause is a numbered subdivision of a clause. A clause may be subdivided into subclauses as far as the fifth level (e.g. 5.1.1.1.1, 5.1.1.1.2, etc.).

Too many levels of subdivision should be avoided, as this can make it hard for the user to understand the document.

Table 9 provides an example of numbering of divisions and subdivisions. Refer to SG-006.

Hanging paragraphs

“Hanging paragraphs” such as those shown in Figure 3 shall be avoided.

Incorrect	Correct
5 Uncertainty of the certified value The combined expanded uncertainty of the measurement is calculated... } hanging paragraph **5.1 Budget of uncertainty** [...]	**5 Uncertainty of the certified value** **5.1 General** The combined expanded uncertainty of the measurement is calculated... **5.2 Budget of uncertainty** [...]

Figure 3 — Example of a hanging paragraph (left) and one way to avoid it (right)

Copyright © 2016 Standards Australia, all rights reserved
Uncontrolled if printed

Referencing

Clauses and subclauses need not be specifically referred to in the text.

Lists

Purpose or rationale

A list serves to subdivide information to aid understanding.

Title

Lists do not have a title. They may, however, be preceded by a title or introductory phrase.

Numbering and subdivision

Each item in a list shall be preceded by a lower case letter within parentheses {(a), (b), (c)}. List items shall not be preceded by a dot point, dash point or similar unnumbered style.

Lists can be subdivided. If it is necessary to subdivide further an item in the latter type of list, or if more than one list appears in a clause, Preface or Introduction, up to three additional levels may be used, in the following order:

(a) Lower case Roman numbering {(i), (ii), (iii)}.

(b) Upper case letters {(A), (B), (C)}.

(c) Arabic numerals {(1), (2), (3)}.

If it is necessary to subdivide an item further, the following three levels shall be used, in the following order:

(i) Lower case Roman numbering [(i), (ii), (iii)].

(ii) Upper case letters [(A), (B), (C)].

(iii) Arabic numerals [(1), (2), (3)].

Numbering restarts at each new clause or subclause.

Referencing

Lists need not be specifically referred to in the text.

To facilitate cross-references to list items, numbered list shall be used. Within a subdivision, each list item in a numbered list shall have a unique identifier.

Use, for example, the following forms for references to lists:

EXAMPLE 3

“as specified in Clause 3.1(b)”;

“the requirements given in Clause B.2(c)”.

Copyright © 2016 Standards Australia, all rights reserved
Uncontrolled if printed

Content in lists

If the verb “shall” is used in the introduction to a list, that list shall contain requirements only; a recommendation may be included in a note only, inserted under the appropriate list item or at the end of the list.

If a list comprises recommendations and requirements, that list shall have a non-restrictive introduction, for example, “the following provisions apply:”.

Notes

Purpose or rationale

Notes are used for giving additional information intended to assist the understanding or use of the text of the document. The document shall be usable without the notes.

For rules on notes to figures, see Clause 29.5.4.

For rules on notes to tables, see Clause 30.5.1.

Notes to entry (in terminological entries) follow different rules from those for notes, see Clause 16.5.6.

Title

Notes do not have a title.

Numbering and subdivision

Within a given clause or subclause, all notes shall be numbered sequentially, including any notes to list items. The numbering restarts at each new subdivision. A single note in a subdivision need not be numbered.

Referencing

Notes need not be specifically referred to in the text.

Specific principles and rules

Notes shall not contain requirements (e.g. use of “shall”, see Table 4) or any information considered indispensable for the use of the document, for example instructions (imperative mood).

Examples

Refer to SG-006 for examples.

Examples

Purpose or rationale

Examples illustrate concepts presented in the document. The document shall be usable without the examples.

Title

Examples do not need to have a title, but they can, if necessary, be grouped into a clause or subclause entitled “Examples” or “Examples”. See examples in Clause 26.6.

Numbering and subdivision

Within a given clause or subclause, examples shall be numbered sequentially. The numbering restarts at each new subdivision. A single example in a subdivision need not be numbered.

Copyright © 2016 Standards Australia, all rights reserved
Uncontrolled if printed

Referencing

Examples need not be specifically referred to in the text.

If examples are referred to, use for example, the following forms for references:

"see Clause 6.6.3 Example 5";
"Clause 4 Example 2 lists …".

See Section 16 Terms and definitions for the use of examples in definitions.

Specific principles and rules

Examples shall not contain requirements (use of "shall"), or any information considered indispensable for the use of the document, for example instructions (imperative mood), recommendations (use of "should") or permission (use of "may"). Examples should be written as a statement of fact.

Examples

Refer to SG-006.

Footnotes

Purpose or rationale

Footnotes are not used in the body of a document but may be used with figures and tables. Any text that could be in a footnote is set as a note under the relevant text in the document and written as a statement of fact.

This Section applies to footnotes to text only, not footnotes to tables or figures.

Footnotes to text only appear in legacy content. Standards drafted in the Simplified Drafting Template do not use footnotes to text.

For rules on footnotes to figures, see Clause 29.5.5.

For rules on footnotes to tables, see Clause 30.5.2.

Mathematical formulae

Purpose or rationale

A mathematical formula uses symbols to express the relationship between quantities.

Title

Mathematical formulae do not have a title.

Numbering and subdivision

Referencing

If a formula is numbered, it should be referred to in the text. The purpose of a formula should be made clear by its context, for example, with an introductory proposition.

Copyright © 2016 Standards Australia, all rights reserved
Uncontrolled if printed

Specific principles and rules

Mathematical formulae shall be expressed in mathematically correct form.

The variables shall be represented by letter symbols. The meanings of the symbols shall be explained in connection with the mathematical formulae, unless they appear in a “Symbols and abbreviated terms” clause. The meanings may be set out in a Table as in Example 1 or as a sentence as in Example 2.

EXAMPLE 1

$$V = \frac{l}{t}$$

where

V = the speed of a point in uniform motion

l = the distance travelled

t = the duration

However, the same symbol shall never be used within a document both for a quantity and for its corresponding numerical value. For example, use of the formula in Example 1 and of the formula in Example 2 in the same context would imply that 1 = 3.6 which obviously is not true.

If, exceptionally, a formula between numerical values is used, the style shown in Example 2 shall be followed.

EXAMPLE 2

$$V = 3.6 \times \frac{l}{t}$$

where

V is the numerical value of the speed, expressed in kilometres per hour (km/h), of a point in uniform motion;

l is the numerical value of the distance travelled, expressed in metres (m);

t is the numerical value of the duration, expressed in seconds (s).

Descriptive terms or names of quantities shall not be arranged in the form of a mathematical formula. Names of quantities or multiletter abbreviated terms, for example presented in italics or with subscripts, shall not be used in the place of symbols.

Copyright © 2016 Standards Australia, all rights reserved
Uncontrolled if printed

EXAMPLE 3 Correct: $t_i = \sqrt{\frac{S_{\mathrm{ME},i}}{S_{\mathrm{MR},i}}}$ where t_i = the statistical value for the system *i* $S_{\mathrm{ME},i}$ = the residual mean square for the system *i* $S_{\mathrm{MR},i}$ = the mean square due to regression for the system *i*	Incorrect: $t_i = \sqrt{\frac{MSE_i}{MSR_i}}$ where t_i is the statistical value for the system *i*; MSE_i is the residual mean square for the system *i*; MSR_i is the mean square due to regression for the system *i*.

EXAMPLE 4 Correct: $\rho = \frac{m}{V}$	Incorrect: $density = \frac{mass}{volume}$

EXAMPLE 5 Correct: dim(*E*) = dim(*F*) · dim(*l*) where *E* = energy *F* = force *l* = length	Incorrect: dim(energy) = dim(force) · dim(length) or dim(*energy*) = dim(*force*) · dim(*length*)

The same symbol should not be used to represent different quantities within the same document. Subscripts can be useful to distinguish symbols for related concepts. Where possible, having more than one level of subscripts should be avoided. Use subscripts on the same line separated by a comma or full point without spaces either side.

Unit symbols shall not be used within mathematical formulae.

Where brackets within brackets are required in formulae, the normal order of use is {( )}.

Copyright © 2016 Standards Australia, all rights reserved
Uncontrolled if printed

Figures

Purpose or rationale

Figures are a graphical means of representation used when they are the most efficient means of presenting information in an easily comprehensible form.

Photographs and other media may be used if it is not possible to represent the concept as a line drawing.

Title

All figures shall have a concise figure title.

Numbering and subdivision

Refer to SG-006 for rules for figure numbering.

EXAMPLE **Figure X (1 of #)**

Subfigures

In general, the use of subfigures should be avoided as it complicates document layout and management. Refer to SG-006 for further guidance.

Referencing

Each figure shall be explicitly referred to within the text.

Use, for example, the following forms for references to figures and subfigures:

EXAMPLES	
shall be ..., as shown in Figure 8.	normative reference
“Figure 3 illustrates…”;	informative reference
“See Figure 6 (b)”.	informative reference
A typical example is shown in Figure 3.2.	informative reference

Cross-references within a figure to clauses in the document should be avoided wherever possible.

Notes are not permitted within a figure. All notes shall appear below the figure.

Choice of letter symbols, style of lettering

The main symbols used in drawings from ISO 80000-3 are given in Table 10. Refer to SG-006 for further guidance.

Copyright © 2016 Standards Australia, all rights reserved
Uncontrolled if printed

Table 10 — Main symbols used in drawings from ISO 80000-3

Name	Symbols
Length	l, L
Breadth	b, B
Height	h, H
Thickness	d, δ
Radius	r, R
Radial distance	r_Q, ρ
Diameter	d, D
Length of path	s
Distance	d, r
Cartesian coordinates	x, y, z
Position vector	$\boldsymbol{r}$
Displacement	$\Delta\boldsymbol{r}$
Radius of curvature	ρ

See Figure 4 for an example of these elements and the order in which the other related information shall be listed.

Dimensions in millimetres

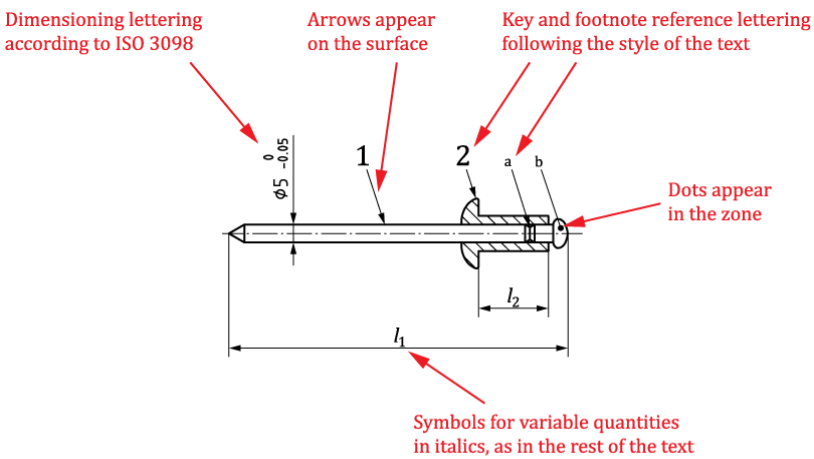

l_1	l_2
50	10.5
70	15
90	19

Copyright © 2016 Standards Australia, all rights reserved
Uncontrolled if printed

Key

1 mandrel shank

2 blind rivet head

The mandrel shall be designed such that the blind rivet end deforms during installation, and the shank can expand.

[a] The break area shall be milled.

[b] The mandrel head is commonly chromium plated.

NOTE Figure # illustrates a type A rivet head.

Figure 4 — Example illustrating the elements of a figure

Key and labels to figures

Labels in figures shall not contain requirements that are not otherwise stated in the text of the document.

Any text in a Figure shall be consistent with the language used in the text of the document.

In graphs, labelling on the axes shall not be replaced by key references to avoid any possible confusion between the number representing a key reference and a number representing a value on the axis. Labelling of curves, lines, etc. on the graph shall be replaced by key references.

In flowcharts and organigrams, the use of textual descriptions is permitted (see Clause 29.6.4).

Notes to figures

A single note to a figure shall be preceded by “NOTE”, placed at the beginning of the first line of the text of the note. When several notes occur in the same figure, they shall be designated “NOTE 1”, “NOTE 2”, “NOTE 3”, etc. The numbering restarts for each new figure.

Notes to figures shall not contain requirements or any information considered indispensable for the use of the document. Notes to figures need not be referred to.

Any requirements relating to the content of a figure shall be given in the text, in a footnote to the figure or as a paragraph between the figure and its title.

Footnotes to figures

Footnotes to figures are numbered independently from footnotes to the text.

Footnotes to figures shall be distinguished by superscript lower case letters, starting with “a”. The footnotes shall be referred to in the figure by inserting the same superscript lower case letter.

Footnotes to figures may contain requirements.

Types of figures

Mechanical engineering drawings

Refer to SG-006 for guidance

Graphical symbols

Refer to SG-006 for guidance

Circuit diagrams and connection diagrams

Refer to SG-006 for guidance.

Flowcharts

Refer to SG-006 for guidance.

Copyright © 2016 Standards Australia, all rights reserved
Uncontrolled if printed

Tables

Purpose or rationale

Tables are used when they are the most efficient means of presenting information in an easily comprehensible form.

Title

Tables should have a concise Table title.

Numbering and subdivision

Tables should be numbered. Refer to SG-006 for more information.

Referencing

Each table shall be explicitly referred to within the text.

Use, for example, the following forms for references to tables or items within Tables:

EXAMPLES	
“Table 3 lists…”;	informative reference
“See Table B.1”.	informative reference
... shall be in accordance with Table 3.	normative reference
shall conform to Table 20 Item 1.	normative reference
shall be limited as per Table 20 Item 3.	normative reference

Specific principles and rules

Notes to tables

Notes to tables are general and apply to the entire table. Use footnotes for information that is specific to a cell or a range of cells. Notes to tables shall be located within the frame of the relevant table and shall not precede table footnotes. A single note in a table shall be preceded by “NOTE”, placed at the beginning of the first line of the text of the note. When several notes occur in the same table, they shall be designated “NOTE 1”, “NOTE 2”, “NOTE 3”, etc. The numbering restarts for each new table. Each note shall be in a separate row.

Notes to tables shall not contain requirements or any information considered indispensable for the use of the document. Any requirements relating to the content of a table shall be given in the text, in a footnote to the table or as a paragraph within the table. Notes to tables need not be referred to.

Footnotes to tables

Footnotes to tables are numbered sequentially. They shall be located in the first row at the end of the table and each subsequent footnote shall be in a separate row.

Footnotes to tables shall be distinguished by superscript lower case letters, starting with “a”. The footnotes shall be referred to in the table by inserting the same superscript lower case letter.

Footnotes to tables may contain requirements.

Copyright © 2016 Standards Australia, all rights reserved
Uncontrolled if printed

Keys to tables

In tables, it is sometimes necessary to abbreviate words or references in order to save space or to improve readability. The meaning of such abbreviated terms shall be explained in a key. See Table 12.

Table 12 — Example of a table with a key

Data object name	Common data class	Explanation	T	M/O/C
LNName		The name shall be composed of the class name, the LN-Prefix and LN-Instance-ID according to IEC 61850-7-2:2010, Clause 22.		
Data objects				
Status information				
Op	ACT	Level of action required	T	M
Settings				
StrVal	ASG	Start level set-point		C
OpDITmms	ING	Operate delay time [ms]		O
Key T = Transient data objects M/O/C = The data object is mandatory (M) or optional (O), or conditional (C).				

Copyright © 2016 Standards Australia, all rights reserved
Uncontrolled if printed

Examples

EXAMPLE 1

The layout of the different elements that can appear in a table and their order of appearance.

Dimensions in millimetres

Type	Length	Inside diameter	Outside diameter
	l_1[a]	d_1	
	l_2	d_2[b c]	

A paragraph containing a requirement.

[a] Table footnote.

[b] Table footnote.

[c] Table footnote.

NOTE 1 Table note.

NOTE 2 Table note.

EXAMPLE 2

When there are several different units.

Type	Linear density Kg/m	Inside diameter mm	Outside diameter mm

EXAMPLE 3

When all the units are the same.

Dimensions in millimetres

Type	Length	Inside diameter	Outside diameter

Copyright © 2016 Standards Australia, all rights reserved
Uncontrolled if printed

EXAMPLE 4

Correct and incorrect table headers. Table cells shall not be split diagonally.

Correct:

Dimension	Type		
	A	B	C

Incorrect:

Type / Dimension	A	B	C

Commentaries

Purpose or rationale

Commentaries are a means of providing additional guidance. The document shall be useable without the commentaries.

Title

Commentaries do not have a title.

The text of the Commentary shall start with the word "Commentary".

Numbering and subdivision

All Commentary texts shall be numbered starting with a C then using the number of the clause to which they relate.

Referencing

Commentaries need not be specifically referred to in the text.

If Commentaries are referred to, use for example, the following form for references:

See Commentary C6.6.3

Specific principles and rules

Commentaries shall not contain requirements (use of “shall”), or any information considered indispensable for the use of the document, for example instructions (imperative mood). They may contain Figures and Tables.

Commentaries normally appear after the clause to which they relate but may also appear before the first numbered clause of a Section if they apply to the whole Section.

When Commentaries are included in a document, add text to the Preface as indicated in Clause 12.5.

Copyright © 2016 Standards Australia, all rights reserved
Uncontrolled if printed

Policy

Patent rights

Refer to SG-006 for information concerning patent rights.

Copyright

Copyright in documents is governed by Standardisation Guide No. 1, Preparing Standards (SG-001).

Documents may require references to and acknowledgment of copyright material. Copyright references may be informative (see EXAMPLE) or normative.

EXAMPLE

In the following case, the reference is informative because the source Standard is only the vehicle for the requirement and the Standard itself is never referenced normatively in the document.

> This clause has been reproduced and modified with permission granted by BSI Standards Limited.
>
> Isolation kennels shall be used to prevent spread of infectious diseases. Periods of isolation should be approved by a veterinarian. Isolation kennels with separate areas and cleaning equipment shall be provided when required.
>
> NOTE: An isolation kennel may be at a separate location to the facility where the dog is normally housed.

[SOURCE: BS 8517-1:2016 Clause 5, modified.]

Aspects of conformity assessment

Documents containing requirements for products, processes, services, persons, systems and bodies

Refer to SG-006 for information on conformity assessment requirements. Documents shall not specify requirements that testing of conformity is to be carried out by a specific party, e.g. a document cannot require that testing shall only be performed by an independent laboratory.

Conformity assessment schemes and systems

Refer to SG-006.

References to ISO/IEC conformity assessment documents

Refer to SG-006.

Assignment of roles and responsibilities

The person or organisation that is implementing a document is responsible for ensuring the requirements in the document are fulfilled. Requirements should not assign an action to a specific party, i.e. a requirement should state what, but not who.

Copyright © 2016 Standards Australia, all rights reserved
Uncontrolled if printed

EXAMPLE

Incorrect: “The mine supervisor shall keep accurate records of all stages of the remote control mining equipment’s life cycle.”

Correct: “Accurate records shall be kept of all stages of the remote control mining equipment’s life cycle.”

[AS/NZS 4240.3:2013]

Any request to assign an action to a specific party requires approval from the Standards Australia Production Management Group (PMG).

NOTE 1 Roles and responsibilities are acceptable within informative statements.

Aspects of quality management systems, reliability and sampling

Refer to SG-006.

Management standards (MS) and management systems standards (MSS)

Refer to SG-006.

Use of trade names and trademarks

A correct designation or description of a product shall be given rather than a trade name or trademark.

EXAMPLE 1

Instead of “Teflon ™”, write “polytetrafluoroethylene (PTFE)”.

If it is known that only one product is currently available that is suitable for the successful application of the document, the trade name or trademark of the product may be given in the text of the document but shall be associated with a footnote as shown in Example 2.

EXAMPLE 2

… [trade name or trademark of product] … is the [trade name or trademark] of a product supplied by … [supplier] …. This information is given for the convenience of users of this document and does not constitute an endorsement by … [Standards Australia, ISO or IEC] … of the product named. Equivalent products may be used if they can be shown to lead to the same results.

If it is considered essential to give an example (or examples) of commercially available products suitable for successful application of the document because the product characteristics are difficult to describe in detail, trade names or trademarks may be given in a footnote as shown in Example 3.

Copyright © 2016 Standards Australia, all rights reserved
Uncontrolled if printed

EXAMPLE 3

… [trade name(s) or trademark(s) of product(s)] … is (are) an example(s) of a suitable product(s) available commercially. This information is given for the convenience of users of this document and does not constitute an endorsement by … [Standards Australia, ISO or IEC] … of this (these) product(s).

Appendix A Drafting checklist

Refer to **Appendix A – Drafting checklist** in the Drafting Pack or to SG-006.

Appendix B Quantities and units

Refer to SG-006.

Appendix C Reference documents and sources for drafting

Refer to SG-006.

Appendix D Example of how to set out product conformity requirements

Refer to SG-006.

Appendix E Adopted text documents

Refer to SG-006.

Appendix F Indication of alignment with international standards

Refer to SG-006.

Copyright © 2016 Standards Australia, all rights reserved
Uncontrolled if printed