0960 ASSEMBLY INSTRUCTIONS

TWIN LOFT BED WITH DESK

Adult assembly required. For ages six and up.

CONGRATULATIONS

You've purchased a fine product. All of our easy - to-assemble products are designed and carefully tested to meet the highest quality standards - Yours. We're included simple step-by-step instructions to help you recommend that you follow the steps below.

1. Please read the instructions thoroughly
2. Identify all parts and hardware, and
3. Gather the tool(s) necessary

NOTE: Do not tighten screws until unit is fully assembled. Only then tighten all screws.

PARTS INFORMATION

To protect your parts during assembly

CARE INSTRUCTIONS

To clean surface use only water on a damp cloth. Do not use window cleaners or cleaning abrasives as it will scratch the surface and could damage the protective coating.

PARTS LIST

REF	PART NAME	QUANTITY
A	Left Head Board	1
B	Right Head Board	1
C	Long Guard Rail	3
D	Side Rail	2
E	Desk Top	1
F	Back Board	1
G	Roll Slat	1
H	Ladder	1

HARDWARE AND TOOLS DIAGRAM

A1	Barrel Bolt D6 x 115	20
B1	Barrel Nut D6 x 13	20
C1	Barrel Bolt D6 x 30	4
D1	Wood Screw D4.3 x 40	6
E1	Wood Screw D4.3 x 30	32
F1	Wood Screw D4.3 x 15	18
G1	Ladder Hook	2
H1	Plate Paste	3
I1	Nex Key	1

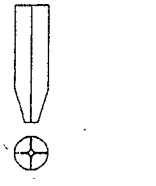

Note: You will also need a philips Screwdriver *(not included)*



Note: You will need a flathend screwdriver to properly orientate the barrel nuts during assembly

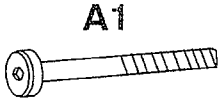



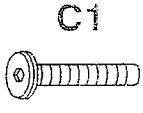

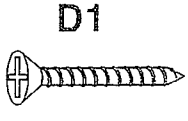

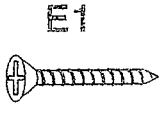

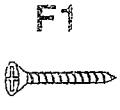

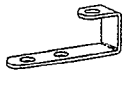

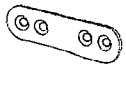

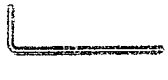

ASSEMBLY INSTRUCTIONS

TWIN LOFT BED WITH DESK

Adult assembly required. For ages six and up.

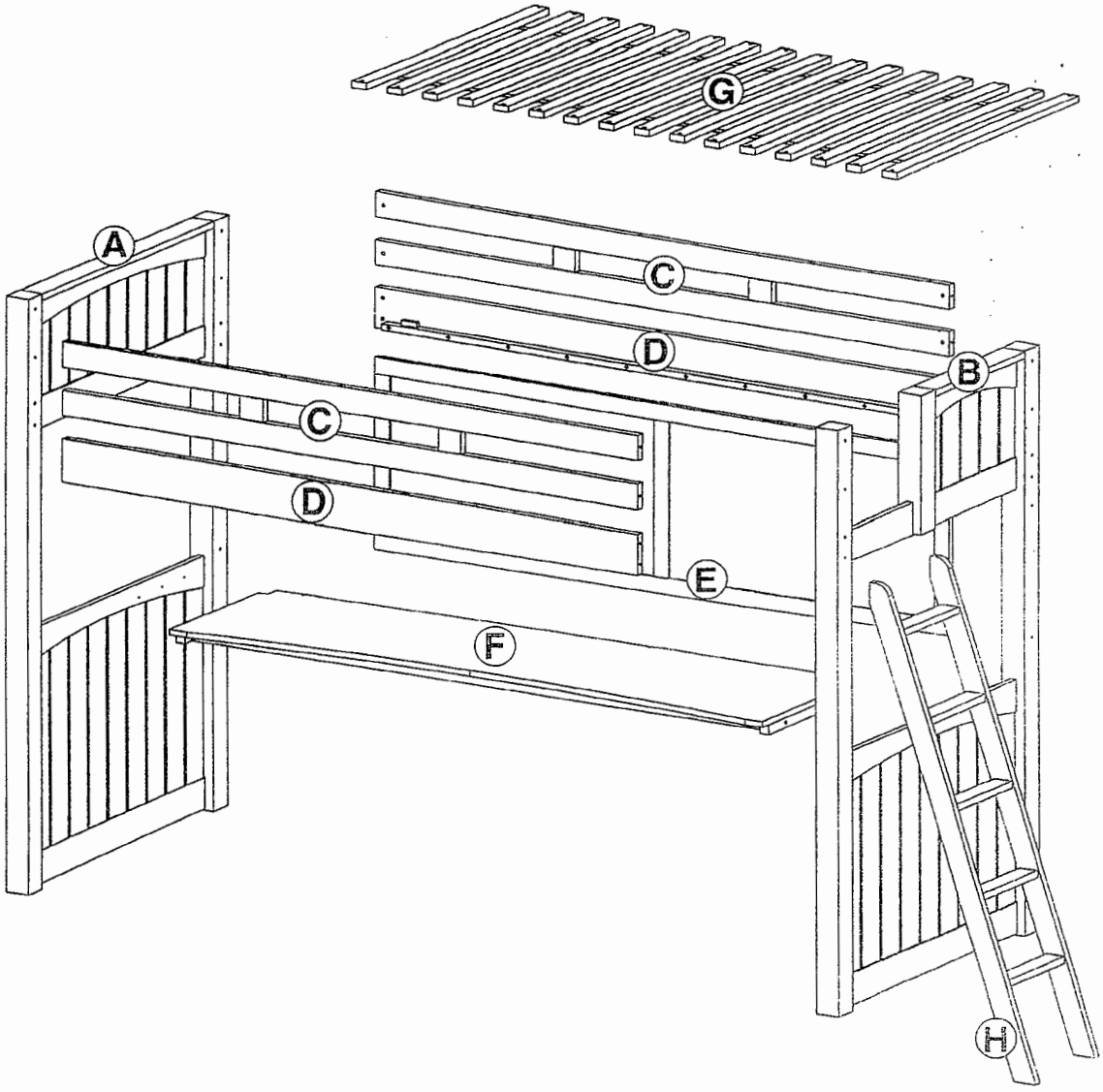

ASSEMBLY INSTRUCTIONS

TWIN LOFT BED WITH DESK

Adult assembly required. For ages six and up.

STEP 1

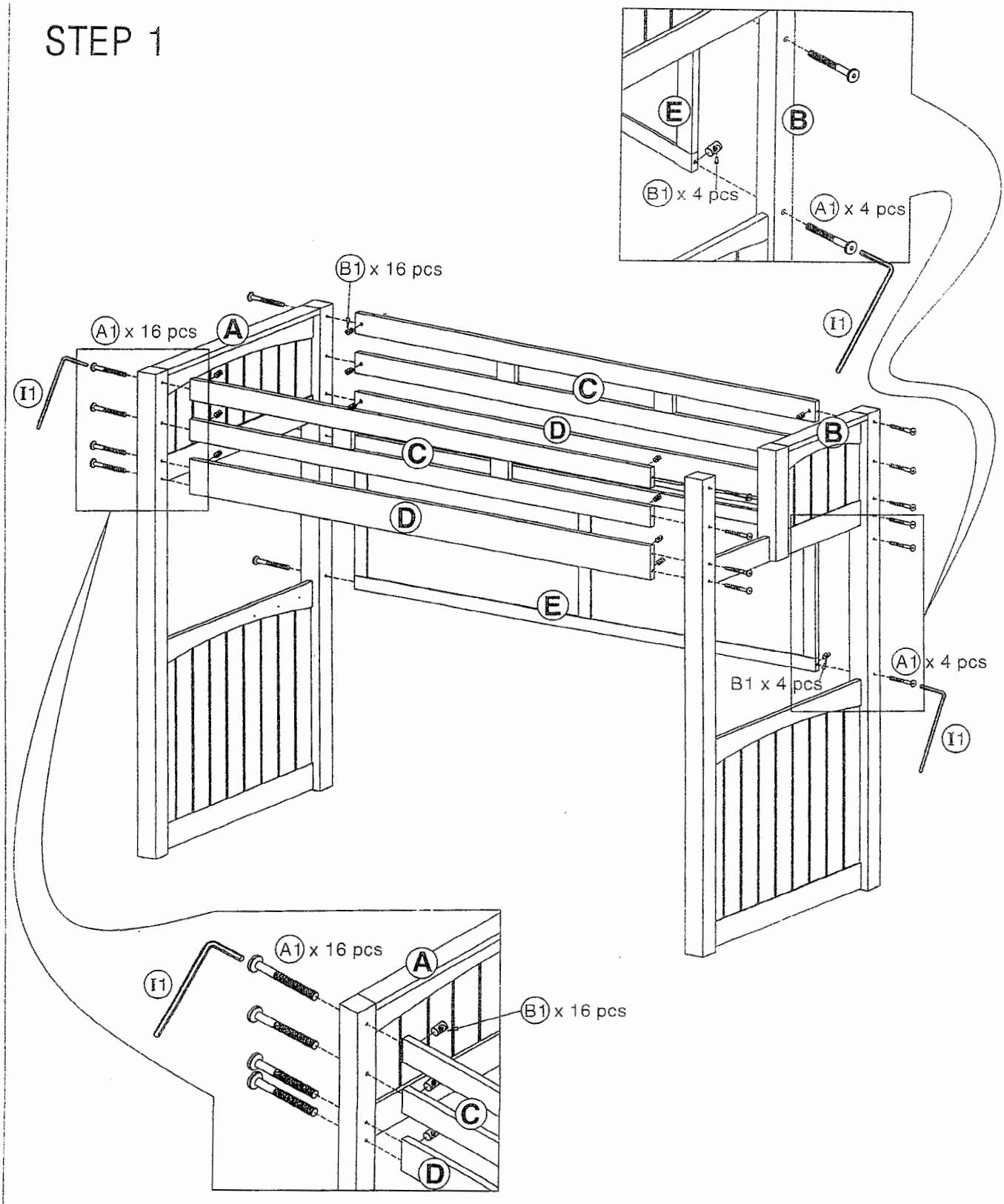

0960

ASSEMBLY INSTRUCTIONS

TWIN LOFT BED WITH DESK

Adult assembly required. For ages six and up.

STEP 2

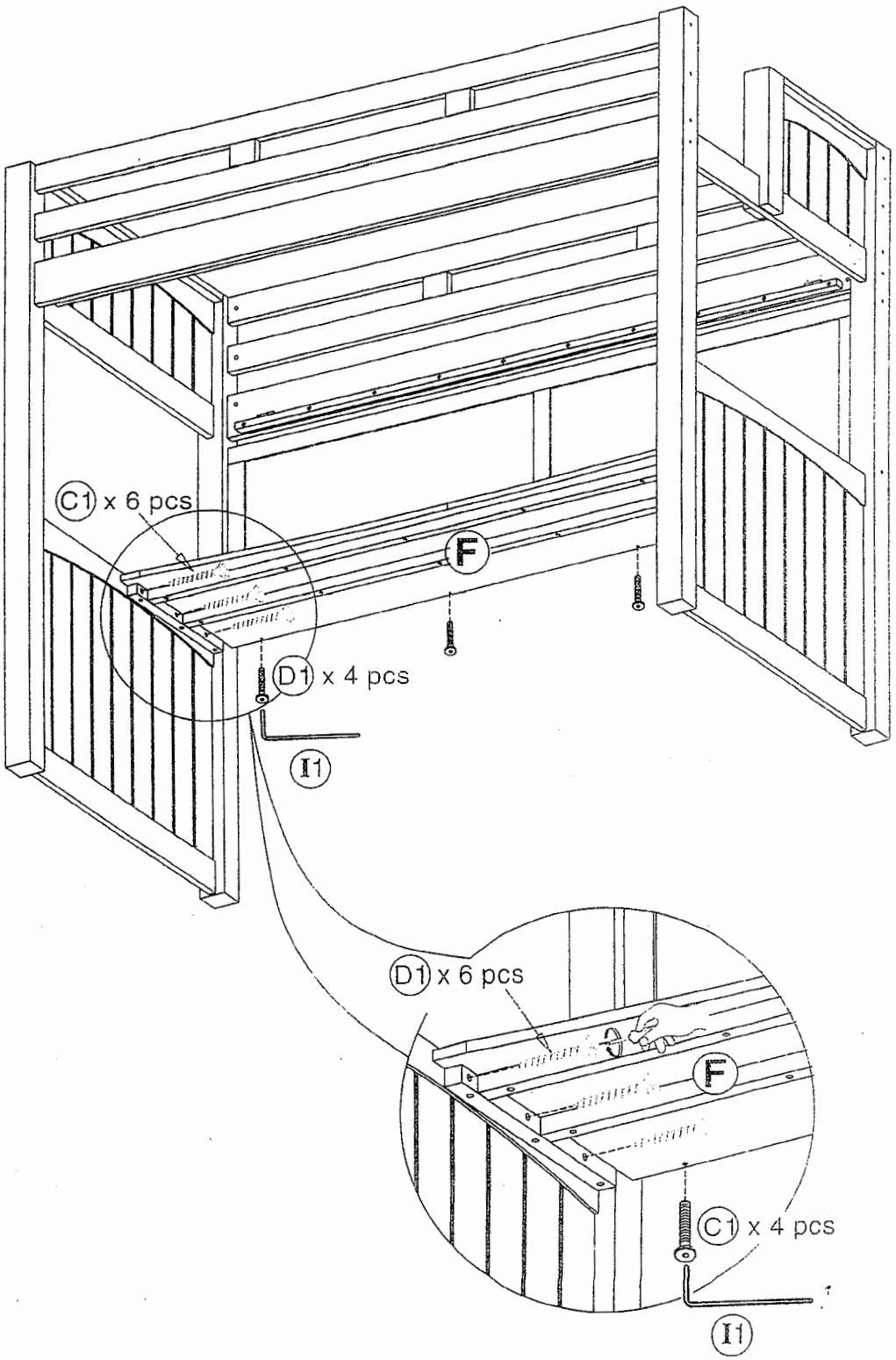

ASSEMBLY INSTRUCTIONS

TWIN LOFT BED WITH DESK

Adult assembly required. For ages six and up.

STEP 3

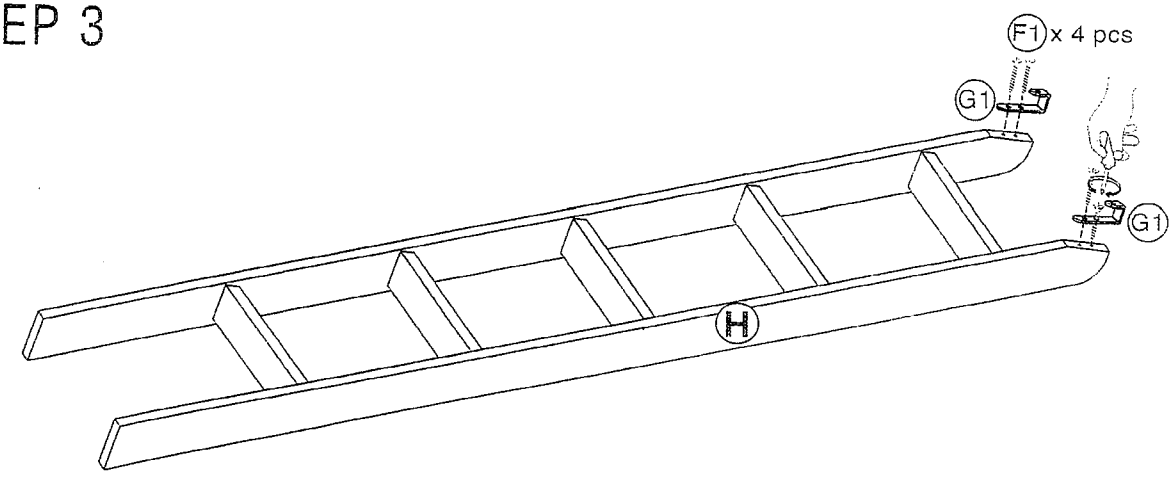

STEP 4

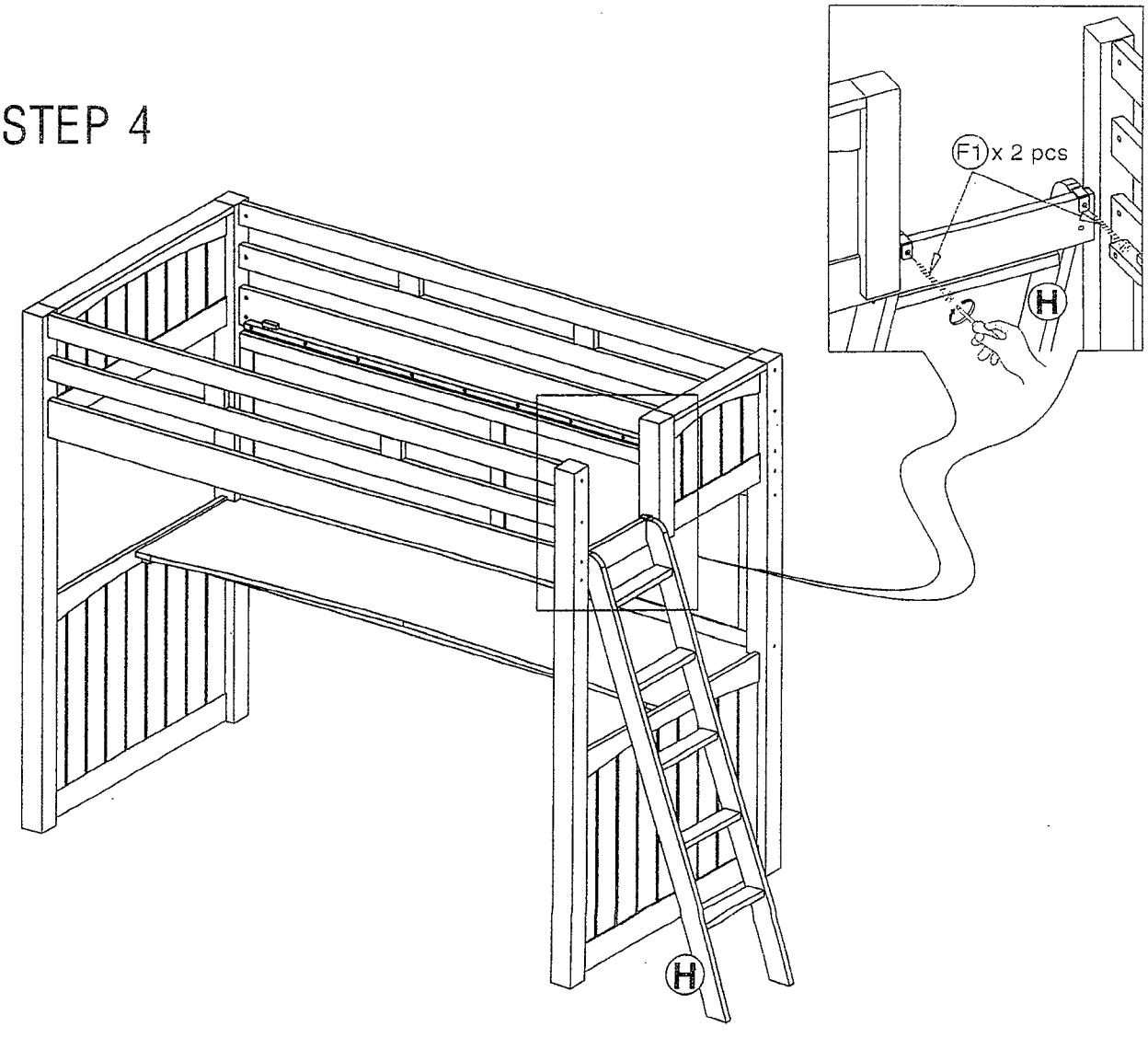

ASSEMBLY INSTRUCTIONS

TWIN LOFT BED WITH DESK

Adult assembly required. For ages six and up.

STEP 5

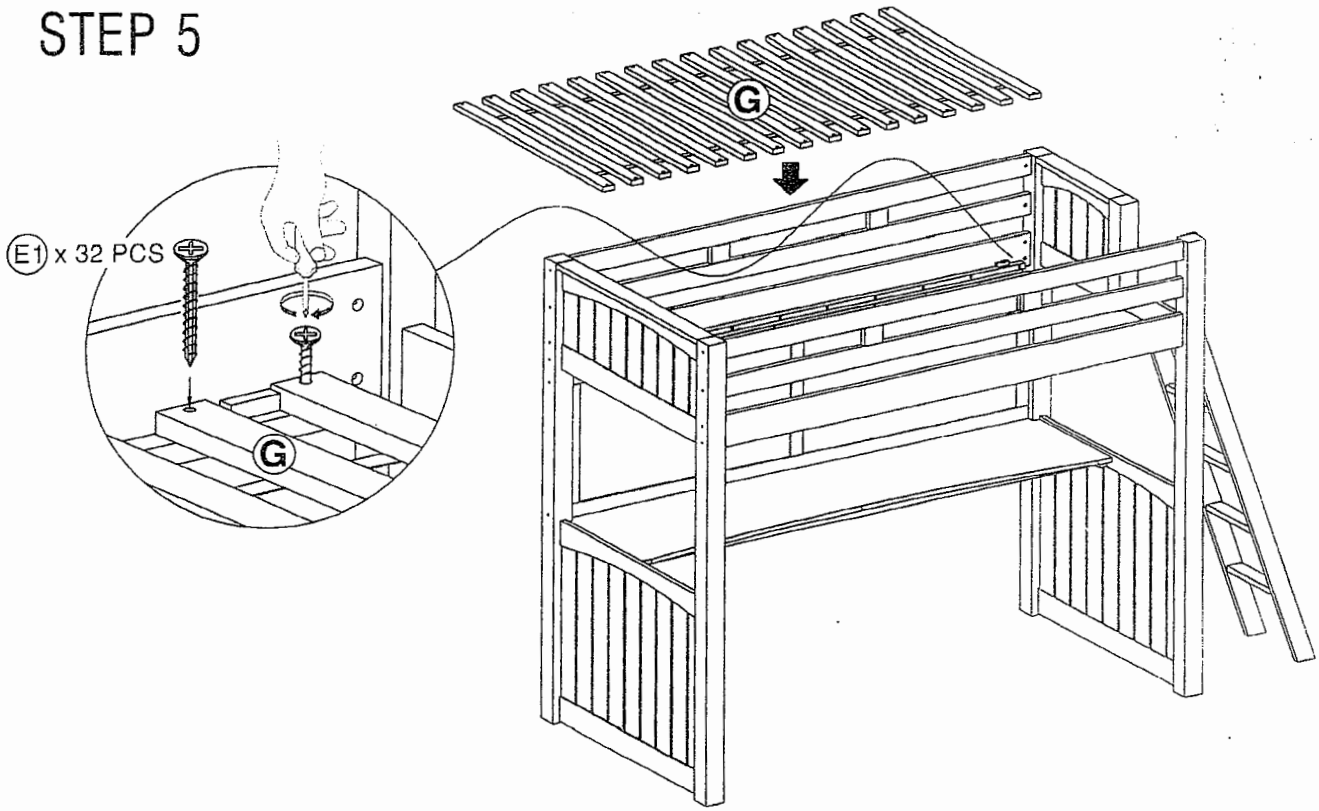

STEP 6

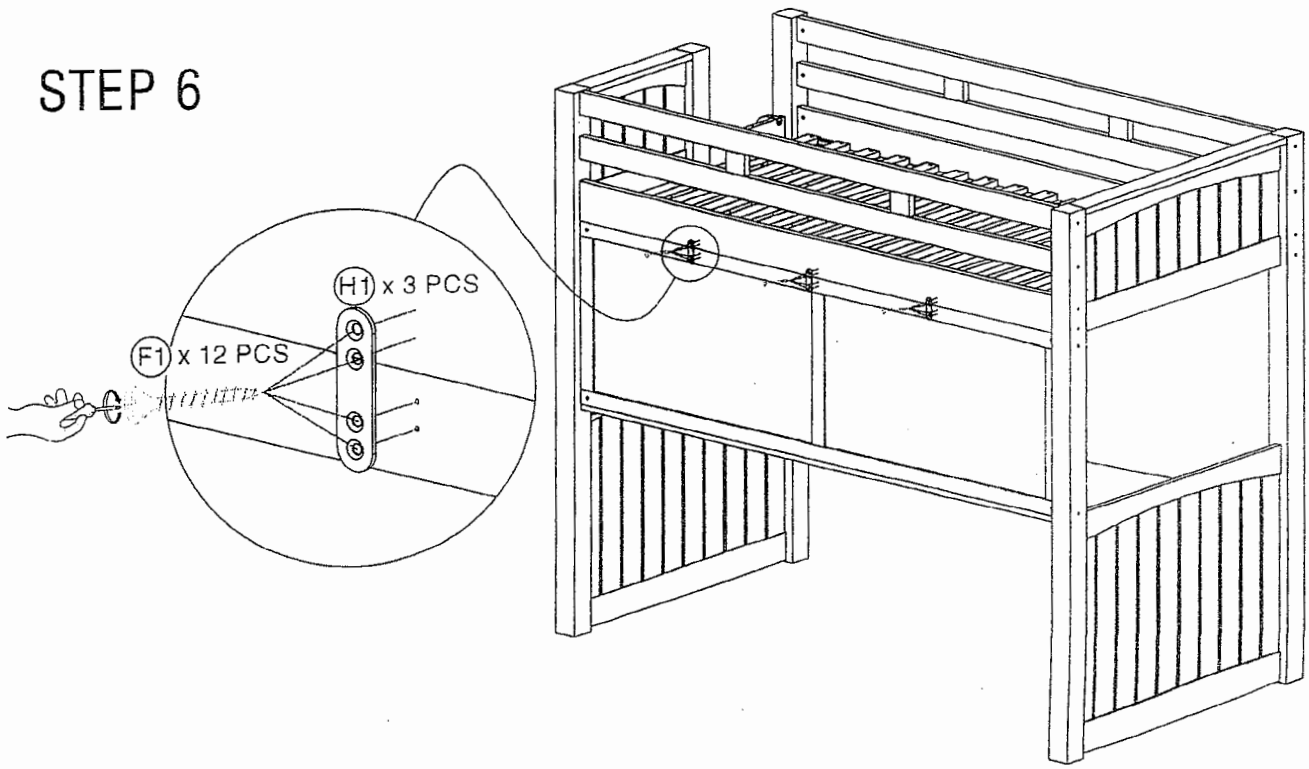

ASSEMBLY INSTRUCTIONS

TWIN LOFT BED WITH DESK

Adult assembly required. For ages six and up.

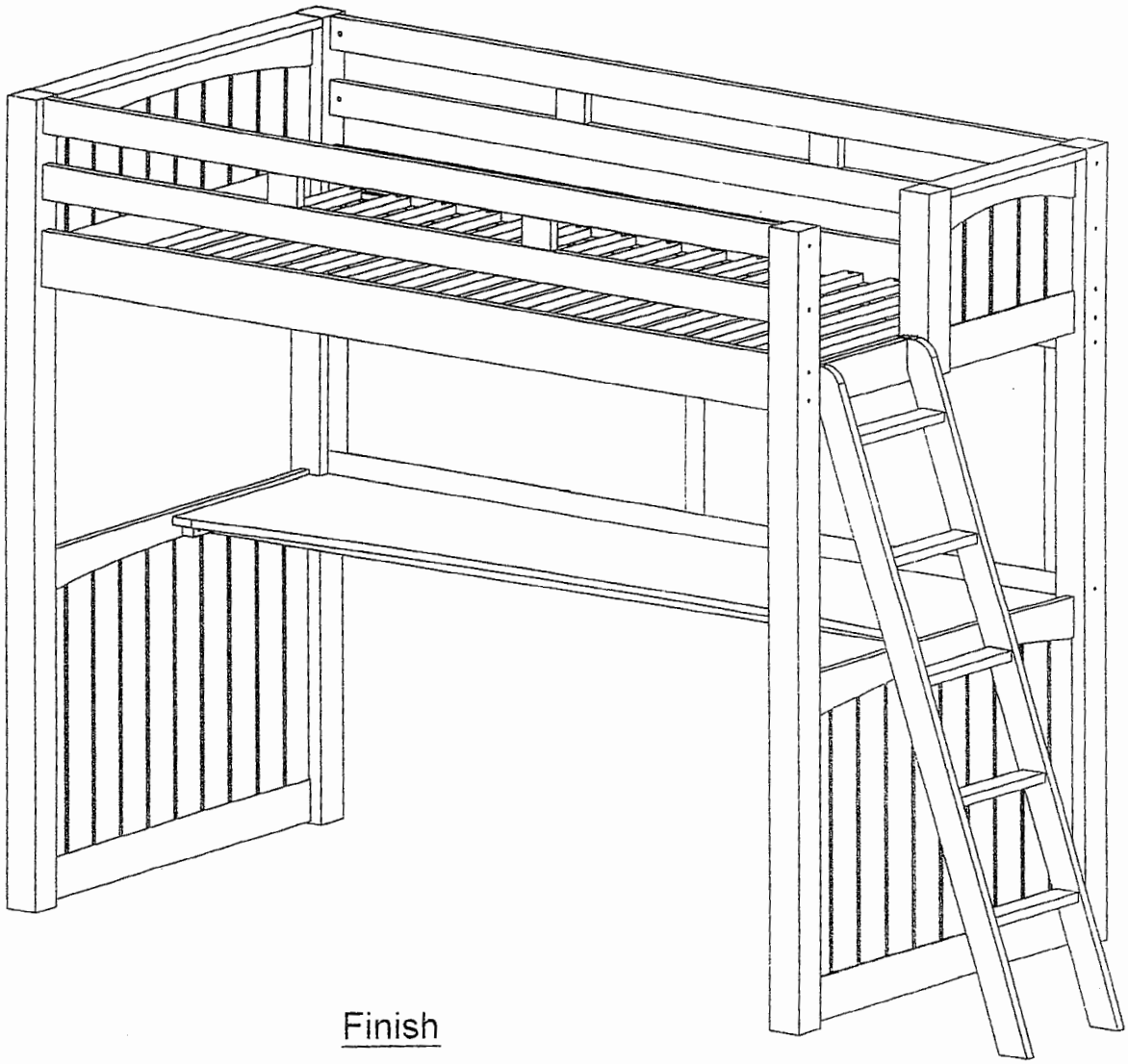

Finish

SAFETY WARNING

We put your child's safety as a Top Priority. Our bunk beds have been tested by an independent laboratory and are certified to be in compliance with ASTMF-1427, "Standard Consumer Safety Specification for Bunk Beds" and U.S. Government specifications 16 Code of Federal Regulations, parts 1213 and 1513.

1. Follow the information on the warning attached to the upper bunk end structure and on the carton. Do not remove this label.
2. Always use the recommended size mattress or mattress support or both to help prevent the likelihood of entrapment or falls.
3. Surface of mattress must be at least five inches (127mm) below the upper edge of guardrails.
4. Do not allow children less than six years of age to use the upper bunk.
5. Prohibit more than one person on upper bunk.
6. Periodically check and ensure that the guardrail, ladder and other components are in their proper position, free from damage, and that all connectors are tight.
7. Do not allow horseplay on or under the bed and prohibit jumping on the bed.
8. Always use the ladder for entering and leaving the upper bunk.
9. Do not use substitute parts. Contact the manufacturer or dealer for replacement parts.
10. Use of a night light may provide added safety precaution for a child using upper bunk.
11. If the bunk bed will be placed next to a wall, the guardrail that runs the full length of the bed should be placed against the wall to prevent entrapment between the bed and the wall. (This applies only to bunk beds without two full-length guardrails.)
12. Always use guardrails or both long sides of the upper bunk.
13. The use of water or sleep flotation mattress is prohibited.
14. Keep these instructions for future reference.

STRANGULATION HAZARD

Never attach or hang items to any part of the bunk bed that are not designed for use with the bed for example, but not limited to hooks, belts, and jump ropes.

SIZE OF MATTRESS AND FOUNDATION

Use only mattress which is 74" – 75" long and 37 1/2"-38 1/2" wide on twin upper bunk or 52 1/2"-53 1/2" wide on full upper benk. The total thickness of mattress and foundation (slat kit, bunk board, etc.) combined must not exceed 6".

Note : There must be at least 5" from mattress sleeping surface to top edge of guardrail.