VOLTS

energy storage

PV-STATION AND ESS VOLTS MAX 50kW 71kWh INSTALLATION

Address

ILLUSTRATIVE SAMPLE

Project documentation

VOLTS Gulf

Designations in the project:

- solar panels for the first MPPT controller
- solar panels for the second MPPT controller
- solar panels for the third MPPT controller
- solar panels for the fourth MPPT controller

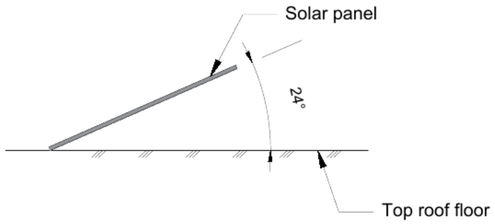

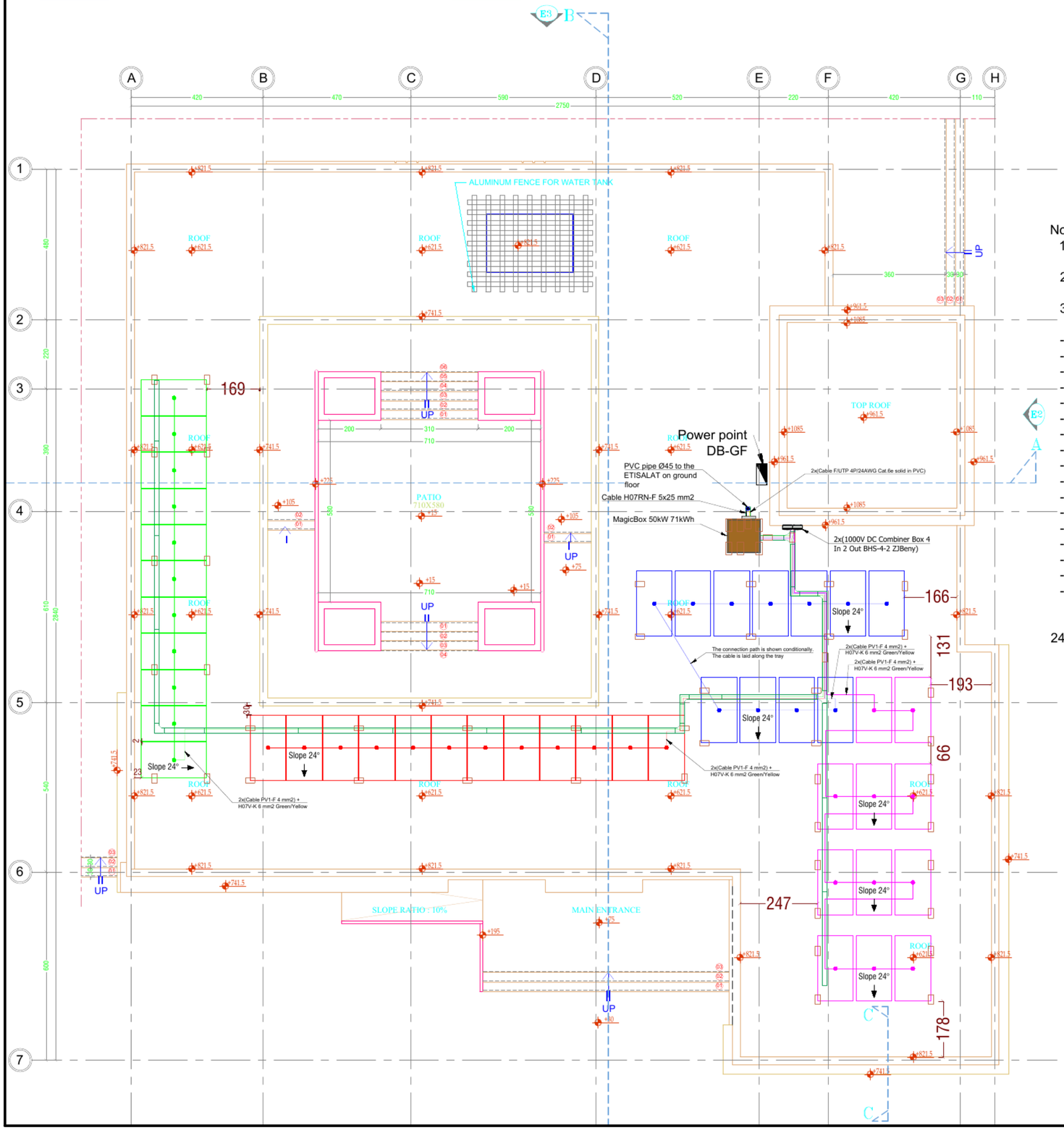

Notes:

1. The total number of solar panels is 45 pieces;
2. The total power of solar panels is 26550 W;
3. The project uses solar panels JKM590N-72HL4-BDV 590Watt with characteristics:
   - Rated Maximum Power(Pmax) [W] - 590 W;
   - Open Circuit Voltage(Voc) M - 49.90 V;
   - Maximum Power Voltage(Vmp) M - 41.96 V;
   - Short Circuit Current(Isc) [A] - 14.00 A;
   - Maximum Power Current(Imp) [A]- 13.11 A;
   - Module Efficiency [%] - 21.3%;
   - Maximum System Voltage 600V DC;
   - Operating Temperature - - 40°C-+85°C ;
   - Max. Series Fuse Rating - 20 A;
   - Maximum Static Load,Front - 5400Pa (112 lb/ft^2);
   - Maximum Static Load,Back - 2400Pa (50 lb/ft^2);
   - Cell - Mono-16BB;
   - Weight - 31.0 kg
   - Dimensions - 2278±2mm x 1134±2mm x 30±1 mm;
   - Cable Cross Section Size - 4mm^2 (IEC), 12 AWG(UL)
   - No. of cells -144(6x24);
   - J-Box - IP68, 3 bypass diodes
4. The optimal angle of inclination of the solar panels is 24 degrees

Power connection AC
Information and control
Power connection PV DC

LAND KEY :

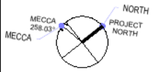

ARCHITECT ID:

GENERAL NOTES :

REV. NO.	DESCRIPTION	Date

MASTER DEVELOPER :

OWNER:
John Doe

CONSULTANT :
VOLTS energy storage

PROJECT NAME :
RESIDENTIAL VILLA

ZONE :
Address

PLOT NO :
Sample

SECTOR NO :
Sample

PROJECT DESCRIPTION :
PV-STATION AND ESS VOLTS MAX 50kW 71kWh INSTALLATION

DRAWING TITLE :
TOP ROOF PLAN
SOLAR PANEL INSTALATION
CABLE ROUTE

DRAWING NO :

REVISION NO:

SUBMISSION DATE :
Sample date

SCALE :
1:100

PROJECT ID :

DRAWING SIZE :
A2

OFFICIAL USE ONLY :

OFFICIAL USE ONLY :

Designations

- power connection AC
- power connection DC
- information and control
- neutral conductor
- block boundary
- power flow direction

1000V DC Combiner Box 4 In 2 Out BHS-4-2 (ZJBeny) №1

Solar Panel Sting №1

Solar Panel Sting №2

QS1 F1,F2 QS2 F3,F4 FV1 FV2 PE PE

1000V DC Combiner Box 4 In 2 Out BHS-4-2 (ZJBeny) №2

Solar Panel Sting №3

Solar Panel Sting №4

QS1 F1,F2 QS2 F3,F4 FV1 FV2 PE PE

Distribution Box - Ground Floor

Power input from MDB
230/400B 50Hz

L1, L2, L3 N PE

QS1
3P 100A

Phase L1, L2, L3

Phase L1, L2, L3

QD1
3P+N 63A

QD2
3P+N 63A

1L1
1L2
1L3
1N
PE

2L1
2L2
2L3
2N

First Load distribution buses

Second Load distribution buses

Control Unit VOLTS

Programmable Logic Controller

PE
N
QF1
3P 80A
Wh1

Grid input
L1-L3

KM1 KM2

Laod output
L1-L3

PE
N
Wh2

PCS output
L1-L3

VOLTS MAX 50 kW 71kWh

Power Conversion System

PCS Control PCB

PE
N
DC/AC UZ1
DC/DC UZ2
DC/DC UZ3

PCS output L1-L3

Batt. Rack Control Box

Rack contr. unit

QF1
100A

Batt. Module 1 MCU

Batt. Module 7 MCU

Resposible dept.	Technical reference	Document types Functional Electrical diagram	Document status	
VOLTS energy storage	Created by Sample	Title PV-STATION AND ESS VOLTS MAX 50kW 71kWh INSTALLATION	Address	
	Approved by Sample		Rev: 1	Date of issue: Sample date / Lang / Sheet: 1/1

A1 DB-GF

Device	Cont.	Circuit
MAIN GRID SWITCH	QS1:L1	1
	QS1:L2	2
	QS1:L3	3
	Geniral N-bus	4
	Geniral PE-bus	5

Device	Cont.	Circuit
LOAD TERMINAL	Load:L1	6
	Load:L2	7
	Load:L3	8

K1.1
K1.2
K1.3
K1.4
K1.5

K2.1
K2.2
K2.3

A2.1 Control Unit VOLTS

Cont.	Circuit	Device
1	XT1.1 "1L1"	GRID TERMINAL
2	XT1.3 "1L2"	
3	XT1.3 "1L3"	
4	XT2 "N"	
5	XT3 "PE"	

Cont.	Circuit	Device
6	XT1.4 "2L1"	LOAD TERMINAL
7	XT1.5 "2L2"	
8	XT1.6 "2L3"	

Device	Circuit	Cont.
PCS TERMINAL	XT1.7 "L1-out"	11
	XT1.8 "L2-out"	12
	XT1.9 "L3-out"	13
	XT2 "N"	14
	XT3 "PE"	15

K3.1
K3.2
K3.3
K3.4
K3.5

A5 MagicBox 50kW 71kWh

UZ1.1 PCS Deye SUN-50K-SG01HP3-EU-BM4

Cont.	Circuit	Device
1	LOAD-R	LOAD OUTPUT TERMINAL
2	LOAD-S	
3	LOAD-T	
4	LOAD-N	
5	PE-BAR	

K24

Cont.	Circuit
6	PV1:+
7	PV1:-
8	PV2:+
9	PV2:-
10	PV3:+
11	PV3:-
12	PV4:+
13	PV4:-

K4
K5
K6
K7
K8
K9
K10
K11

Cont.	Circuit	Device
1	XT1 "PE"	PE-bus
2		
3		
4		
5		
6		
7		

K24
K16
K21
K25
K26
K27
K28

To "PE" term. of solar PV panel string 4
To "PE" term. of solar PV panel string 3
To "PE" term. of solar PV panel string 2
To "PE" term. of solar PV panel string 1

A3 1000V DC Combiner Box 4 In 2 Out BHS-4-2 (ZJBeny)

Cont.	Circuit
1	F1.1 "In+:
2	F1.3 "In-:
3	F2.1 "In+:
4	F2.3 "In-:

Circuit	Cont.
QS1:OUT+	6
QS1:OUT-	7
QS2:OUT+	8
QS2:OUT-	9
XT1:PE	5

K12
K13
K14
K15

To solar PV panel strings 1-2

K4
K5
K6
K7
K16

A4 1000V DC Combiner Box 4 In 2 Out BHS-4-2 (ZJBeny)

Cont.	Circuit
1	F1.1 "In+:
2	F1.3 "In-:
3	F2.1 "In+:
4	F2.3 "In-:

Circuit	Cont.
QS1:OUT+	6
QS1:OUT-	7
QS2:OUT+	8
QS2:OUT-	9
XT1:PE	5

K17
K18
K19
K20

To solar PV panel strings 3-4

K8
K9
K10
K11
K21

Resposible dept.	Technical reference	Document types: External Electrical Connection Diagram	Document status
VOLTS energy storage	Created by: Sample	Title: PV-STATION AND ESS VOLTS MAX 50kW 71kWh INSTALLATION	Address
	Approved by: Sample	Rev: 1 / Date of issue: Sample date / Lang / Sheet: 1/2	

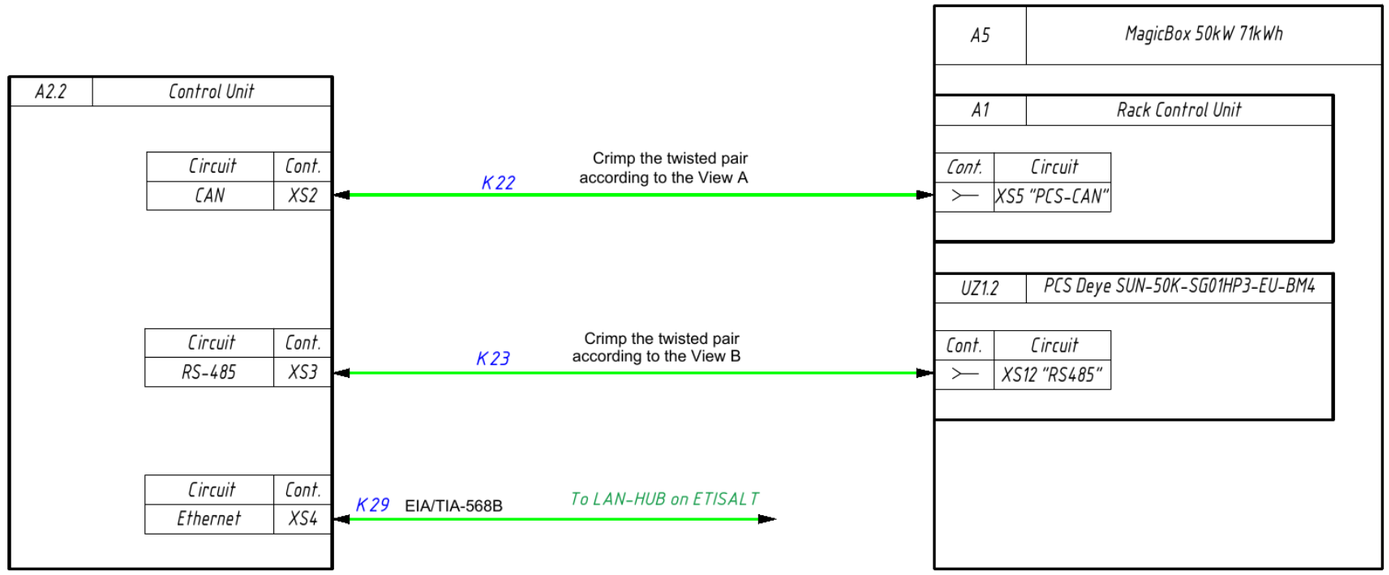

A

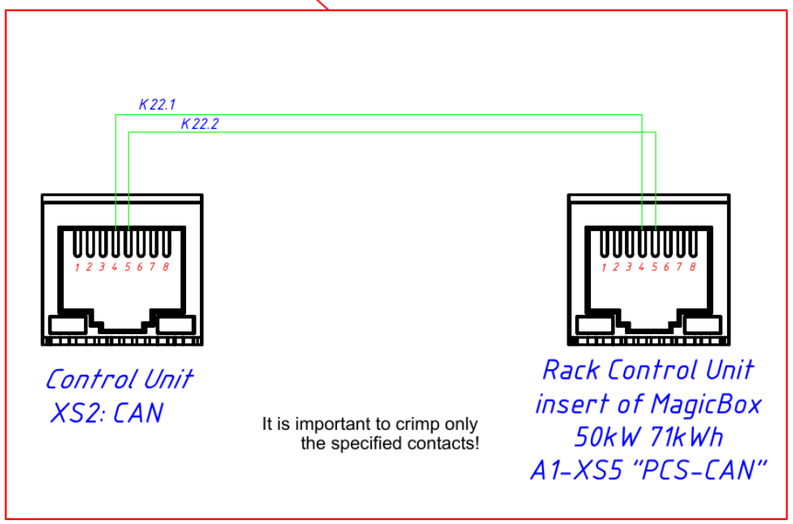

B

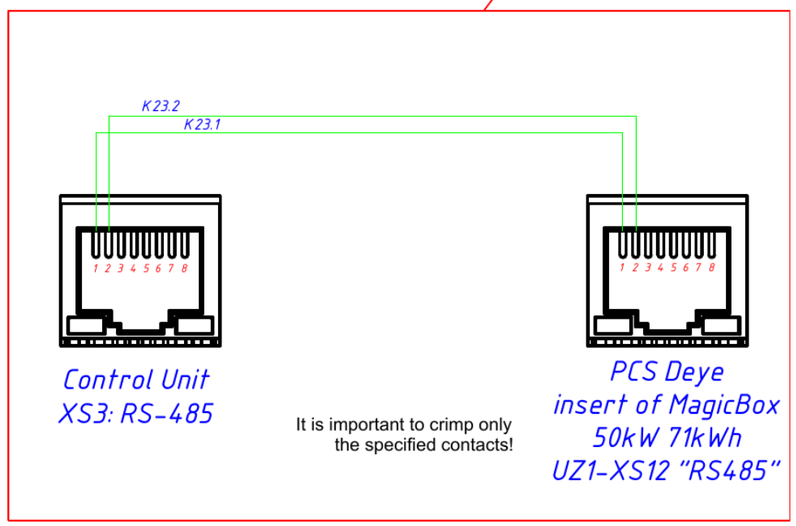

Resposible dept.	Technical reference	Document types External Electrical Connection Diagram	Document status
VOLTS energy storage	Created by Sample	Title PV-STATION AND ESS VOLTS MAX 50kW 71kWh INSTALLATION	Address
	Approved by Sample	Rev: 1 / Date of issue: Sample date / Lang / Sheet: 2/2	

Wire designation	Where does it come from	Where does it go	Note
K1.1	A1-QS1:L1	A2-XT1.1 "1L1"	Brown wire of Cable H07RN-F 5x25 mm2
K1.2	A1-QS1:L2	A2-XT1.2 "1L2"	Black wire of Cable H07RN-F 5x25 mm2
K1.3	A1-QS1:L3	A2-XT1.3 "1L3"	Grey wire of Cable H07RN-F 5x25 mm2
K1.4	A1-Geniral N-bus	A2-XT2 "N"	Blue wire of Cable H07RN-F 5x25 mm2
K1.5	A1-Geniral PE-bus	A2-XT3 "PE"	Yellow/green wire of Cable H07RN-F 5x25 mm2
K2.1	A1-Load:L1	A2-XT1.4 "2L1"	Brown wire of Cable H07RN-F 4x25 mm2
K2.2	A1-Load:L2	A2-XT1.5 "2L2"	Black wire of Cable H07RN-F 4x25 mm2
K2.3	A1-Load:L3	A2-XT1.6 "2L3"	Grey wire of Cable H07RN-F 4x25 mm2
K3.1	A5-UZ1-LOAD:R	A2-XT1.7 "L1-out"	Brown wire of Cable H07RN-F 5x25 mm2
K3.2	A5-UZ1-LOAD:S	A2-XT1.8 "L2-out"	Black wire of Cable H07RN-F 5x25 mm2
K3.3	A5-UZ1-LOAD:T	A2-XT1.9 "L3-out"	Grey wire of Cable H07RN-F 5x25 mm2
K3.4	A5-UZ1-LOAD:N	A2-XT2 "N"	Blue wire of Cable H07RN-F 5x25 mm2
K3.5	A5-UZ1-PE-BAR	A2-XT3 "PE"	Yellow/green wire of Cable H07RN-F 5x25 mm2
K4	A5-UZ1-PV1:+	A3-QS1:OUT+	PV Cable PV1-F 4mm2 Red
K5	A5-UZ1-PV1:-	A3-QS1:OUT-	PV Cable PV1-F 4mm2 Black
K6	A5-UZ1-PV2:+	A3-QS2:OUT+	PV Cable PV1-F 4mm2 Red
K7	A5-UZ1-PV2:-	A3-QS2:OUT-	PV Cable PV1-F 4mm2 Black
K8	A5-UZ1-PV3:+	A4-QS1:OUT+	PV Cable PV1-F 4mm2 Red
K9	A5-UZ1-PV3:-	A4-QS1:OUT-	PV Cable PV1-F 4mm2 Black
K10	A5-UZ1-PV4:+	A4-QS2:OUT+	PV Cable PV1-F 4mm2 Red
K11	A5-UZ1-PV4:-	A4-QS2:OUT-	PV Cable PV1-F 4mm2 Black

Resposible dept.	Technical reference	Document types	Document status
VOLTS energy storage	Created by: Sample	Title: PV-STATION AND ESS VOLTS MAX 50kW 71kWh INSTALLATION	Address
	Approved by: Sample	Rev: 1	Date of issue: Sample date
			Lang
			Sheet: 1/2

External Connections Table

Wire designation	Where does it come from	Where does it go	Note
K12	A3-F1.1 "In+ "	PV-solar string 1 "+ "	PV Cable PV1-F 4mm2 Red
K13	A3-F1.3 "In+ "	PV-solar string 1 "- "	PV Cable PV1-F 4mm2 Black
K14	A3-F2.1 "In+ "	PV-solar string 2 "+ "	PV Cable PV1-F 4mm2 Red
K15	A3-F2.3 "In+ "	PV-solar string 2 "- "	PV Cable PV1-F 4mm2 Black
K16	A3-XT1:PE	A5-XT1:PE	Cable H07V-K 6 mm² Green/Yellow
K17	A4-F1.1 "In+ "	PV-solar string 3 "+ "	PV Cable PV1-F 4mm2 Red
K18	A4-F1.3 "In+ "	PV-solar string 3 "- "	PV Cable PV1-F 4mm2 Black
K19	A4-F2.1 "In+ "	PV-solar string 3 "+ "	PV Cable PV1-F 4mm2 Red
K20	A4-F2.3 "In+ "	PV-solar string 3 "- "	PV Cable PV1-F 4mm2 Black
K21	A4-XT1:PE	A5-XT1:PE	Cable H07V-K 6 mm² Green/Yellow
K22.1	A2-XS2:4 "CAN-H"	A5-A1-XS5:4 "PCS-CAN-H"	White-orange wire of Cable F/UTP/4P Cat6.e Solid in PVH
K22.2	A2-XS2:5 "CAN-L"	A5-A1-XS5:5 "PCS-CAN-L"	Orange wire of Cable F/UTP/4P Cat6.e Solid in PVH
K23.1	A2-XS3:1 "RS485-B"	A5-UZ1-XS12:1 "RS485-B"	White-orange wire of Cable F/UTP/4P Cat6.e Solid in PVH
K23.2	A2-XS3:2 "RS485-A"	A5-UZ1-XS12:2 "RS485-A"	Orange wire of Cable F/UTP/4P Cat6.e Solid in PVH
K24	A5-XT1:PE	A5-UZ1-PE-BAR	Cable H07V-K 25 mm² Green/Yellow
K25	A5-XT1:PE	To "PE" term. of solar PV panel string 1	Cable H07V-K 6 mm² Green/Yellow
K26	A5-XT1:PE	To "PE" term. of solar PV panel string 2	Cable H07V-K 6 mm² Green/Yellow
K27	A5-XT1:PE	To "PE" term. of solar PV panel string 3	Cable H07V-K 6 mm² Green/Yellow
K28	A5-XT1:PE	To "PE" term. of solar PV panel string 4	Cable H07V-K 6 mm² Green/Yellow
K29	A2-XS4 "Ethernet"	To LAN-HUB on ETISALT	EIA/TIA-568B standart connection of Cable F/UTP/4P Cat6.e Solid in PVH

Resposible dept.	Technical reference	Document types	Document status
VOLTS energy storage	Created by: Sample Approved by: Sample	Title: PV-STATION AND ESS VOLTS MAX 50kW 71kWh INSTALLATION	Address
			Rev: 1 | Date of issue: Sample date | Lang | Sheet: 2/2

External Connections Table

Position	Name and Technical data	Supplier	Unit of measurement	Quantity
1	2	3	4	5
1	Equipment			
	MagicBox 50kW 71kWh	Volts UAE	pcs	1
	Control Unit VOLTS	Volts UAE	pcs	1
	1000V DC Combiner Box 4 In 2 Out BHS-4-2	ZJBENY	pcs	2
	Solar panel JKM590N-72HL4-BDV 590 Watt	Jinko Solar	pcs	45
2	Cable and wire products			
	Cable H07RN-F 5x25 mm^2		m	13
	Cable H07RN-F 4x25 mm^2		m	1
	Cable F/UTP/4P Cat6.e Solid in PVH		m	31
	PV Cable PV1-F 4mm2 Red		m	92
	PV Cable PV1-F 4mm2 Black		m	120
	Cable H07V-K 6 mm^2 Yellow/Green		m	98
3	Systems for laying cables			
	PMA Flexible Conduit, 40mm Nominal Diameter, Plastic, Black		m	3
	PMA Flexible Conduit, 20mm Nominal Diameter, Plastic, Black		m	32
	50x150x1.2 Cable Tray		m	50
	50x150x1.2 Cover		m	50
	50x150x1.2 Tee Bend		pcs	3

Resposible dept.	Technical reference	Document types Component and material specification	Document status
VOLTS energy storage	Created by Sample	Title PV-STATION AND ESS VOLTS MAX 50kW 71kWh INSTALLATION	Address
	Approved by Sample	Rev: 1 / Date of issue: Sample date / Lang: / Sheet: 1/3	

Position	Name and Technical data	Supplier	Unit of measurement	Quantity
1	2	3	4	5
	50x150x1.2 Bend 90		pcs	5
	Concrete block 300x150x100 mm		pcs	49
	Concrete block 400x200x200 mm		pcs	6
4	Materials			
	Rj-45 Cat.6e connector		pcs	6
	Bushing Copper Crimp Connectors 25 mm^2		pcs	27
	Bushing Copper Crimp Connectors 6 mm^2		pcs	6
	Annular Copper Crimp Connectors 25 mm^2		pcs	1
	Annular Copper Crimp Connectors 6 mm^2		pcs	84
	Heat shrink tube 16/8 red		m	1
	Heat shrink tube 16/8 yellow		m	1
	Heat shrink tube 16/8 blue		m	1
	Heat shrink tube 16/8 black		m	5
	Heat shrink tube 16/8 green/yellow		m	1
	DIN Rail Terminal Blocks 400A DBL400	TE Connectivity	pcs	1
	Terminal Block WDU 35 1020600000	Weidmuller	pcs	3
	End Cover WAP 16+35 1050160000	Weidmuller	pcs	1
	End Stop WEW 35/2 1061200000	Weidmuller	pcs	2

Resposible dept.	Technical reference	Document types: Component and material specification	Document status
VOLTS energy storage	Created by: Sample	Title: PV-STATION AND ESS VOLTS MAX 50kW 71kWh INSTALLATION	Address
	Approved by: Sample		Rev: 1 / Date of issue: Sample date / Lang / Sheet: 2/3

Position	Name and Technical data	Supplier	Unit of measurement	Quantity
1	2	3	4	5
5	Solar Panel Bracket			
	Mounting rail MR-R-ST 3100 mm	Mibet Energy	pcs	45
	Splice for Pro Standard Rail and Hook Rail MR-SP-ST	Mibet Energy	pcs	32
	Internal clamp 30 mm MR-IC-ST30	Mibet Energy	pcs	80
	End clamp 30 mm MR-EC-ST30	Mibet Energy	pcs	32
	L-type bracket MR-VI-01	Mibet Energy	pcs	112
	Earthing terminal with profile mounting MR-IS-GL	Mibet Energy	pcs	15
	Hexagon socket head cap screws DIN912 - M8x90 - stainless steel A2-70		pcs	112
	Washer DIN125 - A8 - stainless steel A2-70		pcs	224
	Spring lock washers DIN127 - B8 - stainless steel A2-70		pcs	112
	Hexagon nut DIN934 - M8 - stainless steel A2-70		pcs	112
	PV connector MC4-F PV-KBT4/6I-UR		pcs	11
	PV connector MC4-M PV-KST4/6I-UR		pcs	11
	PV module mounting frame F.2-1.24	Volts UAE	pcs	2
	PV module mounting frame F.3-1.24	Volts UAE	pcs	14

Resposible dept.	Technical reference	Document types: Component and material specification	Document status
VOLTS energy storage	Created by: Sample	Title: PV-STATION AND ESS VOLTS MAX 50kW 71kWh INSTALLATION	Address
	Approved by: Sample	Rev: 1 / Date of issue: Sample date / Lang / Sheet: 3/3	

Power connection AC

Information and control

2 cables from ESS on the roof
F/UTP 4P Cat.5e SOLID IN PVH

1 cable from ESS on the roof
CU/XLPE/PVC 5x25mm2

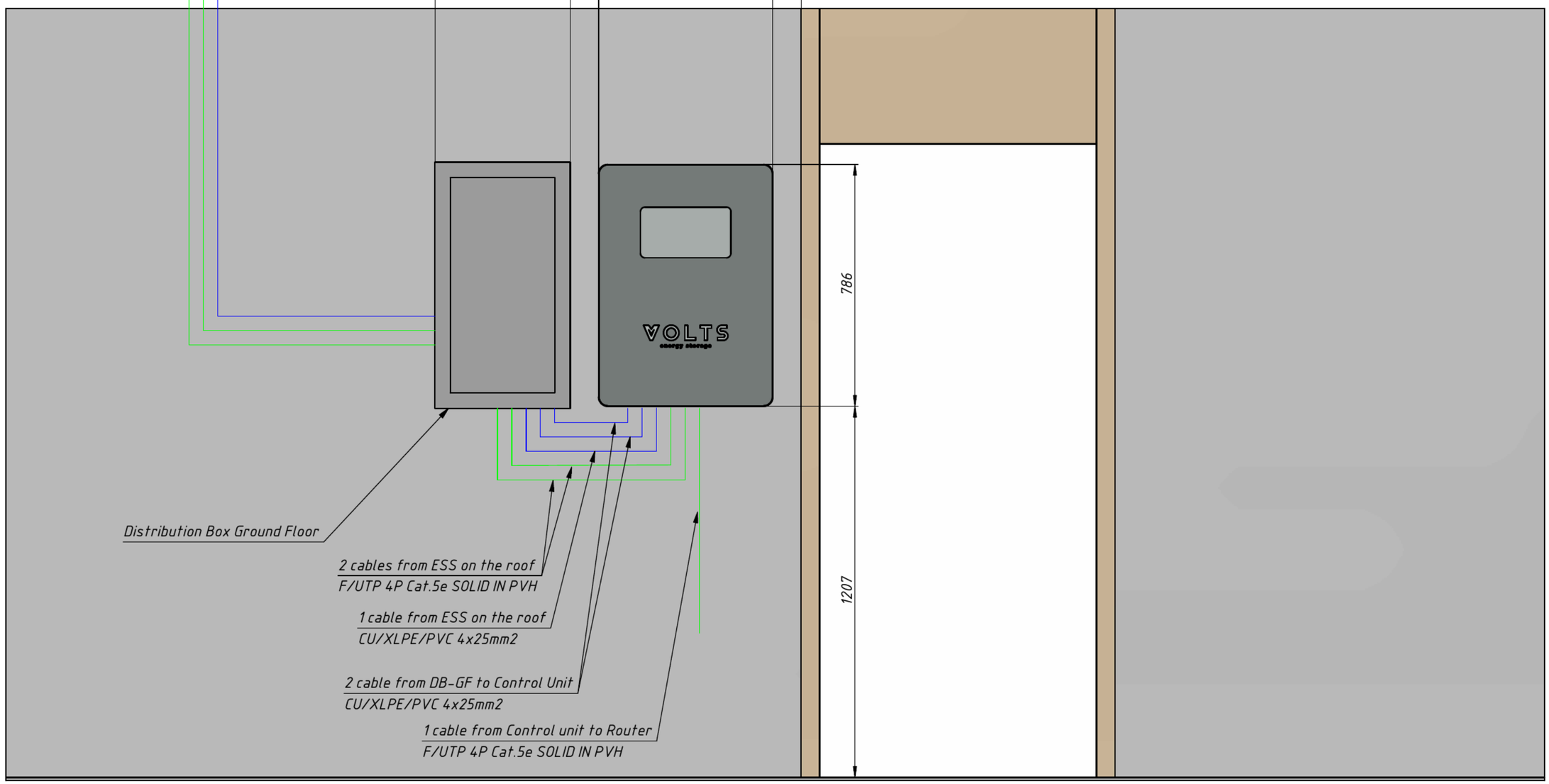

Resposible dept.	Technical reference	Document types	Document status
	Sample	Dimensional drawing and cable route	Released
VOLTS energy storage	Created by: Sample Approved by: Sample	Title: VOLTS Control Unit	

Rev	Date of issue	Lang	Sheet
01	Sample date	en	1/1

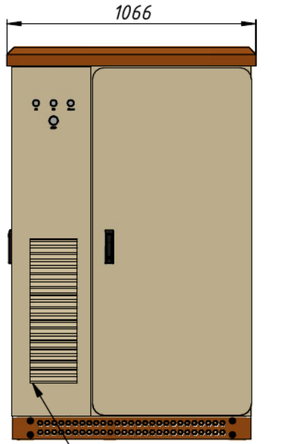

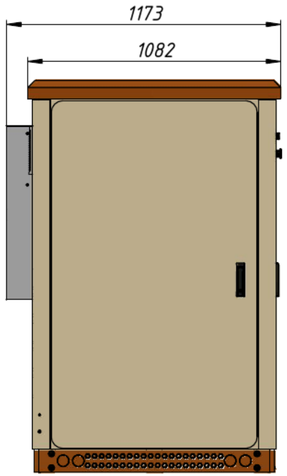

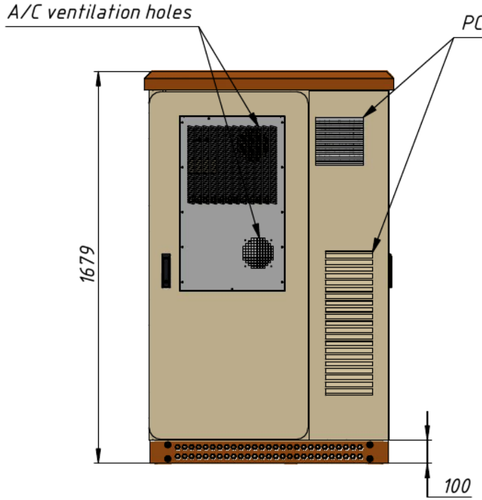

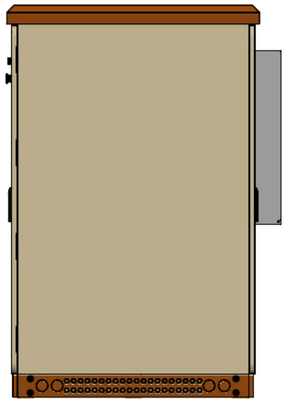

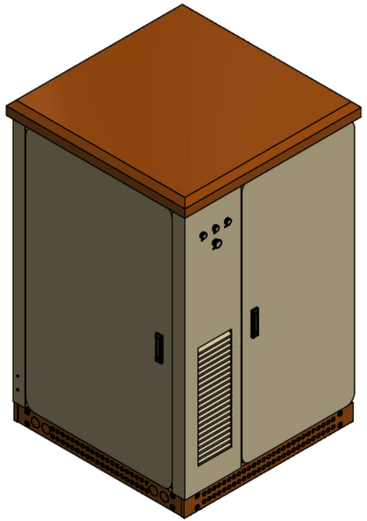

A (Page 2)

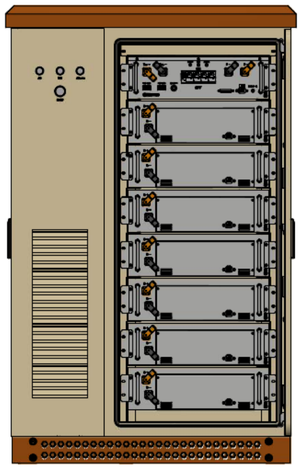

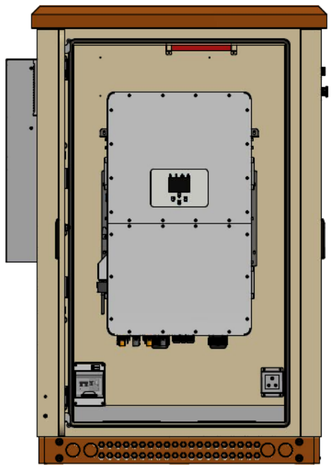

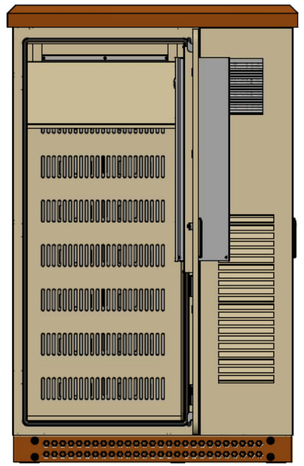

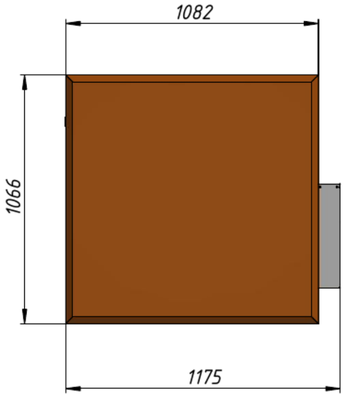

1. Approximate weight when assembled - 1100 kg.
2. Range of working temperature: -20~50°C.
3. Protaction: IP55.
4. Main scale: 1:17.5.

Resposible dept.	Technical reference	Document types Dimensional drawing	Document status
VOLTS energy storage	Created by Sample	Title MagicBox 50kW 71kWh	VOLTS MAX 50kW 71kWh
	Approved by Sample		Rev 1 · Date of issue Sample date · Lang · Sheet 1/2

A (1 : 10)

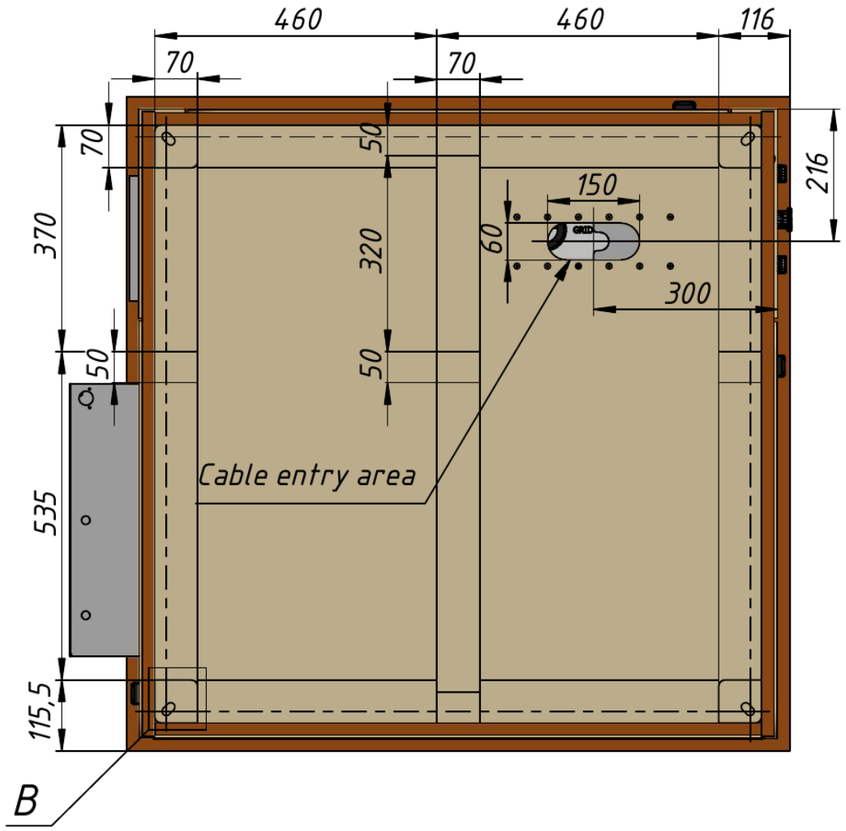

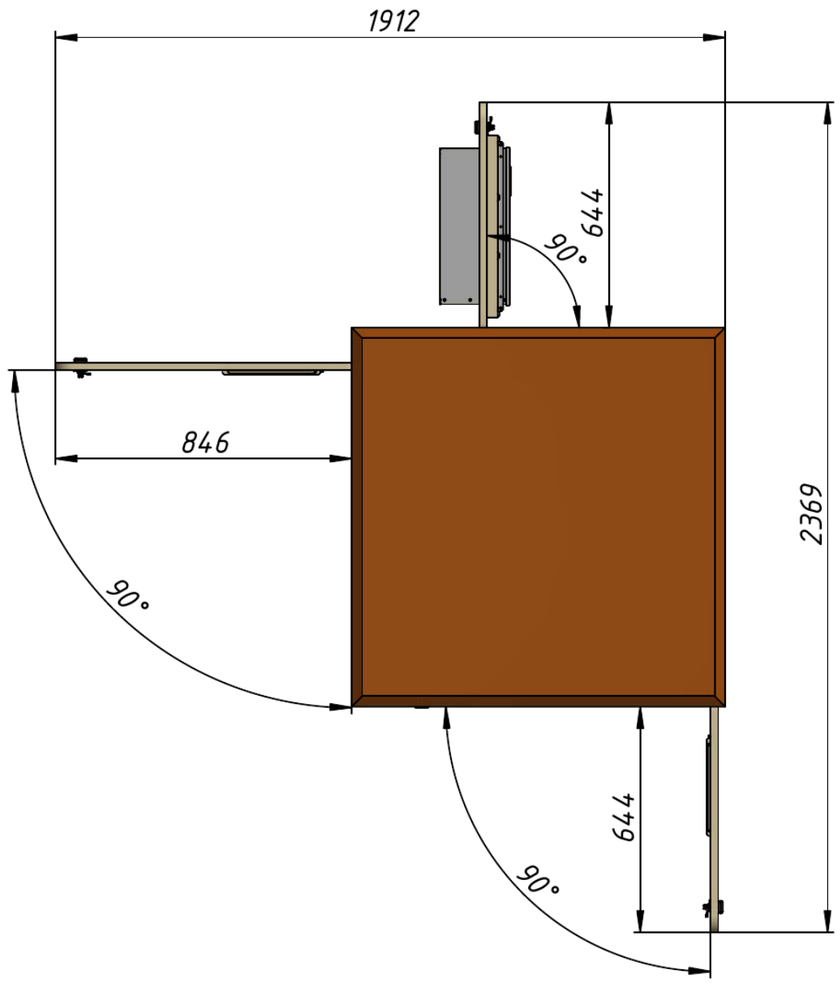

B (1 : 2)

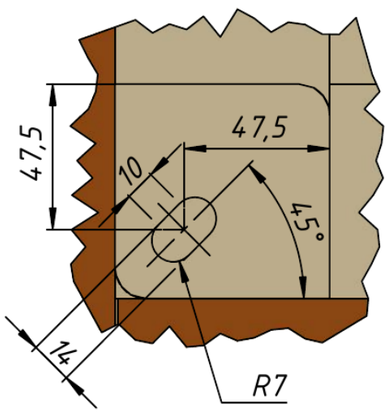

Resposible dept.	Technical reference	Document types Dimensional drawing	Document status
VOLTS energy storage	Created by Sample	Title MagicBox 50kW 71kWh	VOLTS MAX 50kW 71kWh
	Approved by Sample		Rev: 1 · Date of issue: Sample date · Lang: · Sheet: 2/2

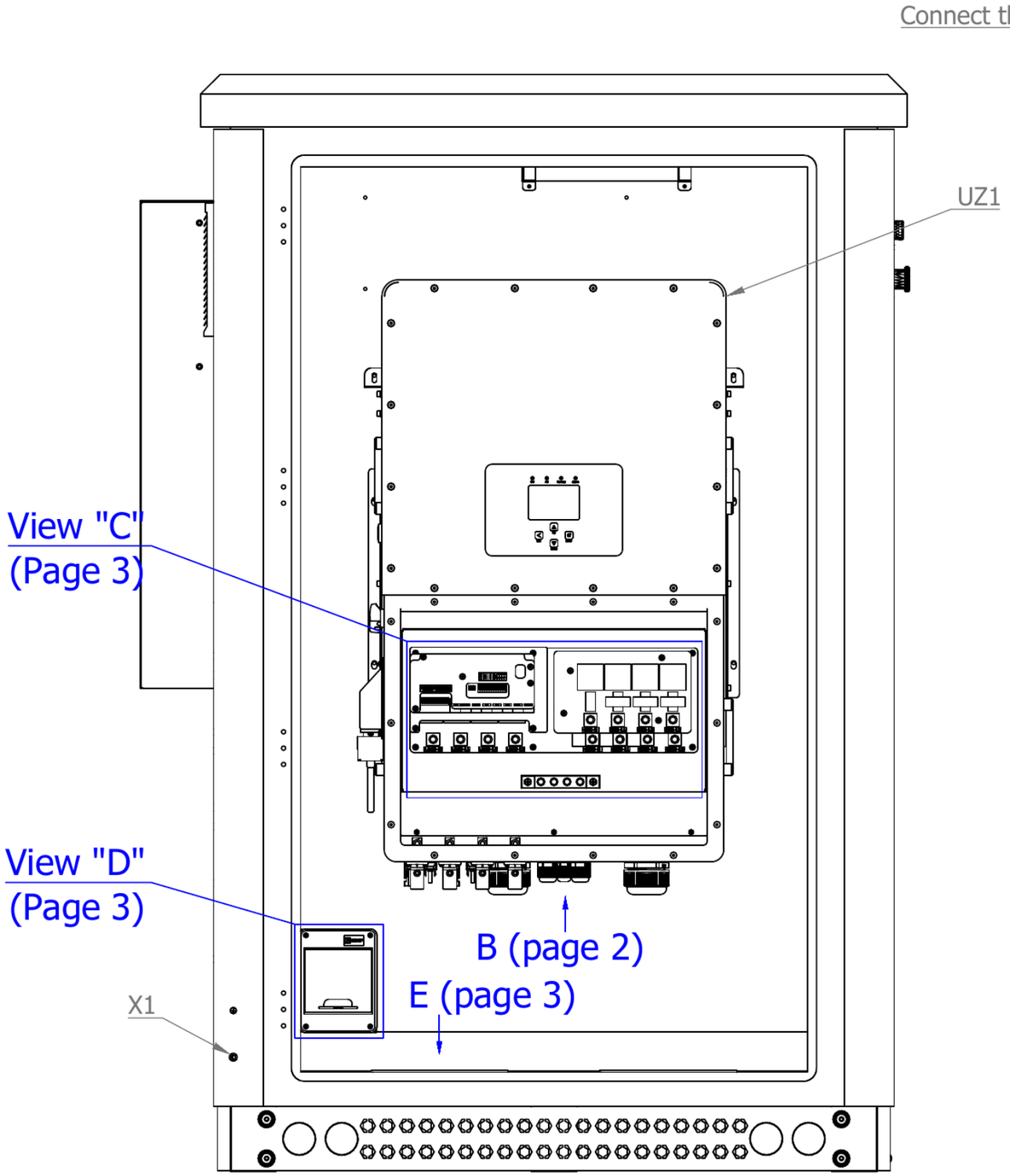

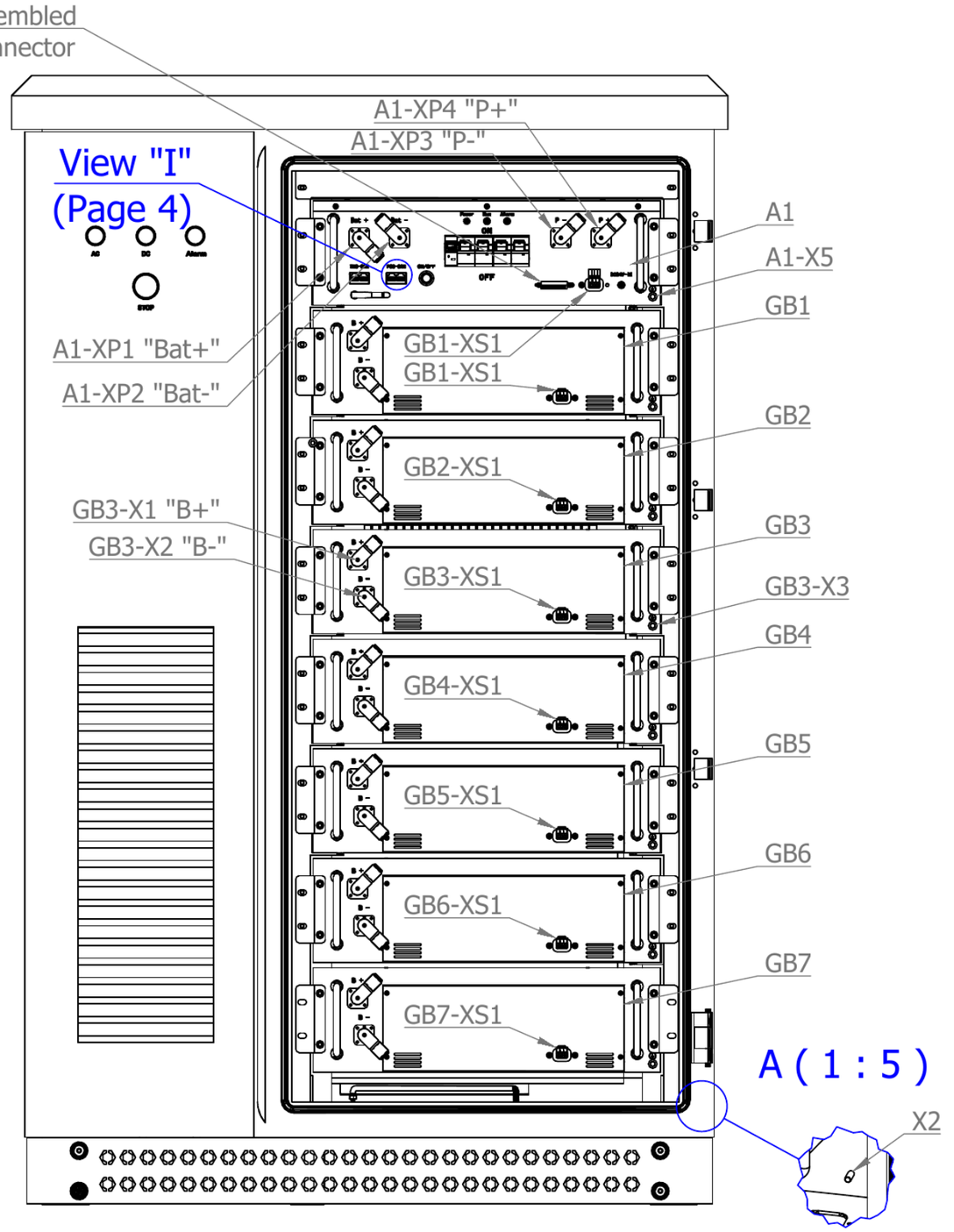

Resposible dept.	Technical reference	Document types Terminal Connection Drawing	Document status	
VOLTS energy storage	Created by Sample	Title MagicBox 50kW 71kWh	VOLTS MAX 50kW 71kWh	
	Approved by Sample		Rev 1	Date of issue Sample date
			Lang	Sheet 1/4

B (1 : 3)

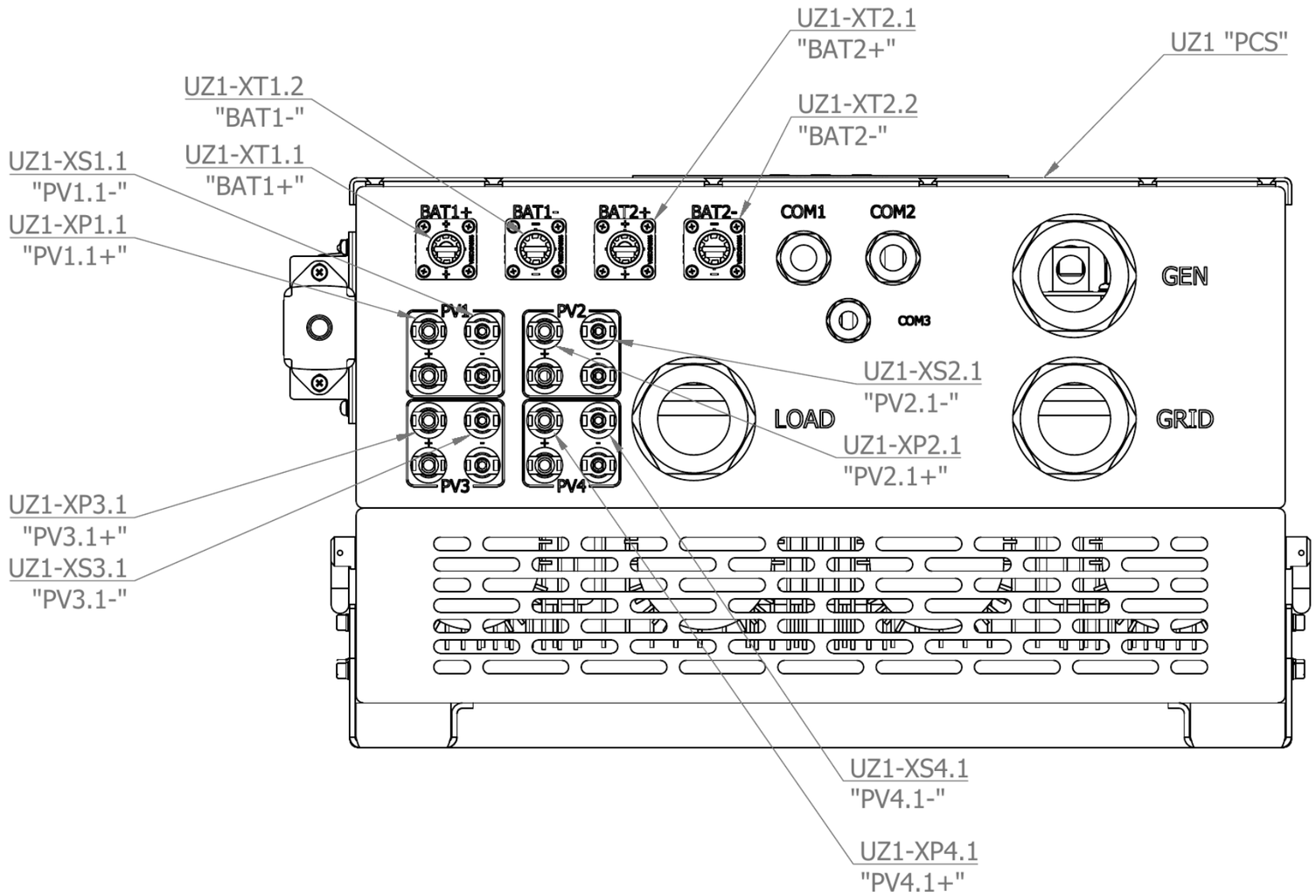

E (1 : 3)

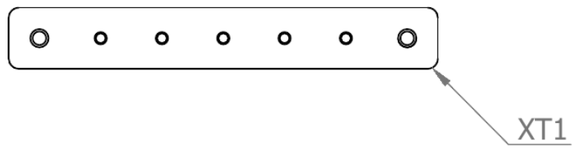

Resposible dept.	Technical reference	Document types Terminal Connection Drawing	Document status			
VOLTS energy storage	Created by Sample	Title MagicBox 50kW 71kWh	VOLTS MAX 50kW 71kWh			
	Approved by Sample		Rev 1	Date of issue Sample date	Lang	Sheet 2/4

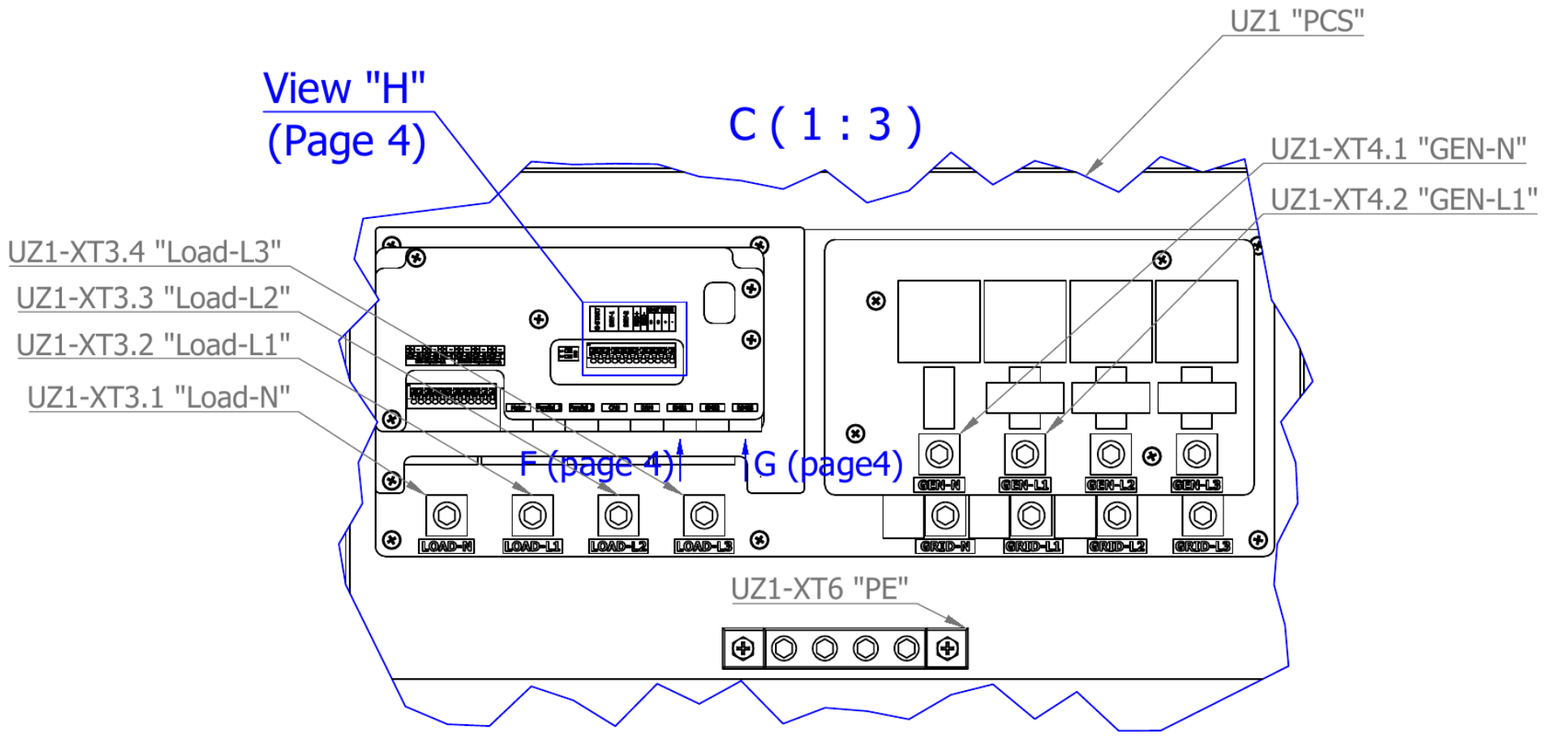

Resposible dept.	Technical reference	Document types Terminal Connection Drawing	Document status	
VOLTS energy storage	Created by Sample	Title MagicBox 50kW 71kWh	VOLTS MAX 50kW 71kWh	
	Approved by Sample		Rev 1	Date of issue Sample date	Lang	Sheet 3/4

F (2 : 1)

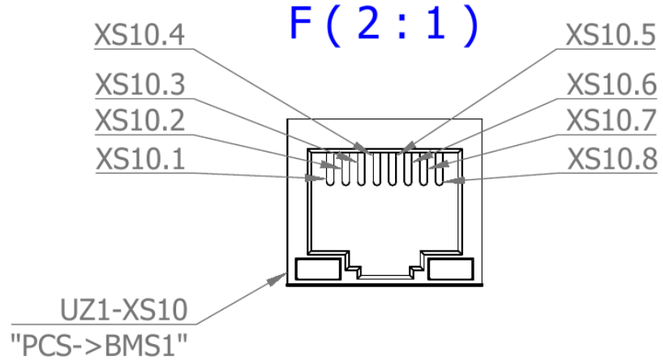

H (2 : 1)

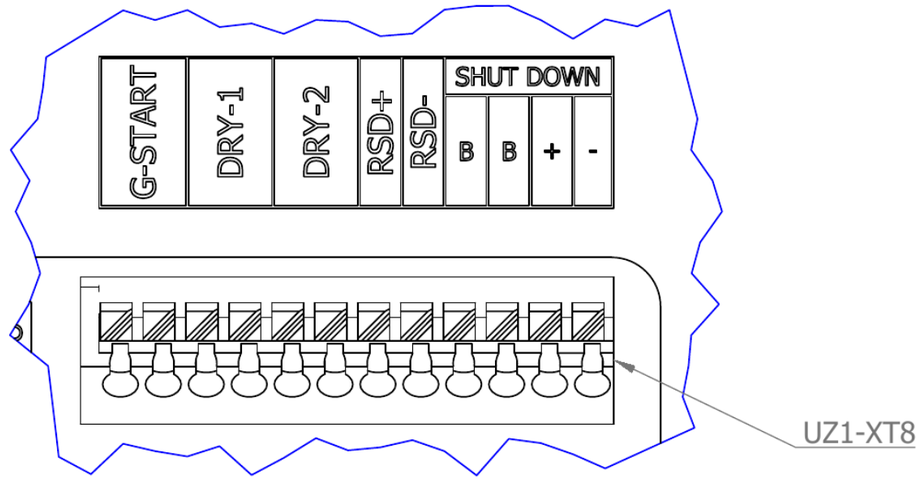

I (2 : 1)

G (2 : 1)

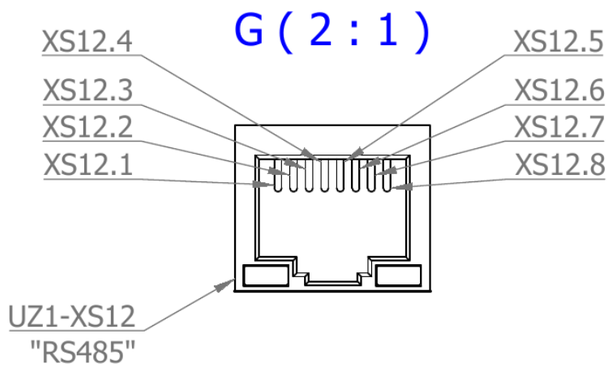

Resposible dept.	Technical reference	Document types Terminal Connection Drawing	Document status	
VOLTS energy storage	Created by Sample	Title MagicBox 50kW 71kWh	VOLTS MAX 50kW 71kWh	
	Approved by Sample		Rev 1	Date of issue Sample date
			Lang	Sheet 4/4

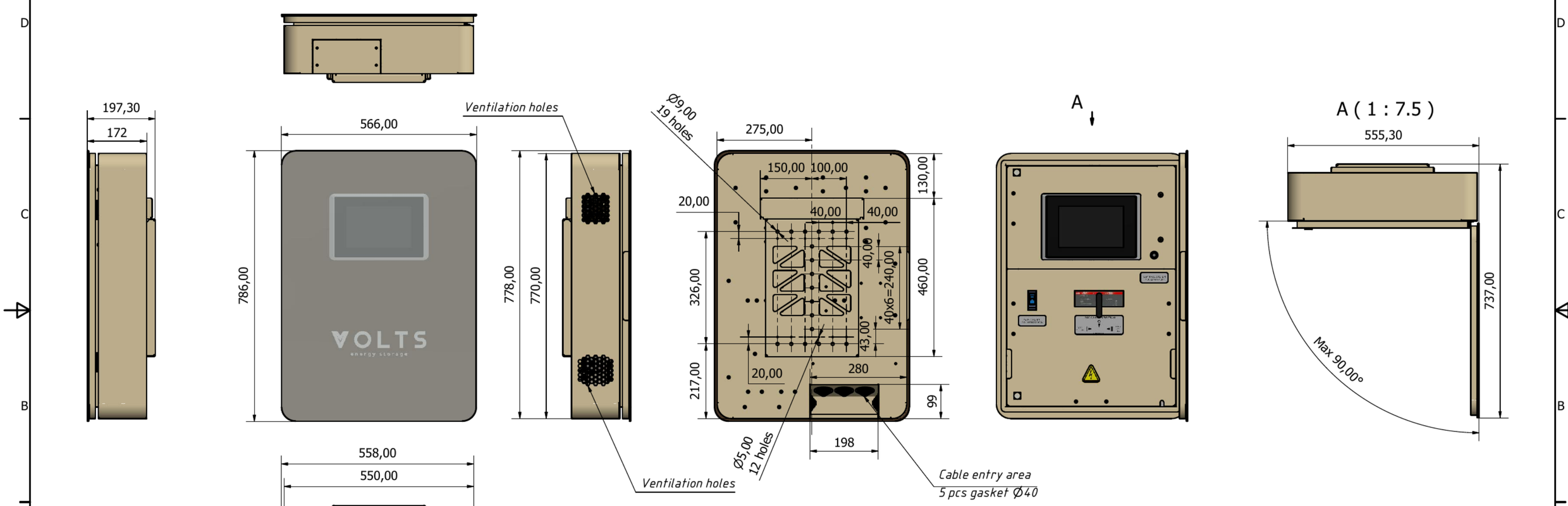

1. Net weight - 44.2 kg.
2. Range of working temperature: 0~40°C.
3. Protaction: IP41.
4. Main scale: 1:7.5.

Resposible dept.	Technical reference	Document types: Dimensional drawing	Document status
VOLTS energy storage	Created by: Sample	Title: Control Unit	VOLTS MAX 50kW 71kWh
	Approved by: Sample		Rev / Date of issue: Sample date / Lang / Sheet: 1/1

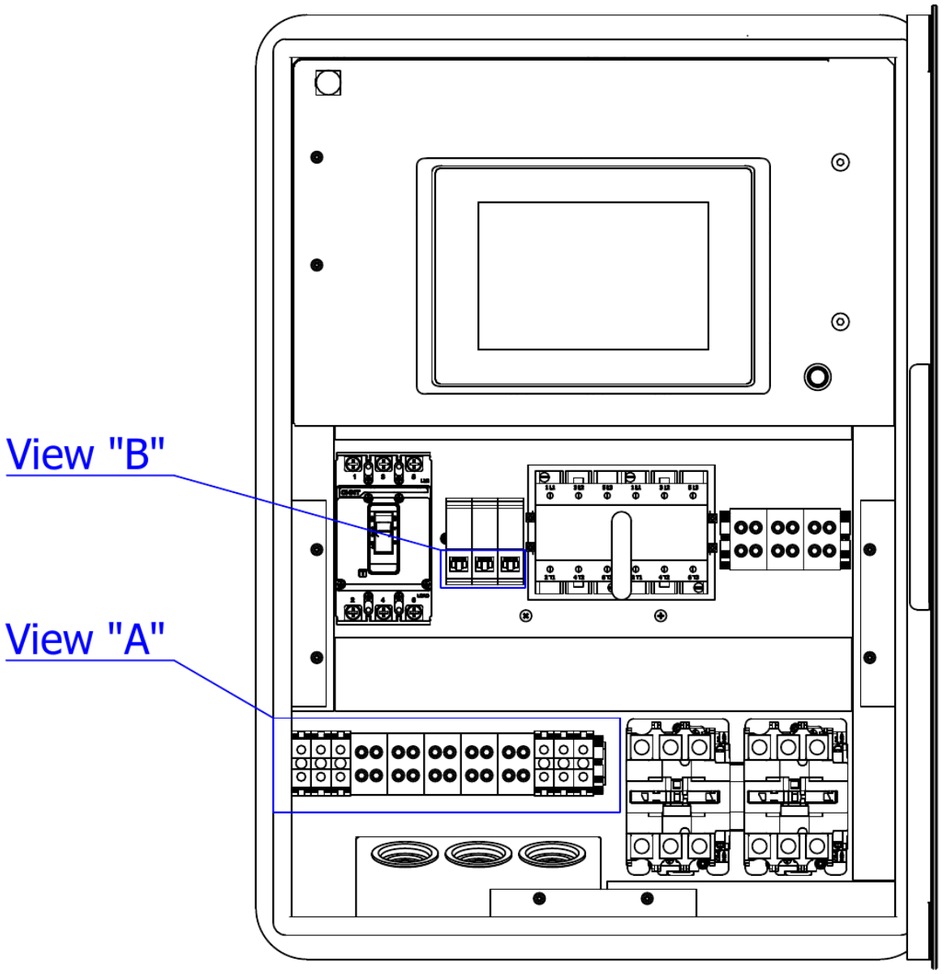

A (1 : 2)

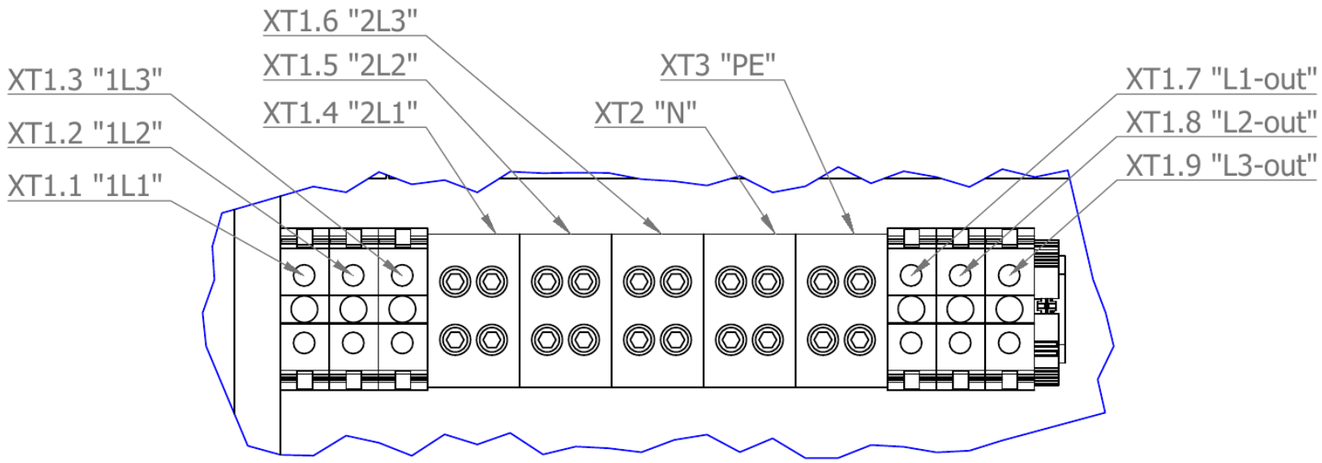

B (1 : 1)

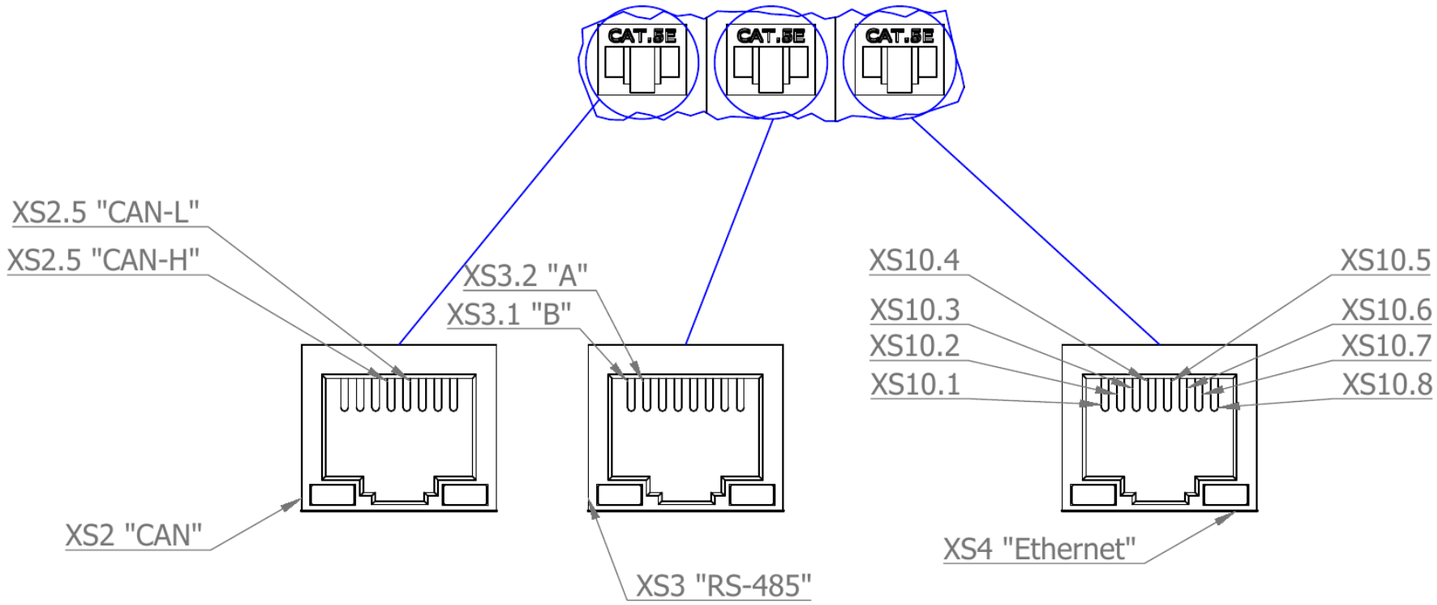

Resposible dept.	Technical reference	Document types	Document status	
VOLTS energy storage	Created by: Sample	Terminal Connection Drawing		
	Approved by: Sample	Title: Control Unit VOLTS	VOLTS MAX 50kW 71kWh	
			Rev: 1	Date of issue: Sample date
			Lang:	Sheet: 1/1

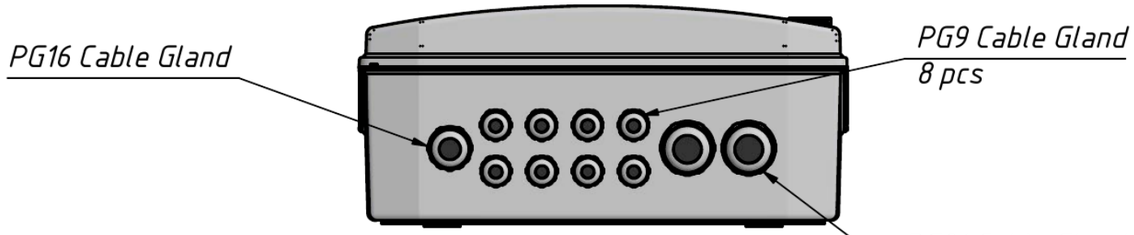

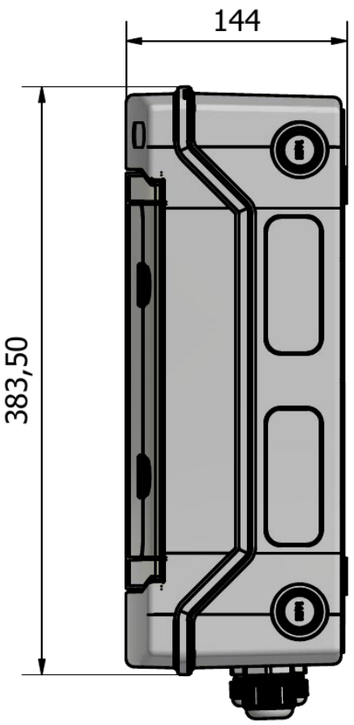

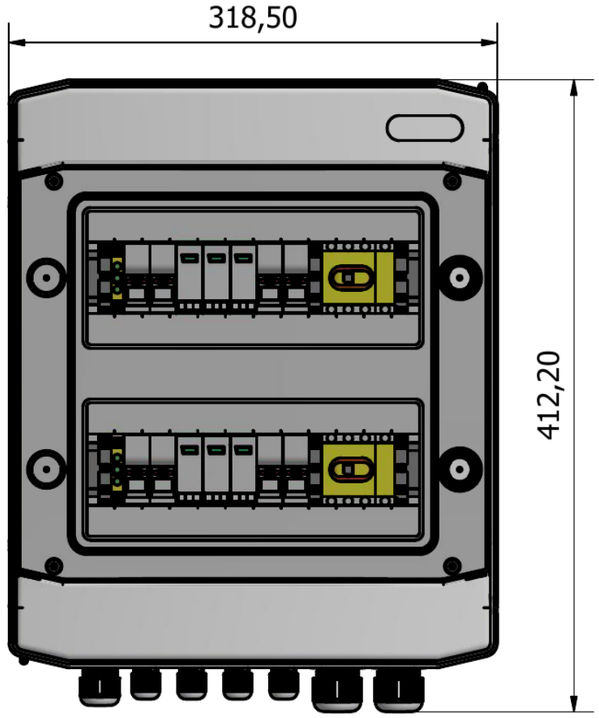

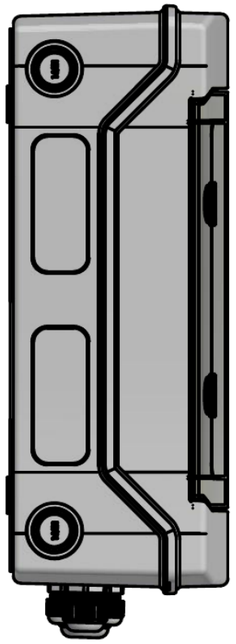

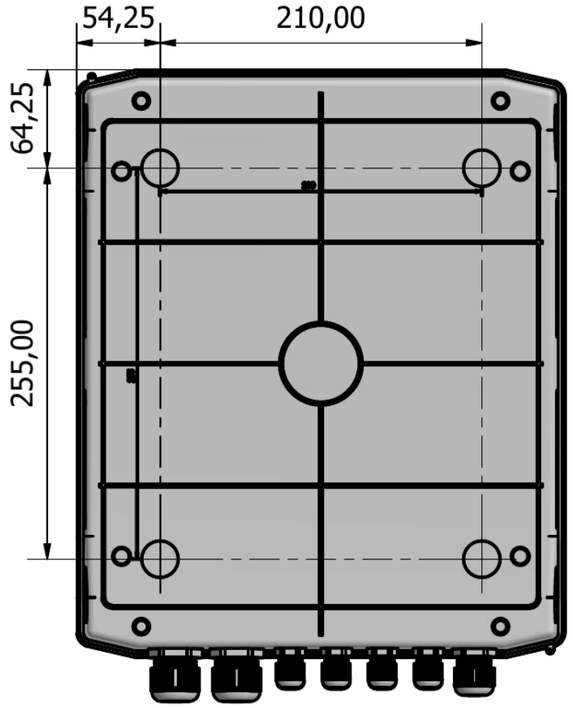



1. Net weight - 4 kg.
2. Range of working temperature: -20~60°C.
3. Protaction: IP65.
4. Main scale: 1:4.

Resposible dept.	Technical reference	Document types	Document status
VOLTS energy storage	Created by: Sample	Dimensional drawing	
	Approved by	Title: 1000V DC Combiner Box 4 In 2 Out BHS-4-2 (ZJBeny)	Standard Solution
		Rev	Date of issue: Sample date
		Lang	
		Sheet: 1/1	

View "A"

View "B"

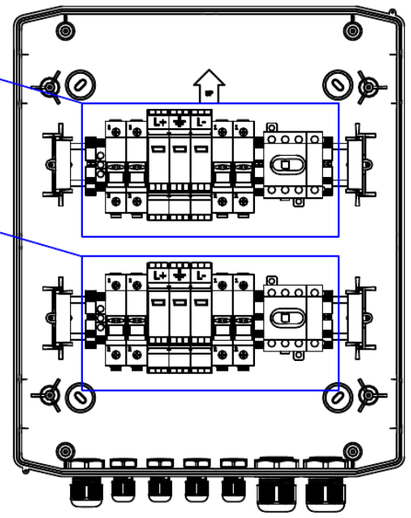

A (1 : 1)

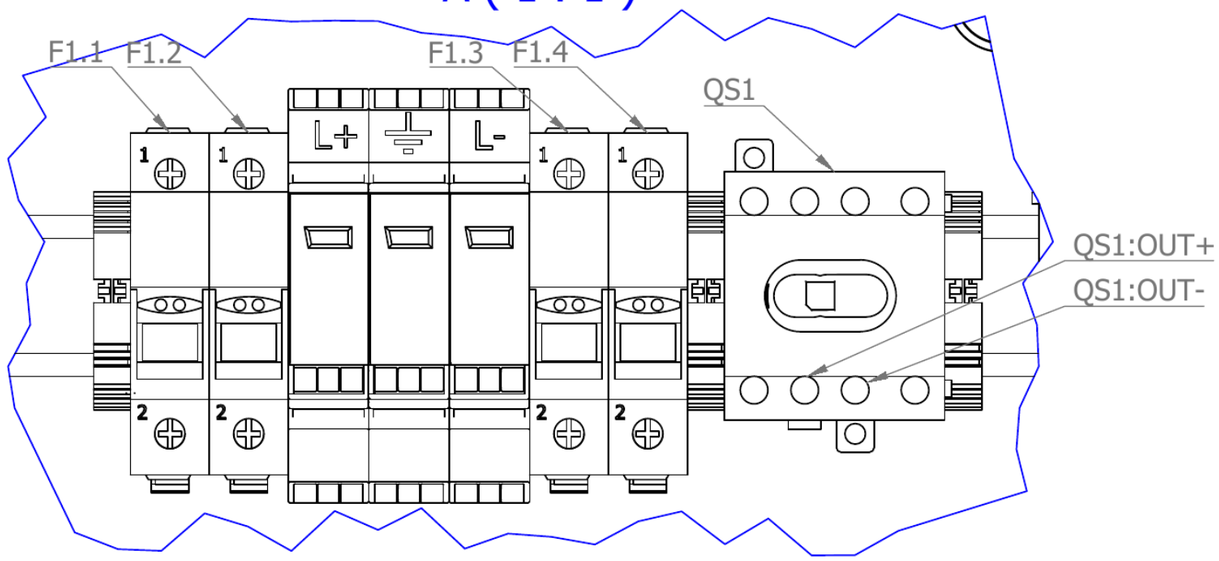

B (1 : 1)

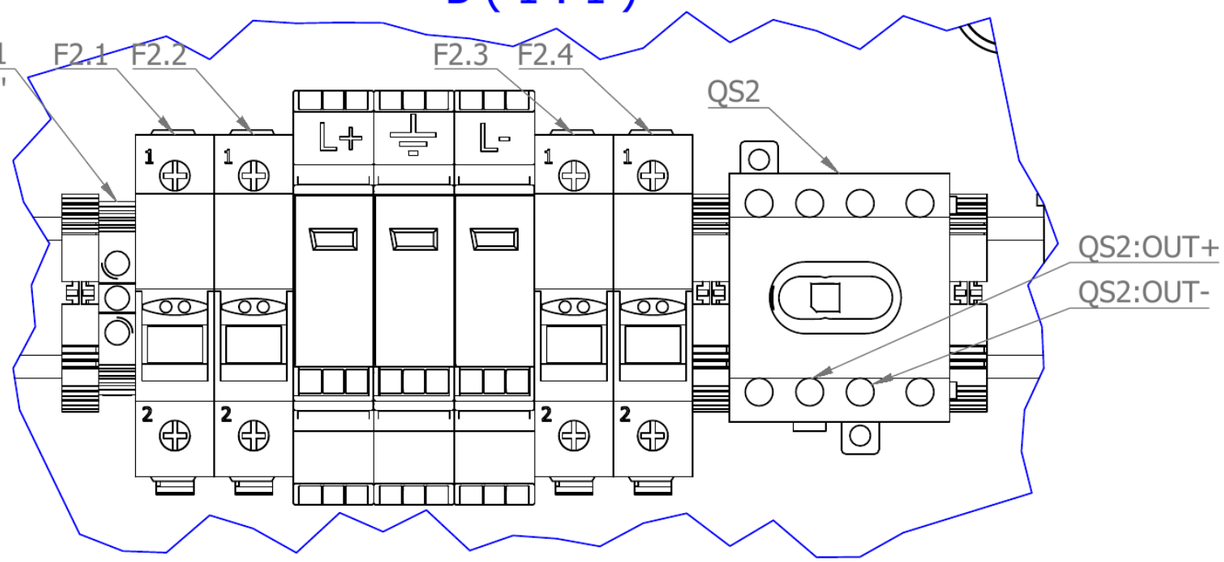

Resposible dept.	Technical reference	Document types Terminal Connection Drawing	Document status	
VOLTS energy storage	Created by Sample	Title 1000V DC Combiner Box 4 In 2 Out BHS-4-2 (ZJBeny)	VOLTS MAX 50kW 71kWh	
	Approved by Sample		Rev 1	Date of issue Sample date
			Lang	Sheet 1/1

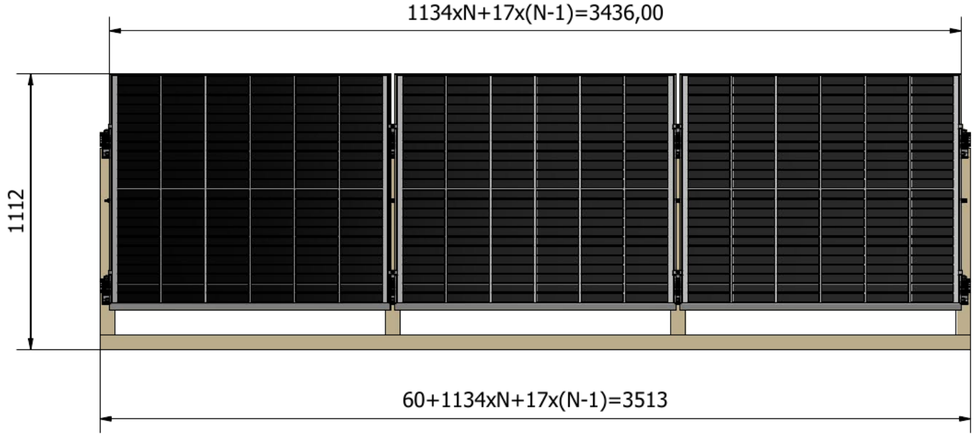

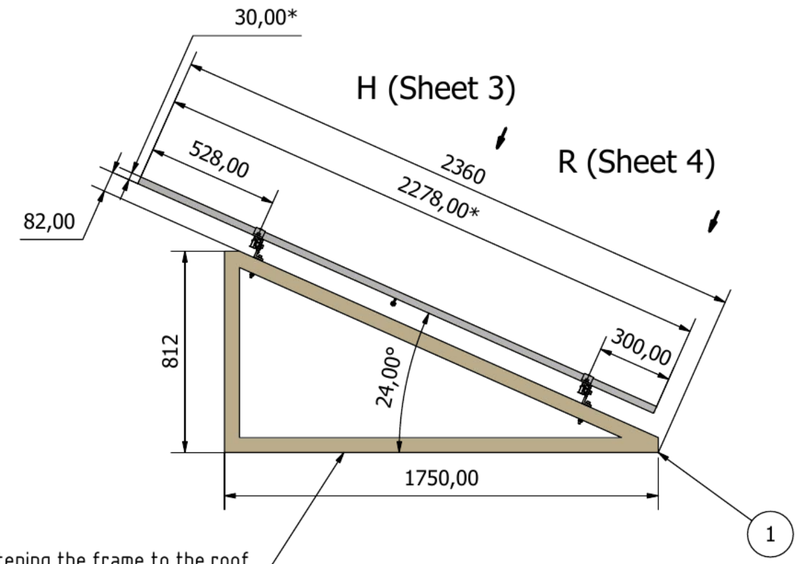

The mechanisms for fastening the frame to the roof must be provided in an individual project

A

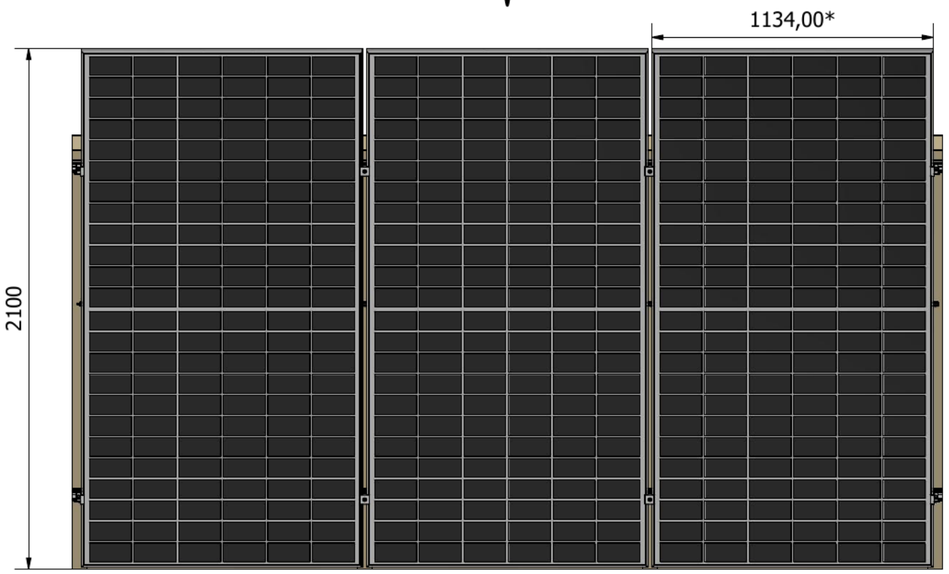

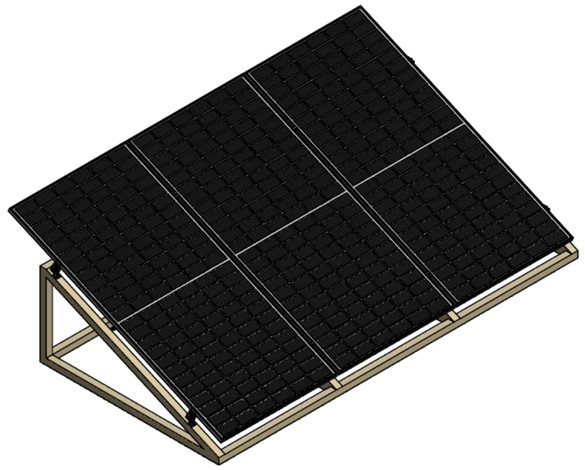

B (Sheet 2)

A (1 : 17.5)

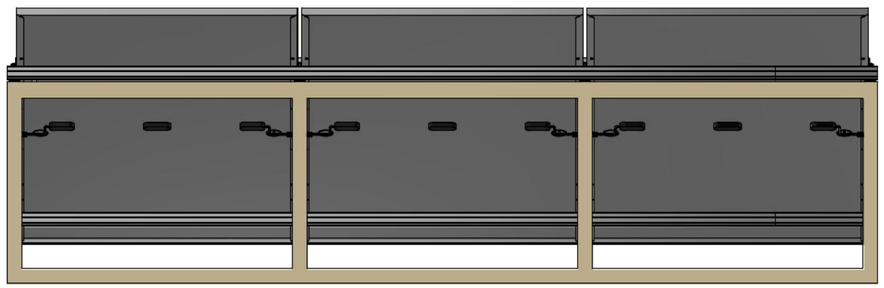

Pos.	Name of parts	Qnt.
1	PV module mounting frame F.3-1.24	1
2	Photovoltaic module 72HL4-BDV 590W (Jinko Solar)	3
3	Mounting rail MR-R-ST 3100 mm (Mibet Energy)	4
4	L-type bracket MR-VI-01 (Mibet Energy)	8
5	End clamp 30 mm MR-EC-ST30 (Mibet Energy)	4
6	Hexagon socket head cap screws DIN912 - M8x90 - stainless steel A2-70	8
7	Washer DIN125 - A8 - stainless steel A2-70	16
8	Spring lock washers DIN127 - B8 - stainless steel A2-70	8
9	Hexagon nut DIN934 - M8 - stainless steel A2-70	8
10	Splice for Pro Standard Rail and Hook Rail MR-SP-ST (Mibet Energy)	2
11	Internal clamp 30 mm MR-IC-ST30 (Mibet Energy)	4
12	Earthing terminal with profile mounting MR-IS-GL (Mibet Energy)	1

NOTES:

1. * - sizes for reference.
2. General tolerances according to ISO 2768-1-89: H17, h17, ±IT17/2.
3. Weight: 197,500 кг
4. Main view scale: 1 : 17.5
5. Drawing Sheet Format: A2
6. N - number of PV panel in array
7. The mechanisms for fastening the frame to the roof must be provided in an individual project.

Resposible dept.	Technical reference	Document types: Assembly drawing	Document status
VOLTS energy storage	Created by: Sample	Title: Cascade of PV modules 1x3 psc angle-24 (1 pcs - 590W)	Standard solution
	Approved by: Sample		Rev: 1 · Date of issue: Sample date · Lang · Sheet: 1/4

B (1 : 17.5)

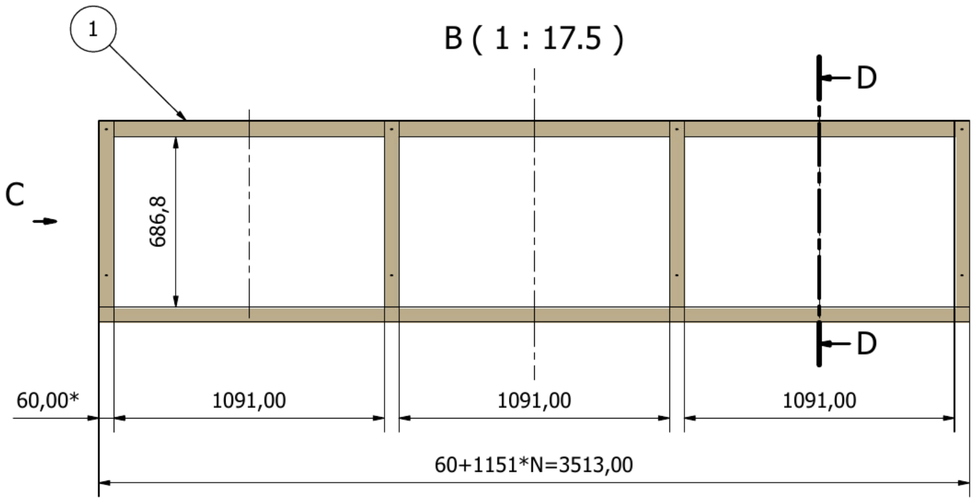

C (1 : 17.5)

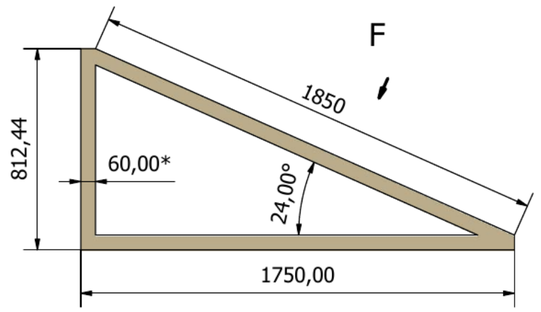

D-D (1 : 17.5)

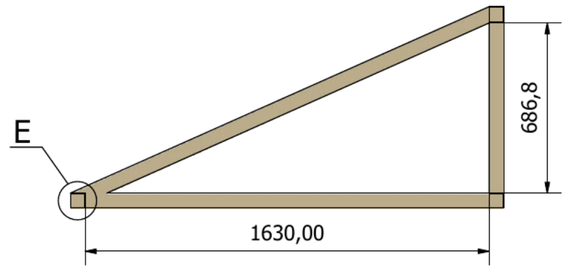

F (1 : 17.5)

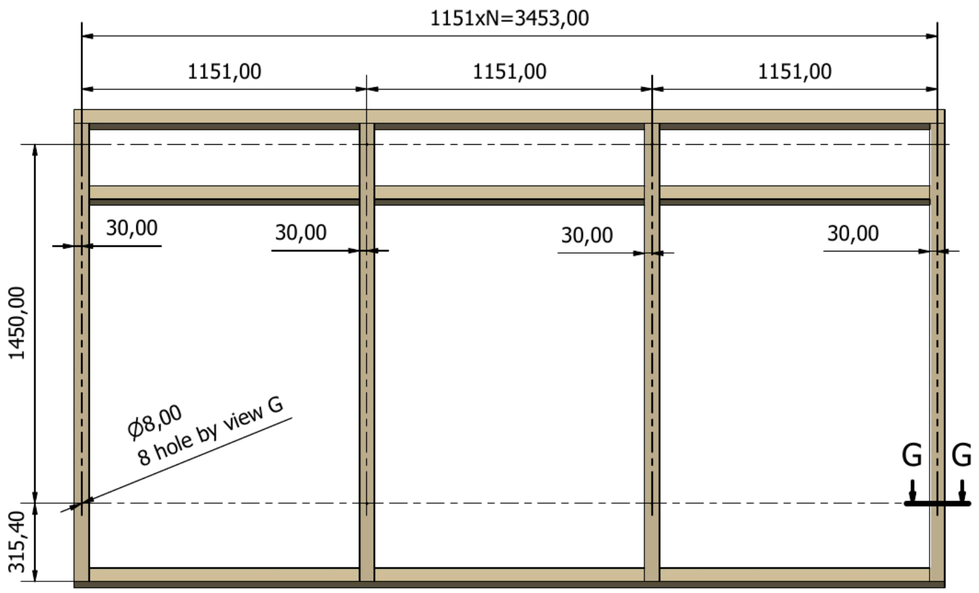

E (1 : 2.5)

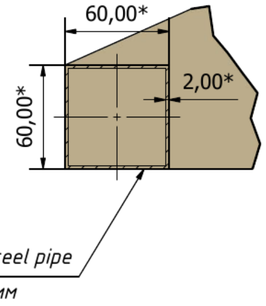

G-G (1 : 2.5)

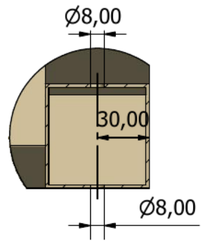

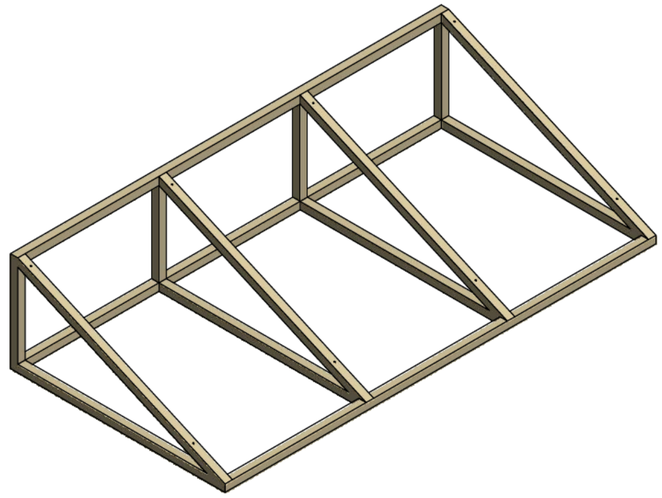

Resposible dept.	Technical reference	Document types Assembly drawing	Document status	
VOLTS energy storage	Created by Sample	Title Cascade of PV modules 1x3 psc angle-24 (1 pcs - 590W)	Standard solution	
	Approved by Sample		Rev 1	Date of issue Sample date
			Lang	Sheet 2/4

H (1 : 17.5)

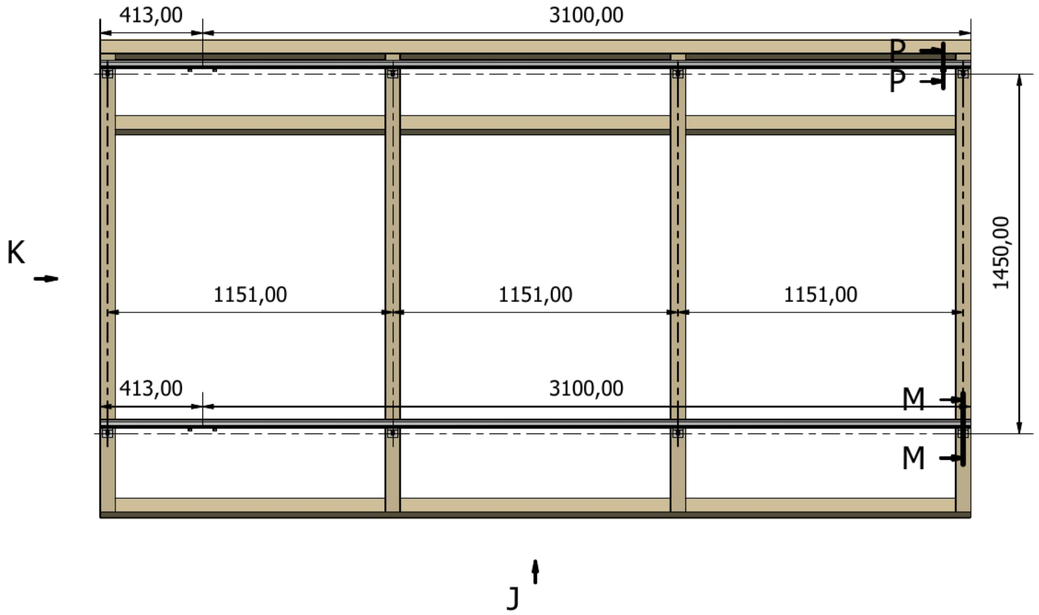

K (1 : 17.5)

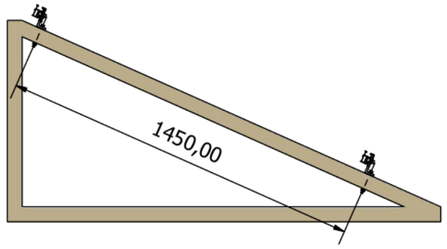

M-M (1 : 2.5)

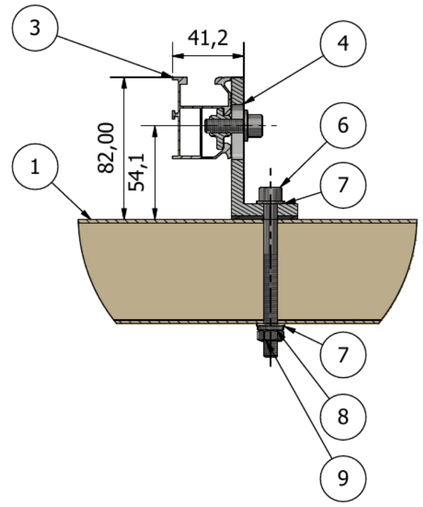

J (1 : 17.5)

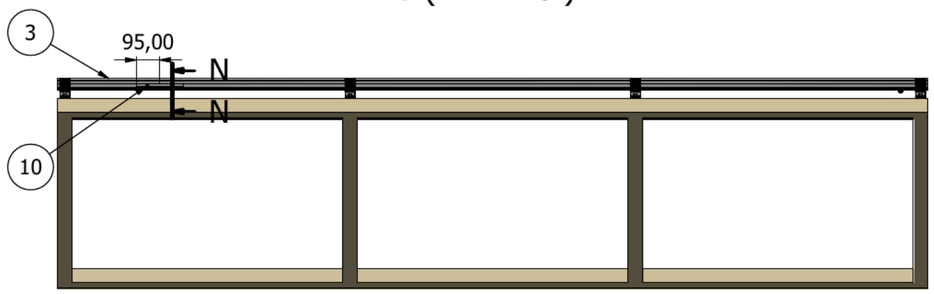

N-N (1 : 1)

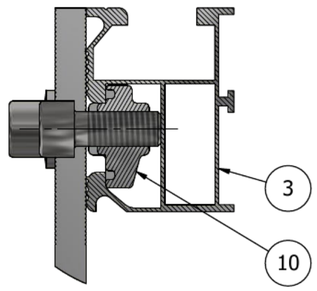

P-P (1 : 1)

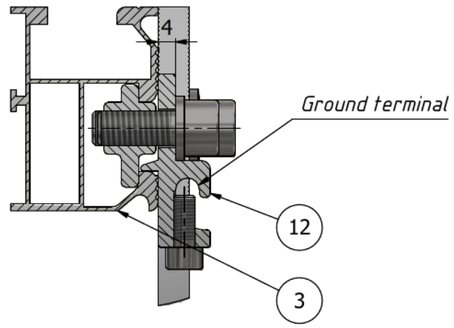

Resposible dept.	Technical reference	Document types	Document status	
VOLTS energy storage	Created by: Sample	Assembly drawing	Standard solution	
	Approved by: Sample	Title: Cascade of PV modules 1x3 psc angle-24 (1 pcs - 590W)	Rev: 1	Date of issue: Sample date
			Lang:	Sheet: 3/4

R (1 : 17.5)

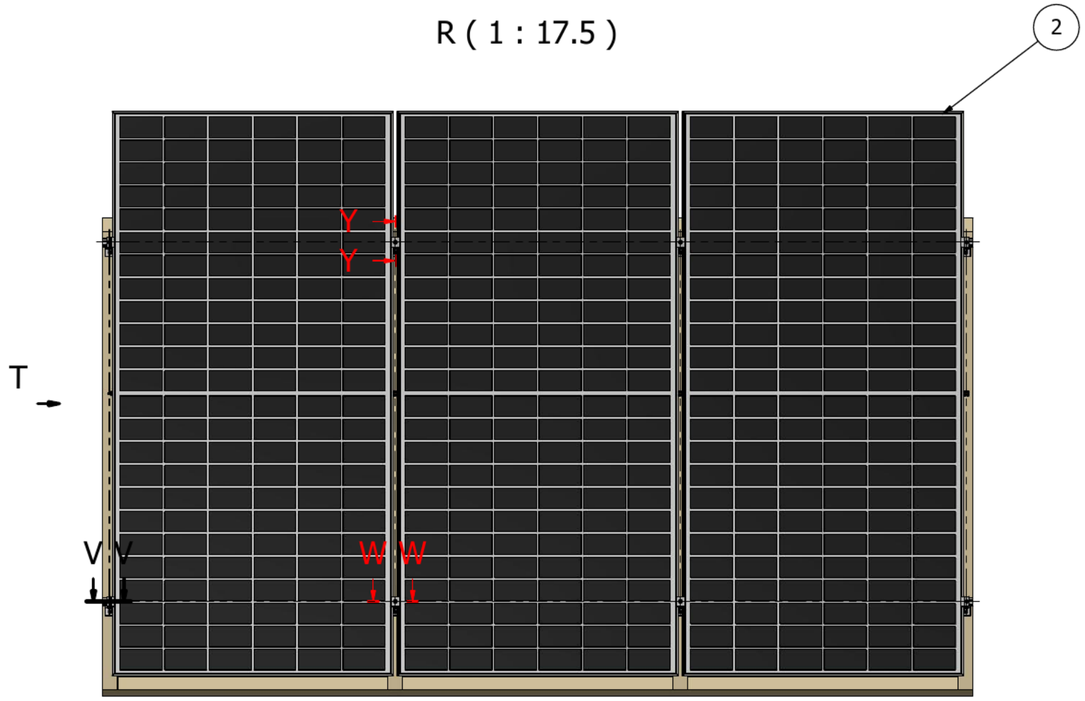

T (1 : 17.5)

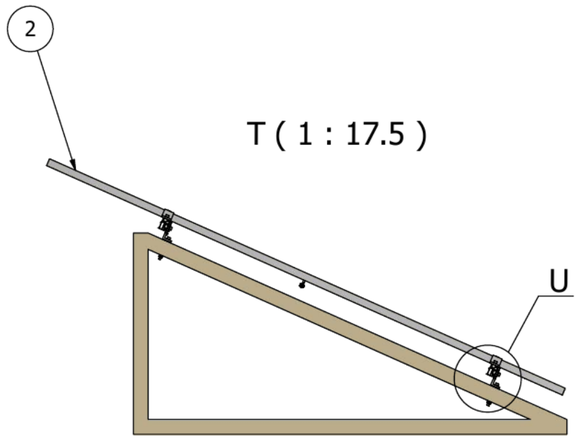

U (1 : 2.5)

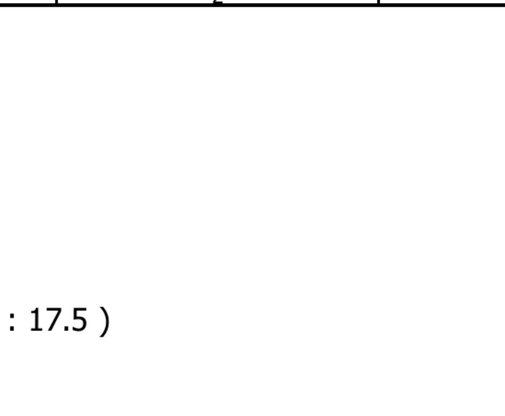

Y-Y (1 : 2.5)

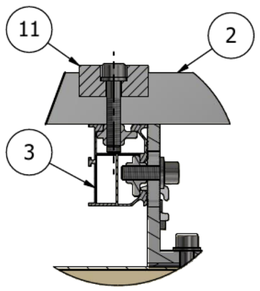

W-W (1 : 2.5)

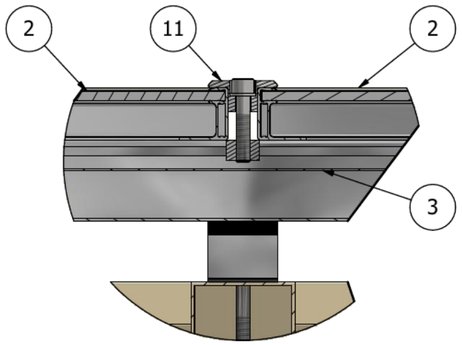

V-V (1 : 2.5)

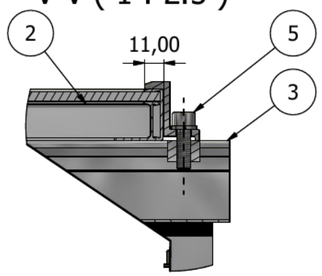

Resposible dept.	Technical reference	Document types Assembly drawing	Document status
VOLTS energy storage	Created by Sample	Title Cascade of PV modules 1x3 psc angle-24 (1 pcs - 590W)	Standard solution
	Approved by Sample	Rev: 1 / Date of issue: Sample date / Lang / Sheet: 4/4	