Operating Manual

For hydraulic system and assemblies

CYMAX

Privacy policy

This document is the intellectual property of CYMAX AG, Industriestrasse 14, 8618 Oetwil am See and without their consent may be copied or disclosed to third persons.

The content and works provided on these pages are subject to Swiss copyright law. The reproduction, modification, distribution or any kind of exploitation outside the limits of copyright require the written consent of teh author or creator. Copies are permitted only for private, non-commercial use. Soweit die Inhalte auf dieser Seite nicht vom Betreiber erstellt wurden, werden die Urheberrechte Dritter beachtet. Insofar as the content on this site is created by the operator, the property rights of third parties. Should you become aware of copyright infringement, we ask for a hint. Upon notification of violations, we will remove the content immediately.

© Copyright by CYMAX AG, CH-8618 Oetwil am See, 2011

Contents

Privacy policy **1**
Contents **2**
Introduction **4**
General remarks of the manual *4*
Storage of this manual *4*
Target group *4*
Terms and definitions *4*
Terms and conditions of warranty *4*
Description of unit **5**
Introduction *5*
Purpose *5*
Partly completed machinery *5*
Safety regulations **6**
Pictograms *6*
Basic principles *6*
General *7*
Authorized person *7*
Product-specific hazards *7*
Additional hazards *8*
Emergency *9*
Design and funktion **10**
Design *10*
Functional description *10*
Safety an monitoring devices *10*
Description of modules *10*
Monitoring **12**
Warning Signals *12*
Monitoring devices and displays *12*
Operating modes *12*
Putting into operation **13**
Introduction *13*
Install / Setup *13*
Assembly *13*
Recommended oil grades *15*
Initial startup *17*
Operation **19**
Introduction *19*
Operating the system *19*
Malfunctions *19*
Maintenance **21**

Introduction *21*
Maintenance schedule *21*
Operating media / Auxiliaries *22*
Maintenance work *23*
Maintenance log *27*
Service information *27*
Corrective maintenance / Repairs 28
Introduction *28*
Troubleshooting *28*
Corrective maintenance *28*
Shutdown / Storage 29
Introduction *29*
Shutdown procedere *29*
Storage *29*
Packing / Transportation 30
Introduction *30*
Packing *30*
Transportation *30*
Disposal 33
Packing *33*
Operating media *33*
System *33*
Terms / Glossary 34
Appendix 37
Contained document *37*

Introduction

General remarks of the manual

This manual contains instructions and notes on the transportation, installation, operation, maintenance, shutdown and disposal of the hydraulic system.

The manual contains the following sections:

- General operating instructions
- Product specifications

Knowledge of the safety specifications described in this manual is mandatory before starting work on the system.

Storage of this manual

It is important that personnel doing work around or on the system have unlimited access to the manual.

CYMAX AG therefore advises users to keep the manual in the immediate vicinity of the system; or at a place which is known to the personnel and where they have access to.

Target group

Personnel qualification is an important factor to ensure safety and a condition for operating the system properly.

Before performing any activities on or around the system, personnel must fulfill minimum qualification requirements. Qualification requirements, if any, are stipulated at the beginning of each Chapter; they must be adhered to.

Terms and definitions

Explanations of the terms used are stipulated in the glossary.

Terms and conditions of warranty

Terms and conditions of warranty and the related services shall fulfill Swissmem guidelines. All other agreements have to be specified in writing, signed and attached to this document.

Description of unit

Introduction

The system is illustrated in the layout drawing in the appendix to this manual.

The type plate is clearly visible from the operator side or is mounted on the oil reservoir cover.

The scope of supply corresponds to the specifications or to the agreement which was defined as the basis for the award of order. A test report was produced based on the non-specific test performed as per EN 10 204.

The manufacturer's declaration of conformity with the European machine directive 2006/42/EG is contained in the appendix to this manual.

Purpose

The system converts electrical energy into hydraulic energy to generate rotary and linear movements for various consumers. The hydraulic control system designed for this purpose comprises an interaction of different valves and components.

The hydraulic scheme shows how the consumers are activated by the system. This system must be used for the purpose for which it was designed. This corresponds to the range of functions in this description.

The system may only be used for the functions contained in the range of functions.

Use of the system is not considered to be in accordance with the regulations, if it is operated under the conditions listed below:

- Under non-permissible ambient conditions.
- A function is not corresponding to the hydraulic scheme.
- Extended by unforeseen functions without the knowledge of CYMAX AG.
- Safety specifications which are not heeded.

Partly completed machinery

Das Hydraulikaggregat ist ausschliesslich dazu bestimmt, in eine Maschine bzw. Anlage eingebaut oder mit anderen Komponenten zu einer Maschine bzw. Anlage zusammengefügt zu werden. Das Produkt darf erst in Betrieb genommen werden, wenn es in die Maschine bzw. die Anlage, für die sie bestimmt ist, eingebaut ist und diese die Anforderungen der EG-Maschinenrichtlinie vollständig erfüllt.

„Eine unvollständige Maschine ist eine Gesamtheit, die fast eine Maschine bildet, für sich genommen aber keine bestimmte Funktion erfüllen kann. Ein Antriebssystem stellt eine unvollständige Maschine dar. Eine unvollständige Maschine ist nur dazu bestimmt, in andere Maschinen oder in andere unvollständige Maschinen oder Ausrüstungen eingebaut oder mit ihnen zusammengefügt zu werden, um zusammen mit ihnen eine Maschine im Sinne dieser Richtlinie zu bilden."

Definition aus der EG-Maschinenrichtlinie 2006/42/EG entnommen.

Safety regulations

Pictograms

All information in this manual and their meaning with respect to safety or which merit special attention are marked by the following pictograms or warning symbols:

RISK!

All places in this manual marked by this pictogram/note are intended to alert the user to hazards which may result in serious physical injury or death.

WARNING!

All places in this manual marked by this pictogram/note are intended to alert the user to hazards which may result in malfunctions or damage to the system.

CAUTION!

All places in this manual marked by this pictogram/note indicate instructions which must be followed in order to avoid emissions which are potentially harmful to humans and/or the environment.

All places in this manual marked by this pictogram/note are intended to warn the user about possible sources of alfunctions or those which affect liability.

All places in this manual marked by this pictogram/note „electric power“ are intended to warn the user about dangerous electrical voltage.

Basic principles

The system was manufactured according to state-of-the-art production methods and inspected by our quality assurance personnel. All generally acknowledged safety regulations have been applied. Nevertheless, hazards may still arise under certain circumstances.
The system may only be operated when in proper working condition and as instructed in this manual and especially in compliance with the safety regulations.
The system may only be used for the purpose specified in this manual (see Section PURPOSE). Any change in purpose must first be approved by CYMAX AG.
Modifications and changes to the system are strictly forbidden. Modifications may only be performed under the direction of CYMAX AG.

General

Safety devices must not be dismantled, bridged or bypassed.
Find more detailed information under chapter „safety and monitoring devices."

RISK!

The system in this form is a module of a superior system and has no safety-related switch-off procedures (e.g. EMERGENCY STOP function).
Personnel safety is not ensured in this condition.
The system manufacturer shall ensure that the prescribed switch-off procedures are provided and that they are illustrated sufficiently.

Authorized person

Work described in this manual may only be performed by authorized persons.
Authorized persons are those who fulfil the qualifications described in the introduction to the corresponding Chapters.
CYMAX AG shall not be liable for any claims which occur as a result of operation, maintenance or repairs performed by non-authorized persons.
The manual and the safety regulations shall be read and understood by persons authorized to work on the system.
All persons who come into contact with the system and accessories are obliged to report any faults or malfunctions occurring on or around the system.
The generally acknowledged industrial safety regulations must be followed.

RISK!

Use of drugs of any kind impairs the ability of operating/service personnel to judge and act.
This can cause inadmissible maloperations which may lead to physical injuries.
The use of drugs of any type before and during work is therefore strictly prohibited.

Product-specific hazards

The system is electrically operated. This fact must be taken into account when handling the system, and due caution must be exercised when making adjustments.

CAUTION!

The hydraulic fluid used in the circuit is environmentally hazardous.
Groundwater and eco-systems may be impaired drastically.
To prevent leakage of oil, particular care must be taken when filling and draining the oil.

RISK!

The hydraulic fluid used in the circuit is harmful to health.
Avoid any direct contact with the skin since this may result in allergic reactions.
After direct contact with the skin, immediately wash the areas using soap. If persons show any allergic reactions when using mineral oil, they should wear gloves.

RISK!

Fire hazard.

The hydraulic fluid used in the circuit is flammable.
Under no circumstances may heat sources exceeding 100°C come into contact with the system and oil-conveying components.

Additional hazards

Operating medium
Filling the circuit with oil other than the prescribed oils (e.g. emulsions and aggressive media) may result in damage or leakage.
If the hydraulic circuit is required to be compatible with operating media other than the prescribed, the system can be retrofitted accordingly by CYMAX AG.

Extraneous media
Prevent the hydraulic fluid from coming into contact with extraneous media such as coolants, cutting oil, water, etc.
This hazard exists mainly with semi-open or open hydraulic circuits.

WARNING!

Hydraulic oil can be contaminated by extraneous media.
Hydraulic system components may be damaged and/or the oil reservoir may overflow.
Such contamination must be avoided (using seals, separating basin, etc.) or suitable monitoring media and methods shall be provided.

Water cooler
If an oil / water cooler is used in the system, this may result in the leakage of water into the oil circuit. Therefore an electrical oil level switch is a standard component installed in such systems.

Interior oil reservoir cleaning
The points listed below must be observed when using solvents during assembly, maintenance and repair work:

RISK!

Fire hazard.

Solvents are easily flammable.
Do not smoke in the room where solvents are used and avoid naked flames or heat sources exceeding 100°C.

RISK!

Solvents are deleterious to health.

The breathing of solvent vapours will impair a person's ability to react and can lead to permanent health injury.
Solvents may only be used in rooms with sufficient ventilation.

Exterior oil reservoir cleaning
The system may not be cleaned using high-pressure water cleaners.

WARNUNG!

Water in oil.

Water may enter the oil reservoir when cleaning.

Only use the prescribed cleaning agents and/or solvents.

Emergency

In any emergency situation, the system must first of all be de-energized (power switch OFF).
After switch-off, accumulators may continue to be a hazard source or a safety function.

Detailed instructions on how to proceed in this case must be used by the system manufacturer.

Fire
The hydraulic oil is flammable. The gases generated when hydraulic oil is burning are noxious. Before attempting to put out a fire, therefore, use the extinguishing materials provided and take the appropriate safety precautions.

Design and function

Design

The system consists of an oil reservoir, a pump unit and one or several control unit(s).

Functional description

The pump unit (B) driven by an electric motor draws the hydraulic medium (oil) from the oil reservoir (A) and generates the flow rate and pressure required by the consumers.
The control unit (C) controls the consumer's functions.

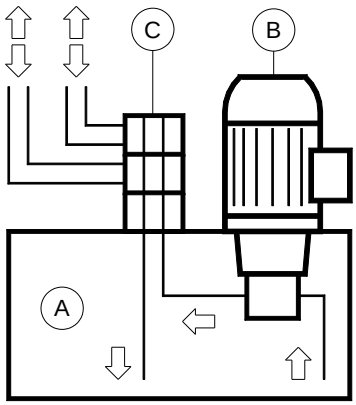

(A) Oil reservoir

(B) Pump unit

(C) Control unit or control block

The system manufacturer shall describe the interaction an the function processes between the system and the consumers.

Safety an monitoring devices

The following safety and monitoring devices are used on hydraulic systems:

- Oil gauge display (or/and oil-level switch)
- Motor protection switch on the system and if necessary,
- Thermostat, temperature switch
- Electrical oil level switch
- Pressure switch

Description of modules

The reservoir (A) contains the hydraulic fluid and is the assembly base for the power unit (B), the control units (C), accumulators, filters and maintenance facilities.
The power unit (B) includes the electric motor, coupling, bellhousing and hydraulic pump.
The control unit (C) may be an application specific block with fully integrated hydraulic circuit. It may be assembled on top of the reservoir or installed separately. The standard control unit usually installed, is a modular system, which includes:

- Longitudinal stacking (1-3) (mainly vertical installation)
- Vertical stacking (4-5) (mainly horizontal installation)

Longitudinal stacking includes three different kinds of elements:

- Basic modules (1) with standard circuits for the pump control.
- Stacking plates (2) as assembly base for the directional control valves (5) on the sandwich plates (4).
- Stacking modules (3) are integrated circuits, including standard control features for consumers or upstream controls.

Vertical stacking includes the following elements:

- Sandwich plates (4) are functional modules which are installed between the stacking plates and the directional control valves (5). They control and direct flow and pressure in the supply and consumer lines.
- Directional control valves (5) are spool or poppet valves on top of the vertical stacking. They control consumer or auxiliary functions.

The schematic below shows the arrangement of the longitudinal and vertical stacking system.

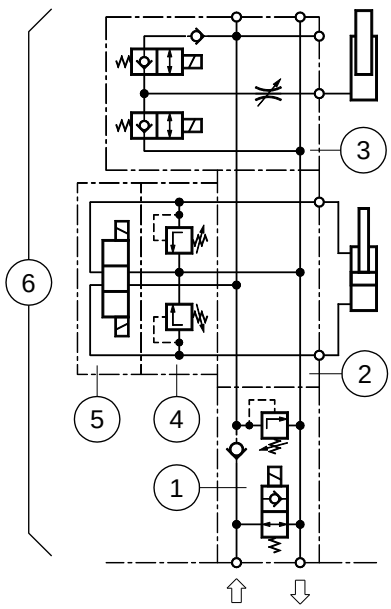

(1) Basic module

(2) Stacking plate

(3) Stacking module

(4) Sandwich plate

(5) Directional control valve

(6) Control unit

Monitoring

Warning Signals

If accumulators are used in the system, the following warning label is attached in the immediate vicinity of the hazard zone.

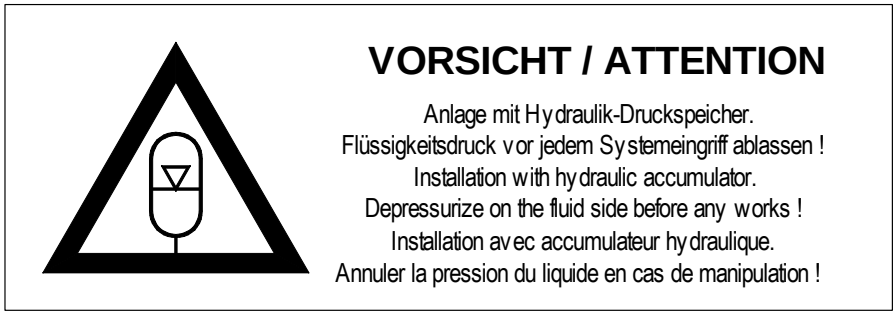

WARNING!

If the manual is strictly observed, the risk of injury from the accumulator is excluded.

Monitoring devices and displays

For system characteristics, refer to the appendix hydraulic scheme.

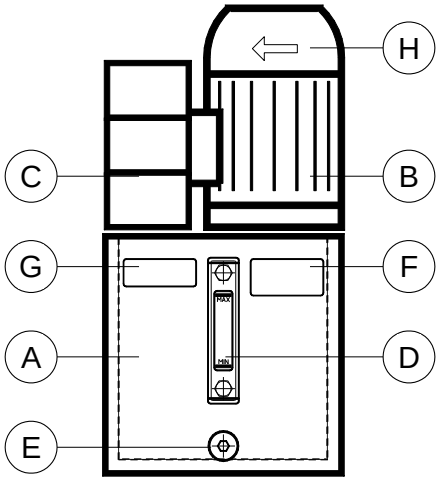

(A) Oil reservoir

(B) Pump unit

(C) Control unit

(D) Oil level display

(E) Oil drain plug

(F) Type plate

(G) Warning label accumulator

(H) Rotation direction arrow

Operating modes

The operating mode of the system is user-specific. The system manufacturer shall therefore describe the operating procedures and their functionality.

Putting into operation

Introduction

Improper installation and assembly may cause damage to the system and/or its consumers.
The system may be equipped with one or several accumulators. Due care must therefore be exercised when handling the system.
Please note, that national or local regulations apply first and foremost. In special cases, company-specific regulations may also be observed.
For personnel qualifications for the various special works, please refer to the following section.

Install / Setup

For installation work, the following personnel qualifications are required:
The system must be set up and installed by a mechanical or service engineer with experience in hydraulics or personnel trained by CYMAX AG.
Due care must be taken when transporting the system.
Only means of transport with sufficient load-bearing capacity may be used for this purpose. Persons may not stand under the load during transportation.
The packaging materials mainly comprise wooden parts. Proper disposal of these materials is described in chapter « Disposal ».
The system requires an electrical power supply. Find more detailed information in the hydraulic scheme.
The system must be set up in a properly ventilated area where waste heat can dissipate upwards or sideways.
Failing this, precautions must be taken to allow the waste heat of the system to dissipate in another way (e.g. fan) to provide a supply of fresh air.
The system must be installed in such a way that the oil level is clearly visible and properly accessible for the maintenance personnel.
Place the system in such a way that it is protected from splash water.

Assembly

The documents listed below are required for assembly:

- Operating manual
- Layout drawing (see appendix)
- Hydraulic scheme (see appendix)
- Partlist (see appendix)

For personnel qualifications for the various special works, please refer to the relevant sections.

Hydraulics
For hydraulic assembly, the following personnel qualifications are required:
The system must be set up and installed by a mechanical or service engineer with experience in hydraulics or personnel trained by CYMAX AG.
When assembling the hydraulics, the following points must be observed:

- Pipe connections and hydraulic hoses must be cleaned, using a suitable solvent and subsequently blasted with compressed air, before they are assembled.
- During assembly, the specifications (e.g. tightening torques) of the fitting manufacturer must be followed.
- During assembly, the specifications (e.g. bending radii) of the hydraulic hose manufacturer must be followed.

- When cleaning the hydraulics, non-linting cloths should, be used. The cleaning of threads by cleaning wool is prohibited because their fibrous residue can cause the system to malfunction.
- The threaded connections are marked by a letter code, which corresponds to that, shown in the hydraulic scheme.
- The size of the threaded connections is specified on the layout drawing or hydraulic scheme in the appendix.

First oil filling

As a rule, the system is transported without an oil filling. Filling the system with oil for the first time must therefore be carried out as follows:

1) Check, if oil reservoir is empty.
2) Make sure, that the drain plug on the reservoir bottom is screwed tightly.
3) Free the filling port by removing the breather cap.
4) Fill the oil reservoir only by means of the top up or filter station with at least 10 mic of prefiltered oil.
5) Use only an oil grade in accordance with the comparison table in the following chapter or special regulations.
6) When filling the system, check the oil level. The oil level must be visible at/in the upper oil gauge or it must be at max. level of the oil gauge / dip stick.
7) Re-attach breather cap at filling port.
8) Enter the oil grade of the first filling together with the date and signature into the maintenance log.

Only use oil that are recommended by CYMAX AG (see next pages „recommended oil grades“). Others, not on the list named oils can affect the function and can therefore lead to disturbances in the hydraulic system.

Recommended oil grades

MARKE (alphabetisch)	Temperaturbereich +10 bis +55°C	Temperaturbereich +20 bis +65°C
	Qualität	
	HLP nach DIN 51524, Teil 2 ISO-VG 32 (32mm²/s bei 40'C)	HLP nach DIN 51524, Teil 2 ISO-VG 46 (46mm²/s bei 40'C) ISO-VG 68 (68mm²/s bei 40'C)
AGIP	AGIP OSO 35	AGIP OSO 45
ARAL	Aral Vitam HF 32, Aral Vitam DE 32	Aral Vitam HF 46, Aral Vitam DE 46
AVIA	AVILUB Hydrauliköl RSL 32, AVILUB Hydrauliköl HVI 32	AVILUB Hydrauliköl RSL 46, AVILUB Hydrauliköl HVI 46
BLASER	BLASOL 157	BLASOL 158
BP	BP Energol HLP 32, BP Energol HLP-D 32	BP Energol HLP 46, BP Energol HLP-D 46
CASTROL	CASTROL HYSPIN ZZ 32	CASTROL HYSPIN ZZ 46
CHEVRON	Chevron Rando HD 32	Chevron Rando HD 46
MOTOREX	COREX HLP 32	COREX HLP46
ELF	ELF Elfona DS 32	ELF Elfona DS 46
ESSO	NUTO H 32	NUTO H 46
FINA	FINA HYDRAN 32	FINA HYDRAN 46
FUCHS	RENOLIN MR 10, RENOLIN B 10	RENOLIN MR 15, RENOLIN B 15
Panolin	Panolin HLP 32	Panolin HLP 46
Panolin Synth	Panolin HLP Synth 32	Panolin HLP Synth 46
MOBIL	Mobil D.T.E. 24	Mobil D.T.E. 25
STATOIL	Hydra Way HVXA 32	Hydra Way HVXA 46
SHELL	SHELL Tellus Oil 32	SHELL Tellus Oil 46
SUNOCO	SUNVIS 832-WR	SUNVIS 846-WR
VULCOBE	HLP ISO32	HLP ISO 46

Electrics

For electric/electronic work, the following personnel qualifications are required :

Electrician or officially authorized specialist.

Connecting

1) Check if the electric work voltage conforms to the mains voltage.
2) Check the electric motor connection (star-delta).

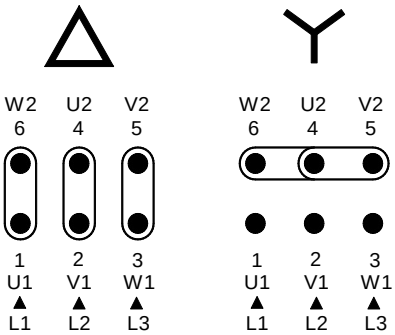

3) Connect the terminals to the electric motor and provide with a mains connection in compliance with national regulations. For electrical specifications refer to the type plate on the electric motor or the parts list in the appendix.
4) The correct direction of rotation is marked on the motor by an arrow ← on the side of the fan housing. Check direction of rotation by short interrupt start up. Change leads if necessary.

WARNING!

It is dangerous to operate the electric motor with wrong direction of rotation.

If the motor rotates in the wrong direction for longer than a few seconds, it will damage the hydraulic pump.

Connecting controls and monitoring devices

All connections to the electrical controller must comply with the electrical circuit scheme of the system manufacturer.

1) Check whether the control voltage corresponds to the supply voltage.
2) Connect all solenoid valves to the electrical control unit.
3) Connect all controls and monitoring devices (pressure switches, limit switches, thermostats, filter contamination displays, etc.) to the control unit.
4) If proportional valves are used, they must be adjusted and aligned by an electrician and/or CYMAX AG.

Mechanical interfaces

Securely bolt the hydraulic unit to the floor or to fixtures intended for this purpose.

Initial Startup

For initial start up, the following personnel qualifications are required:
The system must be set up and installed by a mechanical or service engineer with experience in hydraulics or personnel trained by CYMAX AG.

Checks before start up

Before starting up the system, check whether the

1) System is installed properly (as specified in chapter „assembly“).
2) Mains and motor voltages correspond.
3) Electric motor is connected properly (star or delta connection).
4) Control and supply voltages correspond.
5) Consumers (cylinder and motors) are connected properly.
6) Oil filling in the oil reservoir complies with the applicable regulations.

Startup

1) Connect the hydraulic circuit to the power supply of the system.
2) Switch on the system.
3) Allow the hydraulic circuit to idle for 2-3 minutes.
4) If necessary, reduce the setting of the flow control valves to a low flow rate, if it is hazardous for the consumers to be operating at full speed.
5) If there is a risk of consumer's collision with one another, the pressure should be reduced at the relief/reducing valve.

Do not tamper with lead-sealed pressure valves and valves marked with red varnish.

6) Before operating the consumers, read section „air bleed“. Purge system the according to the regulations when starting the consumers.
7) Operate the consumers one after the other.

RISK!

Hydraulic cylinders may travel out at high force.
A person located in the direction of the rod travel may be injured seriously.
Persons are prohibited from standing in their immediate vicinity.

8) Check the operating pressure on the pressure gauge and, if necessary, adjust the pressure valve as appropriate.

Final adjustment may not exceed the value indicated on the type plate.

9) During the start-up procedure, check the system repeatedly for leakages. If necessary, tighten fittings and valves.
10) Check the oil level and, if necessary, fill reservoir with oil when the cylinders are fully retracted. (For cylinder operation, withdraw oil from the oil reservoir to fill cylinders for the first time.)

CAUTION!

Loosing oil
Before repeatedly topping up the oil volume during operation, first of all check, if a leakage has occurred.

11) Check the oil temperature. If the temperature exceeds the values of the technical details, the system must be switched off. Faults causes are listed in chapter "malfunctions":
    - If a fault cause cannot be located, consult CYMAX AG.
12) After an operating period of 1 to 2 minutes, adjust the flow control vales to the required values one after the other.
13) Reset the pressure valves to the original value.
14) For high operating requirements (servo system) or extensive installations, change the filter after 10 to 20 operating hours (see chapter „maintenance").

Air bleed
Purge the air of the system from the pump towards the consumers. If the pump is a radial piston or vane design, fill up pump body and aspiration line with oil before start-up.

Cylinder air bleed

1) Extend and retract cylinders several times without load at low speed. Open air bleed connections if available and check air bubbles of the out coming oil. Close air bleed connections, when clear oil appears.

CAUTION!

Seals may be damaged by Diesel effect.
If air inside the cylinder will be compressed at high velocity, sealings may be irreparable affected by high temperature (spontaneous combustion).
Make sure, that no air is inside the cylinders.

2) After air bleeding, the consumers may be operated

Checks after putting into operation
Start the power unit under no load if possible. A short circuit by a dump valve provides free flow from the pump back to the reservoir. In case, there is no dump valve available, the pressure setting of the relief valve may be reduced to zero. Make sure, that the original pressure setting will be maintained after start-up procedure.
To avoid malfunctions, the following checks must be made by the operator:

1) Temperature rise of the oil within 1-2 hours. In case of high devition, consult section "malfunctions".
2) Oil level, when consumers are in their extreme positions. Top up oil, when the max indication will not be reached. Make sure, that no overflow appers by returning volumes.

Operation

Introduction

For operation, the following personal qualifications are required:
The system must be set up and installed by a mechanical or service engineer with experience in hydraulics or personal trained by CYMAX AG.
Before putting the system into service, check all the control functions by manual operation, if possible.

Operating the system

If the hydraulic control unit is designed for this purpose, switch the pump flows to circulation before switching on the system. This ensures that the motor starts under no load.

To avoid malfunctions, the following checks must be performed by the operator on an ongoing basis:

1) Temperature rise
2) In case of a deviation from the normal state, follow the procedure as described in section „malfunctions“.
3) Checking the oil level if the oil level is below the max. level, top up oil (see chapter “topping up oil”).
4) If noise is excessive, see procedure in section “malfunctions”.

Malfunctions

Temperature rise

If the temperature exceeds the values prescribed, the system must be switched off. An excessive rise in temperature may occur for the following reasons:

- Restrictions inside hydraulic circuit, high pressure drops.
- Excessive ambient temperature.
- Insufficient ventilation (no heat exchange).
- External temperature sources, e.g. heat radiation.
- Relief valve set too low or too high.

In case the problem cannot be located, contact CYMAX AG.

Noise

Unusual noise may occur during operation for a variety of reasons, e.g.

- Restriction inside the circuit → Roaring
- Cavitation of pump → Screeching
- Vibrations during cylinder stroke (Stick-slip) → Rattling
- Fast opening of valves → Shocks
- Air inclusions by insufficient bleeding → Rushing
- Vibrations of pressure or flow control valves → Resonance

If unusual noise occures, check the following:

- Oil level when the cylinders are retracted.
- Oil quality (viscosity, contamination).

- If it contains condensed water.
- The rise of temperature since the noise occurred.

Put the system into service again. If the noise has not disappeared, analyze and report the following:

- First occurence of noise.
- Noise sources.
- Changes of valve and pump settings.
- Visible signs of defects.
- Quality of hydraulic oil.

If any sources of noise cannot be eliminated, consult the technical department of CYMAX AG.

Maintenance

Introduction

For maintenance, the following personnel qualifications are required:
Maintenance personnel authorized by the operator (owner) with experience or training in maintaining hydraulic systems.
Before intervening in the hydraulic system, it must be switched off.
If installed accumulators are not discharged electrically, discharge them manually.

Strictly observe the safety specifications as described in chapter "design and function" and the maintenance plan to perform maintenance free of danger.

Maintenance schedule

The following maintenance schedule must be respected:

Checks	***Interval***	***Comments***	***Corrective Measures***
Oil filling	weekly	No check when electronically monitored	Top up if necessary
Oil temperature	weekly	No check when electronically monitored	If the temperature is too high, determine cause of fault. Proceed according section „troubleshooting"
Filter contamination display	weekly	No check when electronically monitored	If necessary, change filter element
Consedered water separation inside reservoir - during normal operation - in case of high fluctuations in temperature	Annually Every 3 month	Analyze oil	Change oil in case of negative analyze result. Procced according section „checking and draining off condensed water.
Accumulator nitrogen pressure.	Every 6 month		Proceed according section „check nitrogen pressure"
Damages to hydraulic hoses	Annually	Eliminate causes of abrasion damages	In case of exterior damages, exchange the relevant hoses.
Leakages at fitting	Annually		Retighten fittings
Leakages at stacking systems	Annually		Tighten screws and nuts check seals and change if damaged.

Maintenance work	*Interval*	*Comments*	*Corrective measures*
Analyze oil	Annually		Take out oil sample and analyze.
Change filter - during normal operation	Every 2000 h or if contamination is indicated	Perform before oil change	Change the cartridge and/or the element. Proceed according section „change filter“
Change oil	Every 2000 h or if analysis returns negative result	Perform after oil change	Proceed according section „oil change“
Interior oil reservoir cleaning	When changing oil		Before refilling with oil
Exterior oil reservoir cleaning	Annually or request	For cleaning agent, see section „operating media“	Especially important for displays and maintenance elements
Change breather cap (normal operation) - in case of high contamination in air	Every 2 years Annually		Replace or clean filter element or breather cap

Operating media / Auxiliaries

Hydraulic oil

The system is operated on grade D.T.E 24 mineral oil. Only oil qualities as given in the separate table of recommended oil grades (see appendix) or as specified may be used.

Different brands of oil are formulated differently. Mixing different hydraulic oils may be detrimental to their individual properties.

Avoid mixing different brands or grades of mineral oil..

If necessary to change brand or product for any particular reason. A complete oil change must be made.

Before filling other fluids (e.g. HFA, HFB, HFC, HFD fluid, rapeseed oil or biologically degradable oils) in the system instead of prescribed D.T.E 24 mineral oils, contact CYMAX AG regarding clarification of compatibility.

Solvents

Only use CFC-free solvents which do not discolour. CYMAX AG recommends the use of the following solvents: Petrol or INDURAI 67 by Amstutz (Switzerland). The country-specific regulations for the use of solvents generally apply.

List of materials

For maintenance and / or servicing work, the following materials are required:

- 1 set of fork wrenches
- 1 set of allen wrenches

- 1 torque wrench
- Pressure gauge with measuring device
- Solvent or cleaning agent (petrol) which does not discolour
- Cleaning cloth (non-linting)
- Topping up refill/filter unit (recommended)
- Filling and testing device for accumulator service
- Nitrogen vessel for accumulator nitrogen filling

Maintenance work

Checking and draining off condensed water

Modern hydraulic oils have a relatively high water absorption capacity. In case of high air humidity and heavy temperature fluctuations, water can be separated in oil.

To check whether water has accumulated inside the oil reservoir, proceed as follows:

1) Switch off the system and wait for approx. 15 minutes to allow any water to settle to the bottom of the oil reservoir.
2) Slowly loosen the drain plug in the oil reservoir unti fluid is discharged.

CAUTION!

Collect the waste fluids in a suitable oil reservoir, and dispose of them properly.

3) Observe the fluid flowing out of the oil reservoir until only oil is discharged.
4) Re-tighten the drain plug.
5) Check the oil level and, if necessary, to up the oil reservoir.

Topping up oil

To top up oil reservoir with oil, proceed as follows:

1) Check to see if leakages occur in the hydraulic system. Eliminate sources of leakage.
2) Open the fililng port vy detaching the breather cap (in exceptional cases, filter plug).
3) Report the oil quality in the maintenance log. Only mineral oil of the same grade may be used to top up the oil reservoir.

Mixing different brands or grades of mineral oil may cause the system to malfunction.

4) Top up the oil reservoir with at least 10mic of prefiltered oil through the filling port.
5) When filling the system, check the oil level in teh oil gauge ort he dip stick. The oil level must be visible at max.mark / upper oil gauge or dip stick.
6) Re-attach breather cap (filler plug) in filling port.

Oil change

To change the oil, two procedures have to be followed:

CAUTION!

When changing the oil and cleaning the system, the national regulations relating to the disposal of oils and solvents must be obeyed.

Procedure 1 (manual oil change)

1) Open the drain plug, drain the content of the oil reservoir into a suitable oil reservoir and dispose the oil properly.
2) Detach the maintenance cover on the side of the oil reservoir and clean the oil reservoir using an approved solvent. If a maintenance cover is not installed, take off the main cover.
3) After cleaning, re-attach the maintenance cover (oil reservoir cover).
4) Free the filling port by removing the breather cap (in exceptional cases, filler plug).
5) Fill the oil reservoir with at least 10mic of prefiltered oil. Use only oil grades in accordance with the comparison table in the appendix or specific indications.
6) When filling the oil reservoir with oil, keep an eye on the oil level (see sight glass on oil reservoir or dip stick). The oil level must be visible in the upper oil gauge or it must be at max. mark on the dip stick.
7) Re-screw breather cap (filler plug) in filling port.
8) Replace the filter element after every oil change.

Procedure 2 (oil change with refill/filter station)

1) Open the main cover and insert the aspiration neck of the refill/filter unit into the oil reservoir.
2) Discharge hydraulic oil in a suitable container by using refill/filter unit and dispose hydraulic oil properly.
3) Remove the maintenance cover on the side of the oil reservoir and clean the oil reservoir using an approved solvent. If a maintenance cover is not mounted on the side, clean the oil reservoir from above through the cover opening.
4) After cleaning, re-mount the maintenance cover.
5) Fill the oil reservoir with at least 10mic of prefiltered oil. Use only oil grades in accordance with the comparison table in the appendix or specific indications.
6) When filling the oil reservoir with oil, keep an eye on the oil level (see sight glass on oil reservoir or dip stick). The oil level must be visible in the upper oil gauge or at Max. mark on the dip stick.
7) Re-screw breather cap (filler plug) at filling port.
8) Replace the filter element after every oil change.

Changing filter

If the filter needs to be changed, proceed as follows:

- Switch off the system (de-energize).

Return filter cartridge

1) Unscrew the filter cartridge (item 7.0) from the oil reservoir cover counterclockwise and dispose used cartridge properly.

2) Check if the seal is properly seated in the filter cartridge and not damaged.
3) Screw filter cartridge manually clockwise.

Return line filter

1) Dismount cover/housing of return line filter.
2) Remove filter element and dispose properly.
3) Insert new filter element.
4) Re-assemble cover/housing again.

RISK!

Pressure line filter

1) Dismount cover/housing of pressure line filter.
2) Remove filter element and dispose properly.
3) Check seals on filter element and on filter housing.
4) Insert new filter element.
5) Re-screw cover/housing again..

Druckspeicher

Before manipulating the accumulator, make sure that:

- The system has been switched off for long enough to allow the temperature of the oil and all individual components to drop down to +10°C to +30°C.
- The permissible temperature is +10°C bis +30°C.

See chapter „ safety specifications“.

Regarding the instructions for servicing the accumulator, the main operating elements are shown in the scheme below and can be verified by means of the corresponding reference numbers.

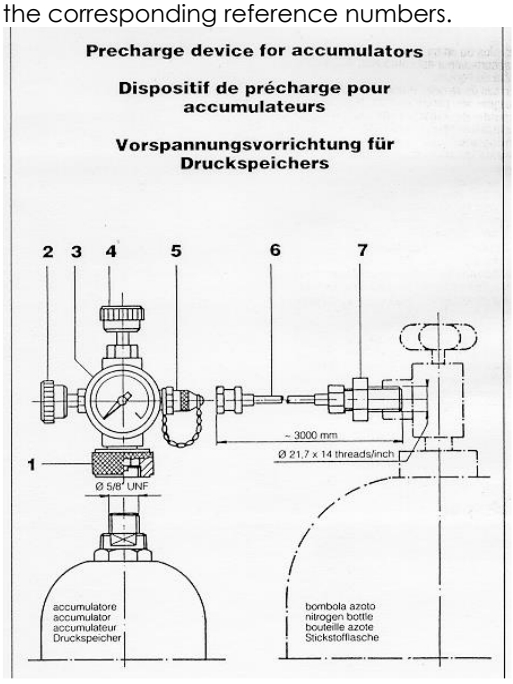

(1) Befestigungszwinge / fixing ring
(2) Abblaseventil / bieed screw
(3) Manometer / pressure gauge
(4) Handrad für Ventilöffnung / handwheel
(5) Vorspannungsverschraubung mit Kappe / precharge connection with cap
(6) Schlauch / hose
(7) Flaschenverschraubung / bottle connection

CAUTION!

Testing nitrogen pressure

There are basically 2 procedures for testing the accumulator nitrogen pressure. The first procedure supplies a more accurate result, but is the more complex.

Procedure 1

1) Unscrew protective cap on accumulator counterclockwise.
2) Screw the filling and testing device onto the exposed thread on the accumulator using the fixing ring (1).
3) Turn the handwheel (4) clockwise.
4) Read off the nitrogen pressure on pressure gauge (3) and compare with the value specified in the hydraulic scheme.
   - If the value is too low, proceed as described in Section "increasing nitrogen pressure".
   - If the value is too high, proceed as described in Section "reducing nitrogen pressure".
5) Turn the handwheel (4) counterclockwise.
6) Remove the filling and testing device from the accumulator by releasing the fixing ring (1).
7) Re-mount the protective cap on the accumulator.
8) Stow away the filling and testing device again into case.

Procedure 2

1) Load the accumulator hydraulically.
2) Reduce the accumulator pressure by slowly opening the manual operated valve on power unit side.
3) Check the pressure on the pressure gauge closely during the release phase.
4) As soon as the accumulator charge pressure (oil side) falls below the nitrogen pressure, it immediately drops to 0 bar. The last value immediately before the pressure drop corresponds to the nitrogen pressure.

Reducing nitrogen pressure

5) Unscrew protective cap on accumulator counterclockwise.
6) Screw the filling and testing device onto the exposed thread on the accumulator using the fixing ring (1).
7) Turn the handwheel (4) clockwise.
8) Check the nitrogen pressure on pressure gauge (3) and compare with the value specified in the hydraulic scheme.
9) Slowly open the bleed screw (2) counterclockwise until the nitrogen pressure reaches the desired value.
10) Close the bleed screw (2) clockwise.
11) Turn the handwheel (4) counterclockwise.
12) Remove the filling and testing device from the accumulator by releasing the fixing ring (1).
13) Re-mount the protective cap on the accumulator.
14) Stow away the filling and testing device again into case.

Increasing nitrogen pressure

1) Unscrew protective cap on accumulator counterclockwise.
2) Screw the filling and testing device on to the exposed thread on the accumulator using the fixing ring (1).
3) Screw the bottle connection (7) into the nitrogen bottle.
4) Detach the protective cap (5) from the measuring connection.
5) Connect the hose (6) to the precharge connection (5) and to the bottle connection (7) of the nitrogen vessel.
6) Close the bleed screw (2) clockwise.
7) Turn the handwheel (4) clockwise.
8) Slowly open the handwheel on the nitrogen vessel and read the nitrogen pressure gauge (3) continuously.
9) When the nitrogen pressure reaches the value of +5% as prescribed on the hydraulic scheme, close the tap of the nitrogen bottle again.
10) Turn the handwheel (4) counterclockwise.
11) Open the bleed screw (2) counterclockwise and wait until the remaining nitrogen has escaped.
12) Close the bleed screw (2).
13) Turn the handwheel (4) clockwise and monitor the nitrogen pressure on gauge (3).
14) If the nitrogen pressure is correct, turn the handwheel (4) counterclockwise.
    - If the nitrogen pressure is not correct, reduce or increase it as described above.
15) Disconnect the measuring hose (6) from the measuring connection (5) of the filling and testing device and from the bottle connection (7) on the nitrogen bottle.
16) Remove the bottle connection (7) from the nitrogen bottle.
17) Re-mount the protective cap on the measuring connection (5).
18) Remove the filling and testing device from the accumulator by releasing the fixing ring (1).
19) Re-mount the protective cap on the accumulator.
20) Stow away the filling and testing device again into case.

Maintenance log

Please refer to the appendix of this manual for maintenance log.

Service information

For information on the system, please contact the system manufacturer (for address, see cover sheet).

Corrective maintenance / Repairs

Introduction

For corrective maintenance and repairs, the following personnel qualifications are required:

Corrective maintenance and repairs may only be performed by specially trained personnel. They must be in a position to identify systems due to the hydraulic scheme. They must also have profound knowledge concerning handling and repair of accumulators, valves, cylinders, pumps, motors, etc.

Troubleshooting

Malfunctions occurring during normal operating condition are described in Section "malfunctions". If malfunctions (for example with consequential damage) occur, proceed as described in section "corrective maintenance".

Corrective maintenance

The following customer services listed below will help during troubleshooting and can carry out or advise corrective maintenance work.

In case of malfunctions, damage or defects to system components, contact the authorities below in ascending priority.

- In-house corrective maintenance or maintenance service
- Representation/customer service of system manufacturer (supplier)
- Authorized hydraulic expert of a third company in the region
- Representation/customer service of component manufacturer
- CYMAX customer service on behalf of system manufacturer or operator

Defective electric motors, valves, electric components and accumulators may only be replaced as complete component.

Shutdown / Storage

Introduction

Before starting to dismantle the hydraulics, external loads on comsumers must be eliminated and safety supports provided.

Shutdown procedere

If the system is to be shut down, proceed as following:

1) Turn off power supply and isolate system from mains.
2) Release the accumulator pressure manually.
3) Discharge the nitrogen pressure in the accumulator using the filling and testing device.
4) Open the drain plug, drain the oil reservoir into a suitable containner and dispose it properly.
5) Keep oil inside the cylinders for conservation purposes or release it into a suitable container.
6) Clean the oil reservoir and the overall system using a suitable, approved cleaning solvent.

CAUTION!

When changing the oil and cleaning the system, the national regulations relating to the handling and disposal of oils and solvents must be observed.

Storage

Provided that all measures necessary for shutdown have been taken, no special requirements need to be observed.

If the system is needed more than 2 years after having been shut down, a regular start-up procedure must be carried out.

In this case, the system must be cleaned, use solvent if necessary.

Depending on the kind/place of storage, brittleness of seals may have occurred. CYMAX AG recommends to replace the seals.

Packing / Transportation

Introduction

Before packing the system, check if the operating voltage of the electric motor and the control voltage of the solenoids conform to the values used in the country of destination.

Packing

When packing the system, the following points should be noted:

- Before packing, drain the oil from the oil reservoir into a separate barrel.
- A wooden crate (European standard size pallet, crate) is sufficient for the packing.
- Make sure that the system is fixed in all directions. Take care that the system cannot be damaged from the outside (impact damage during transportation).

Transportation

WARNING!

There is a danger of overturning and falling of the unit if not properly securing the anchor points.

- Check always the stability of the anchor points, before you move the hydraulic unit.
- Tighten all screw-attachment points by hand until it stops.
- Anchor points which are defective have to be replaced and no longer use.
- The intend or recommended lifting points are shown in the assembly drawing.

Types of anchor points

Anchor points fixtures and appliances are in the form of loops, which are by a screw or welded joint attached to the hydraulic unit.

They are used to transport or lifting of the hydraulic unit.

It can be applied the following attachments:

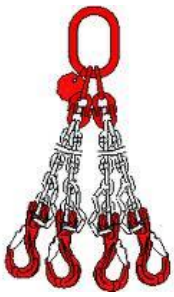

CAUTION!

By overloading and improper posture, the risk of health problems is the manual transport.

- Use appropriate tools for heavy loads such as risers.
- Use only appropriate lifting and handling techniques.
- The human body is different loads. Estimate the load limits of the persons involved realistic one.

Be sure to comply with the applicable national laws and the cargo regulations relating to transportation by air, rail and road.

WARNING!

Transport with forklifts and similar equipment transport

The hydraulic unit may fall down when not properly executed transportation overturn or modify ist position of control.

- Forklift or similar transport equipment should be used only by treained personnel.
- You can attach the unit so as to fall in motion forces not overturn or modify ist position of control.
- Gravity of the load has to be estimate correctly.
- The unit may lie around during transport no loose parts.

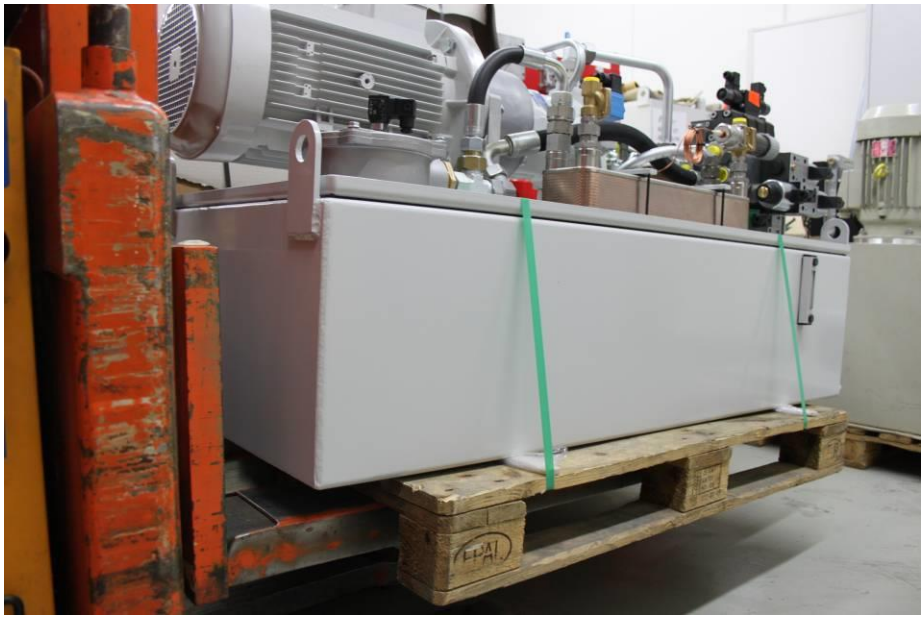

WARNING!

Transport by crane

The hydraulic unit may fall when not properly executed transportation overturn or modify its position of control.

- Attach the lifting eyes so that you can secure a stable centre of gravity.
- The unit may not move out of the intended location. Secure the best possible and bring them to the appropriate backup location.

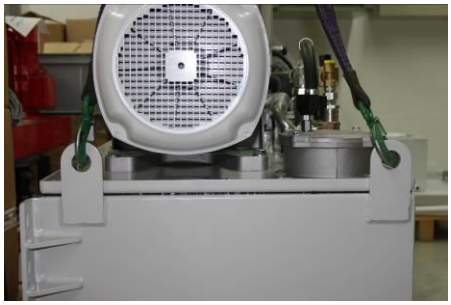

The transport takes place only with cranes using proper fateners (see „types of anchor points“).

- Use only reccomended posts and stop points of the set of CYMAX AG.
- Make sure that when lifting the unit, the mounted components are not damaged.
- Place the lower edge of the unit coming in contact / fiction with the strap, a soft pad.
- Raise, lower and transport the moved mass slowly and cautiously.
- Lift the mass from the floor to the extent only as is necessary.

Accumulator

If the system is sent by air freight, note that shipping companies have different requirements relating to the shipment of accumulators. The shipping company in question should be contacted in this respect.

If it is necessary to discharge the nitrogen pressure, a note of this must be kept in the maintenance log. Refer to section “reducing nitrogen pressure”.

Disposal

Packing

The shipping and packing materials must be used of as follows:

- Return the European standard size pallet to the freight forwarder or supplier.
- Remaining wooden packing drums or crates can be re-used. Otherwise, they must be sent to a recycling or dump plant.

Operating media

Mineral oils should either be sent to an appropriate treatment facility or must be disposed as hazardous waste. Refer to safety notes in section „general hazards“.

System

The system itself does not contain any critical materials. These are mainly steel, aluminium, copper and several sealing materials. Steel, aluminium and copper can be recycled (resmelting). Please observe the national regulations relating to the disposal of these materials.

Terms / Glossary

Accumulator	Vessel with nitrogen filling and bladder or diaphragme to separate and store oil volume under pressure, also to compensate energy pikes and leakages or for cushioning of pulsations.
Analogic valve	General term for proportional and servo control valves with continious response on a reference signal.
Aspiration line filter	Oil filter installed upstream to the pump in aspiration line.
Booster, pressure amplifier	Generates a pressure level in a secondary circuit which is a constant ratio higher than that in the primary circuit. The flow rate is reduced by the same ratio.
Bypass	Parallel routed hydraulic line by orifice, check or directional valve bypassing the main function.
Check valve	Hydraulic element enabling oil to flowin one direction only.
Circuit transmission	Hydrostatic pump/motor drive where return line of the motor becomes directly aspiration line of the pump. semi-open Standard equipment on hydraulic power units. Aspiration of the pump is from the reservoir and the return lines are collected back to it. open Used for lubrication systems or hydrostatic/ hydrodynamic bearings. The oil must return to _reservoir by gravity or auxiliary pump.
Consumer	Hydraulic actuator components such as hydromotors, rotary actuators and cylinders.
Control voltage	Electrical supply for control of solenoid valves.
Directional control valve	Spool or poppet valve, which directs the oil flow to the consumers or other hydraulic device and determines mainly movement direction.
Drain plug	Plug on reservoir bottom.
Emulsion	Heavily flammable, water-containing hydraulic fluid of group HFA (oil-inwater) or HFB (water-in-oil) emulsions.
(Oil-) Filter	Retains particles floating in a hydraulic fluid up to a certain size. Divided into aspiration, pressure and return line filters.
Filter element	Inside the filter which retaines contamination
Filter cartridge	Spin-on filter which can be exchanged as disposable element.
Flow control valve	Limits flow rate to a firmly specified value load-independent.
2-way flow control valve	Adjustable restrictor valve with compensator to provide constant flow independent of system pressure or loadvariation. With or without bypass check valve.
3-way flow control valve	Pressure compensated flow which regulates a primary flow rate. and leads the remaining oil to tank.
Priority flow control valve	Devides a flow into a constant priority and a secondary remaining flow. Both ports may be connected to different consumers. Flow divider Divides a flow rate.
Flow divider	Divides a flow rate in several equal or unequal partial flows on a rotative displacement principle. Or: Mechanically hydrostatic multible volume displacement. Mostly on the base of a rotative actuator principle (gear or piston motor).
Flow fuse	Responds to an excessive flow rate by closing the actuator port. Avoids load from falling down in case of a linebreak.
Flow rate	Converts a _flow rate into a linear movement and the operating pressure into a force. • Single-acting cylinder (plunger cylnder) • double-acting cylinder (differential cylinder)

- Telescopic cylinder

Hydraulic fluid	Transmission fluid in a hydraulic system. Divided into mineral oil, waterglycol, phosphat-ester, emulsion.
Hydraulic motor	Converts a flow rate into a rotation movement and performs a torque by the operating pressure.
Hydraulic pump	Converts the rotation energy of a motor drive into a flow rate and generates the operating pressure.
Hydraulic unit	Hydraulic system/drive for which this manual applies.
Leakage	Internal or external drain by mechanical clearance or unsufficiant sealings.
Level switch	Electrical monitoring of oil level.
Machine	Environment in which the system is used.
Maintenance cover	Cover mounted on the _reservoir ensuring maintenance work through the reservoir wall.
Manual pump	Manually operated hydraulic pump.
Mineral oil	hydraulic fluid based on mineral oil of the category D.T.E 24.
Nitrogen pressure	Pressure of nitrogen filling in accumulator.
Oil gauge	Monitoring device mounted on the reservoir enabling the optical check of the oil level.
Oil level	Upper position of the oil filling into the reservoir.
Orifice	Calibrated restriction for reduced flow. Mainly used for cushioning and piloting.
Overcenter valve	Pilot operated counterbalance valve, which provides load-independent velocity control, smooth deceleration and leakage-free load holding.
Phosphate-Ester	Heavily flammable synthetic _hydraulic Fluid of group HFD on ester basis.
Poppet valve	Controls the direction of the oil flow. Due to the ball or poppet design no or very low leakage appears.
Pressure control valve	Basically controls or limits the pressure on pump or consumer side.
Pressure filter	Oil filter installed in a pressure line.
Pressure gauge	Hydraulic pressure monitoring device.
Pressure gauge valve	Shut-off valve for pressure gauge protection.
Pressure unloading valve	Piloted pressure control valve, which allows flow to tank or consumer port, when external pressure exceeds the adjusted value.
Pressure reducing valve	Pressure control valve, which provides reduced and constant pressure in a defined circuit without influence on the primary system.
Pressure relief valve	Pressure control valve which limits the maximum system or consumer pressure.
Pressure sequence valve	Pressure control valve, which allows flow to a defined consumer port, when the operating pressure exceeds adjusted value.
Pressure switch	Pressure operated electrical switch, which generates a signal at an adjustable setting.
Proportional control valve	Pressure, flow and directional valve whose hydraulic output signal is proportional to the electrical or mechanical input signal.
Refill-filter station	Separate system which is used to discharge, fill and clean the oil during maintenance.
(Oil-) Reservoir	Container for the hydraulic fluid, which is the structural basis for the system.
Restrictor valve	Adjutable throttle, non compensated. With or without bypass check valve.
Return line filter	Oil filter installed in a return line.
Secondary line filter	Provides oil filtering in an independent secondary oil circuit, in the same system.

Servo valve	Multiple stage high response directional control valve with torque motor, converts a small electrical input signal into a hydraulic output signal.
Shuttle valve	Check valve with 2 inlet ports and 1 outlet. The outlet is allways onnected to the inlet port with higher pressure level.
Spool valve	Controls the direction of the oil flow. The spool design creates a permanent leakage.
System	The complete functional scope described in this manual.
Swivel drive, Rotary actuator	Converts a flow rate into a rotation movement with limited rotation angle.
Thermostat	Electrical or hydromechanical monitor to keep the oil temperature constant.
Water glycol	Heavily flammable synthetic hydraulic fluid of group HFC on glycol basis.
Zero overlap Proportional control valve	Fast response proportional directional valve for closed loop position control with failsave position. Operated by a solenoid or linear motor.

Appendix

Contained document

The appendix to this manual contains the following documents:

- Maintenance plan
- EG – Delaration of incorporation
- Prüfprotokoll Industrial Hydraulik System
- Hydraulic scheme
- Layout drawing
- Technical partlist