CASTCONNEX®
innovative components for inspired designs

HOW TO SPECIFY:

UNIVERSAL PIN CONNECTOR(EN)™

GETTING READY: Visit www.castconnex.com and download

A. CAST CONNEX Universal Pin Connector (UPC)(EN) Datasheet

B. CAST CONNEX Universal Pin Connector (UPC)(EN) 2D and 3D Assets (CAD/BIM)

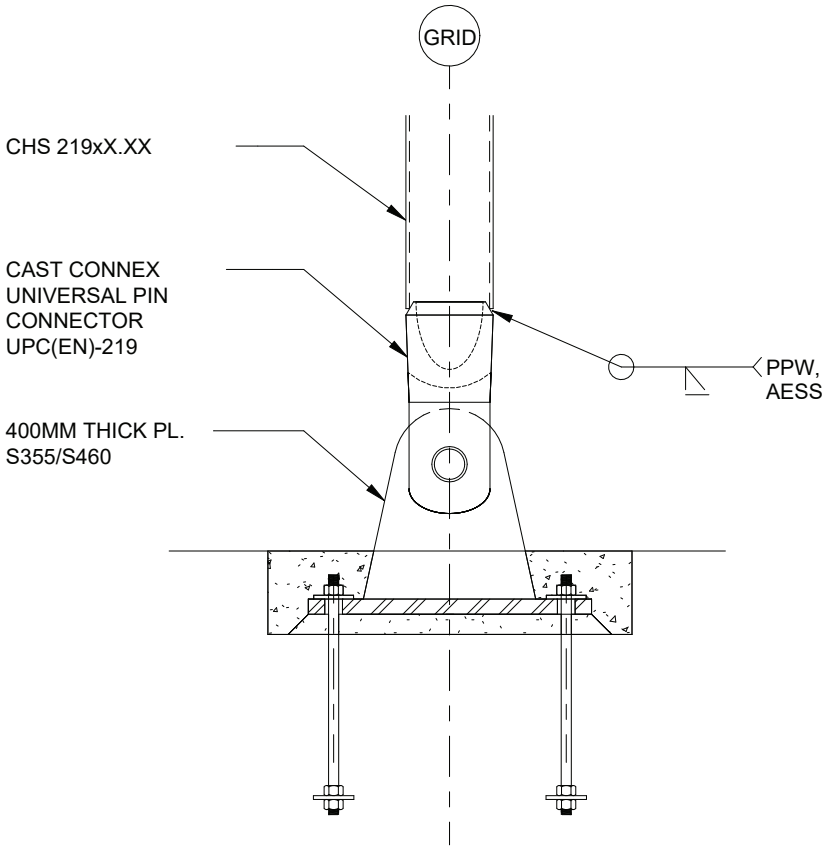

PRODUCT SELECTION

Select a UPC(EN) with an outer diameter (D) that matches the outer diameter of the connecting CHS. Refer to the UPC(EN) Datasheet for casting sizes and pin diameters.

If a corresponding UPC(EN) size is not listed, adjust the CHS size to match, or contact a CAST CONNEX representative to explore alternative solutions.

LOADING

Confirm the axial strength of the UPC(EN) meets or exceeds the design loads. Refer to the UPC(EN) Datasheet for a summary of the capacity checks used in the determination of the design resistances reported in the design table.

If the UPC(EN) capacities are not sufficient, contact a CAST CONNEX representative to explore alternative solutions.

CONNECTION

Design and specify the weld between the UPC(EN) and CHS. Include architecturally exposed structural steel(AESS) requirements, if applicable. Refer to the UPC(EN) Datasheet for a typical assembly.

Detail the gusset plate shaping and call out the selected plate material grade and thickness (t_g) corresponding with the selected UPC(EN) size. Refer to the UPC(EN) Datasheet for the dimensional requirements of the gusset plate.

DESIGN DRAWINGS & SPECIFICATION

Include a detail of the connections to the UPC(EN) on the design drawings. Use the UPC(EN) 2D and 3D Assets (CAD/BIM) to get started.

Call out: “CAST CONNEX UNIVERSAL PIN CONNECTOR UPC(EN)-XXX”

Include Structural Cast Steel Components specification language in the contract specification document for the UPC(EN). Sample specification language is available upon request at www.castconnex.com.