CASTCONNEX®
innovative components for inspired designs

HOW TO SPECIFY:

UNIVERSAL PIN CONNECTOR™

GETTING READY: Visit www.castconnex.com and download

A. CAST CONNEX Universal Pin Connector (UPC) Datasheet

B. CAST CONNEX Universal Pin Connector (UPC) 2D and 3D Assets (CAD/BIM)

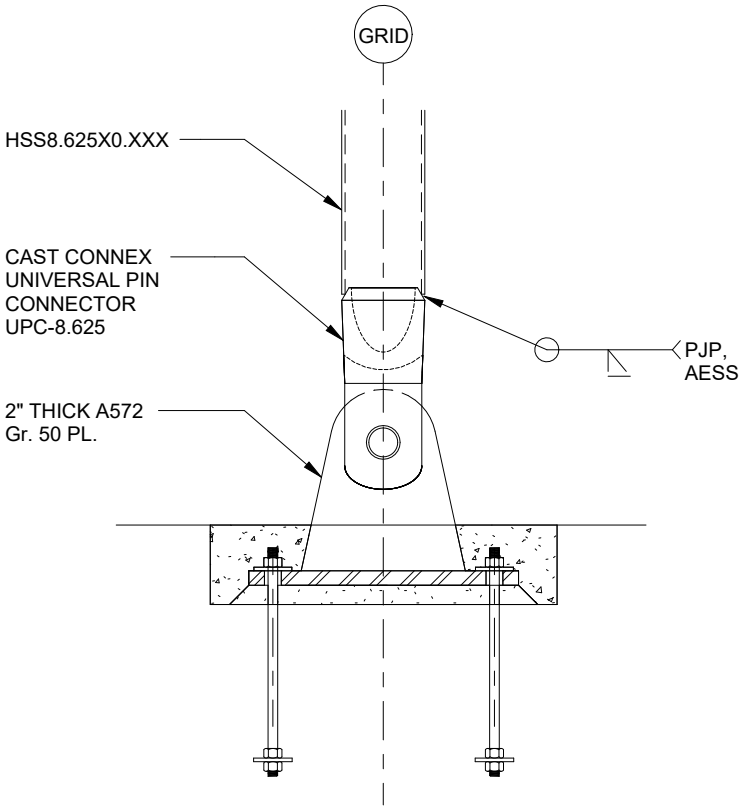

PRODUCT SELECTION

Select a UPC with an outer diameter (D) that matches the outer diameter of the connecting round HSS or Pipe. Refer to the UPC Datasheet for casting sizes and pin diameters.

If a corresponding UPC size is not listed, adjust the HSS or Pipe size to match, or contact a CAST CONNEX representative to explore alternative solutions.

CONNECTION

Design and specify the weld between the UPC and round HSS or Pipe. Include architecturally exposed structural steel (AESS) requirements, if applicable. Refer to the UPC Datasheet for a typical assembly.

Detail the gusset plate shaping, and call out the selected plate material grade and thickness (t_g) corresponding with the selected UPC size. Refer to the UPC Datasheet for the dimensional requirements of the gusset plate.

LOADING

Confirm the axial strength of the UPC meets or exceeds the design loads. Refer to the UPC Datasheet for a summary of the capacity checks used to determine the nominal strengths reported in the design table.

If the UPC capacities are not sufficient, contact a CAST CONNEX representative to explore alternative solutions.

DESIGN DRAWINGS & SPECIFICATION

Include a detail of the connections to the UPC on the design drawings. Use the UPC 2D and 3D Assets (CAD/BIM) to get started.

Call out: "CAST CONNEX UNIVERSAL PIN CONNECTOR UPC-XX.XX"

Include Structural Cast Steel Components specification language in the contract specification document for the UPC. Sample specification language, suitable for Division 05 - Metals, is available upon request at www.castconnex.com.