CASTCONNEX®
innovative components for inspired designs

HOW TO SPECIFY:

ARCHITECTURAL TAPER(EN)™

GETTING READY: Visit www.castconnex.com and download

A. CAST CONNEX Architectural Taper (ART)(EN) Datasheet

B. CAST CONNEX Architectural Taper (ART)(EN) 2D and 3D Assets (CAD/BIM)

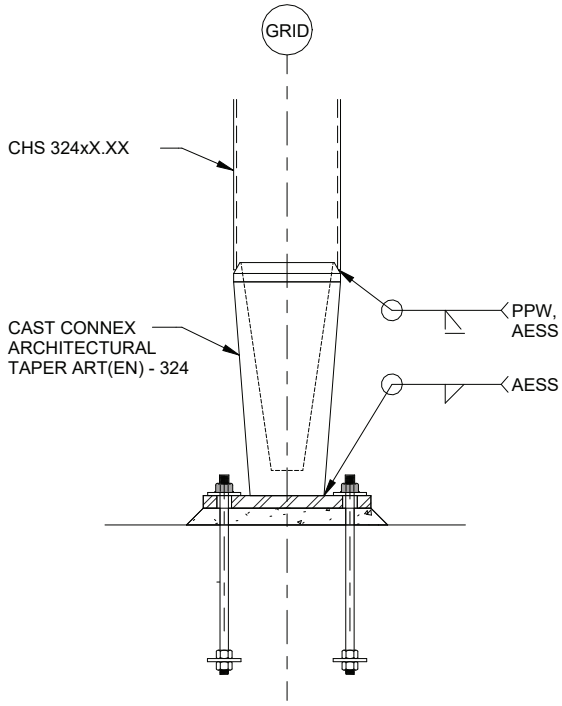

BASE DETAIL

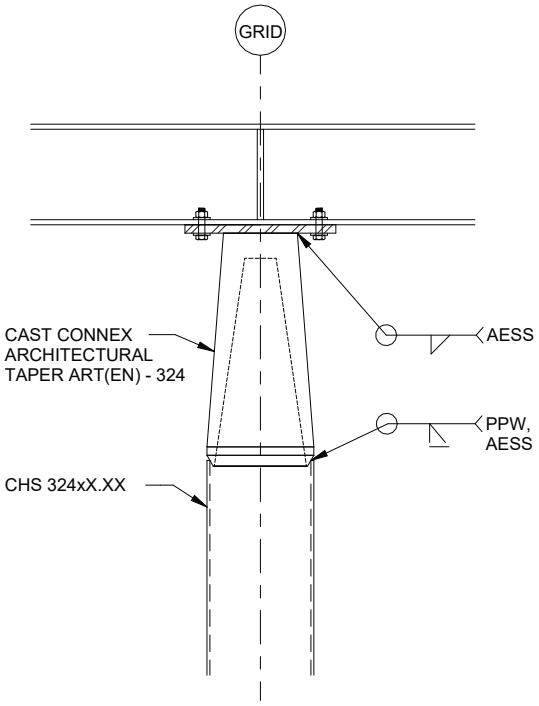

TOP DETAIL

PRODUCT SELECTION

Select an ART(EN) with a D_1 outer diameter that matches the outer diameter of the connecting CHS. Refer to the ART(EN) Datasheet for casting sizes.

If a corresponding ART(EN) size is not listed, adjust the CHS size to match, or contact a CAST CONNEX representative to explore alternative solutions.

CONNECTION

Design and specify the weld between:

1) the ART(EN) and CHS, and
2) the D_2 end of the ART(EN) and the adjacent structural element.

Include architecturally exposed structural steel (AESS) requirements, if applicable. Refer to the ART(EN)Datasheet for a typical assembly.

LOADING

Confirm the available axial, flexural, and shear strengths of the ART(EN) meet or exceed the design loads. Refer to the ART(EN) Datasheet for a summary of the capacity checks used in the determination of the design resistances reported in the design table.

Consider ART(EN) strengths are for single-action loading. Consider combined action of forces.

DESIGN DRAWINGS & SPECIFICATION

Include a detail of the connections to the ART(EN) on the design drawings. Use the ART(EN) 2D and 3D Assets (CAD/BIM) to get started.

Call out: "CAST CONNEX ARCHITECTURAL TAPER ART(EN)-XXX"

Include Structural Cast Steel Components specification language in the contract specification document for the ART(EN). Sample specification language is available upon request at www.castconnex.com.